Science Fair

20-IN-1 ELECTRONIC



COME WITH ME TO THE WORLD OF NOR GATES, FLIP-FLOPS, TRANSISTORS AND LEDS...

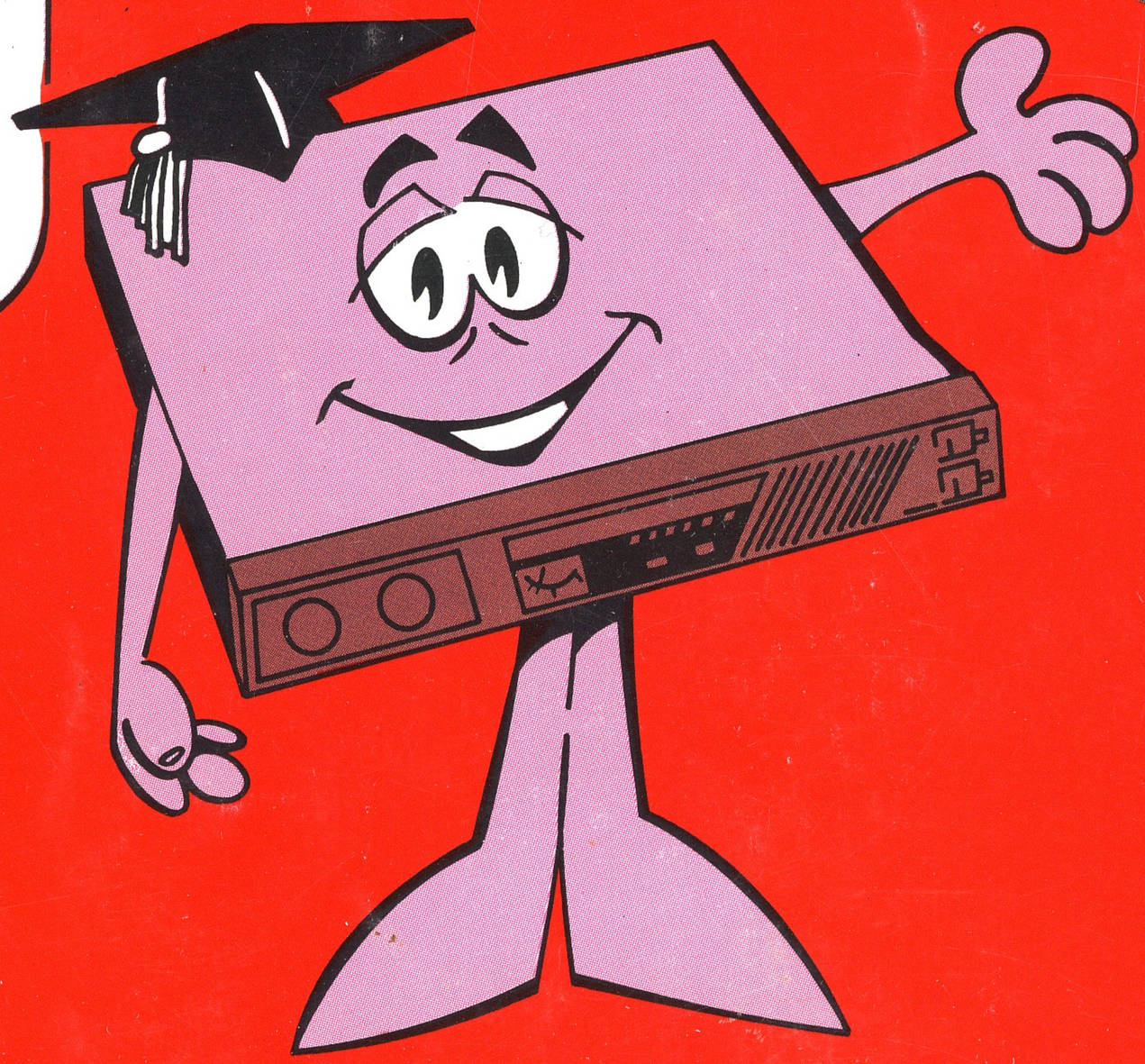

ONIC PROJECT KIT

28-265

Recommended for children 10 years of age or older

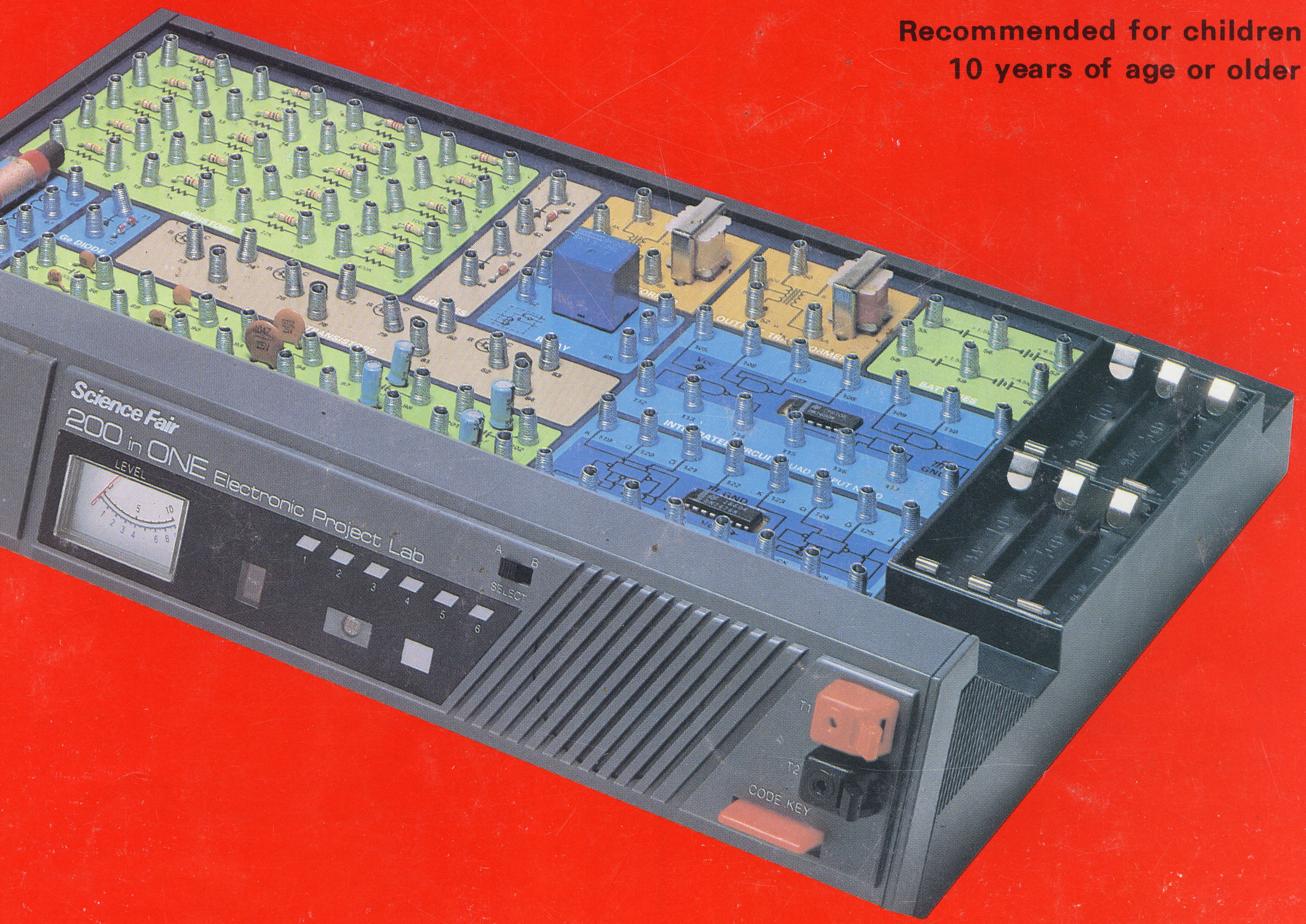

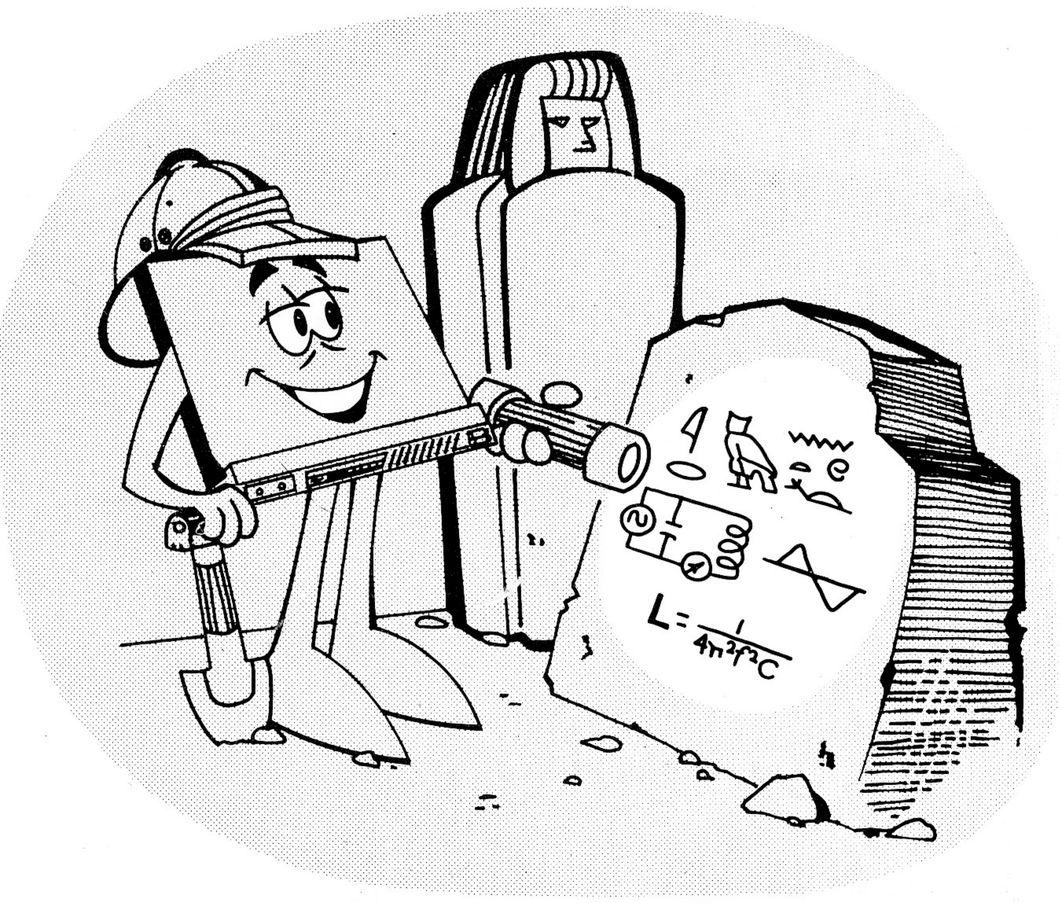

You never know what you'll find next when you start exploring electronics with your 200-in-1 Kit!

...and enjoy these 200 ele

I. SURPRISE AND GAME PROJECTS (Here's A Sample of What Electronics Can Do . . .)

1. Wheel of Fortune 8
2. The Noisy Light 8
3. Electronic Candle 9
4. Rain Detector 9
5. Earsplitter 10
6. Pencil Lead Organ 10
7. The Electric Human 11
8. The Electrosonic Human 11
9. Electric Birthday Cake 12
10. Quick Draw 12
11. Quick Draw II 13
12. Electronic Safecracking 13
13. UFO Invasion 14
14. Tug of War 14
15. Shot in the Dark 15
16. Burglar Alarm 15
17. SOS Alert 16
18. Target Range 16
19. "Catch" the Eight 17
20. Marching LEDs 17
21. Turn Signal Flasher 18
22. Leapin' LEDs! 18
23. Lights Out 19

II. BACK TO THE BASICS (of Electricity and Electronics)

24. Light Telegraph 20
25. Frontier Telegraph 20
26. Introducing the Resistor 21
27. Parallel Resistors 21
28. Secret Resistance 22
29. A Variable Resistor 22
30. Capacitors in Series and Parallel 23
31. The Electronic Gas Tank 23
32. Discharge Timer 24
33. Light Dimmer 24
34. The Quick Capacitor 25
35. Electronic Timer 25
36. Capacitors and Oscillators 26
37. A Variable Capacitor 26
38. Resistors and Capacitors Together 27
39. Resistors and Capacitors Together II 27
40. Meet the Diode 28
41. Voltage Drop 28
42. Voltage Regulator 29
43. LED – A Special Diode 29

© 1987 InterTAN CANADA LTD.

ctronic adventures!

44. How a Transformer Works 30
45. A Chopper Circuit 30
46. An AC Simulator 31
47. Electronic Buzzer 31
48. Photometer 32
49. Electronic Jigsaw Puzzle 32
50. Night Light 33
51. The Light Switch 33
52. Electronic Elephant 34
53. Capital Letter Displays 34
54. Small Letter Displays 35
55. Numeric Displays 35
56. Meet the Transistor 36
57. Transistors as Switches 36
58. Electricity from Sound 37
59. Electric Money 37

III. ELECTRONIC "BUILDING BLOCKS" (That We Build Big Circuits From)

60. A Push-Pull Amplifier 38
61. Understanding Oscillators 38
62. A Push-Pull Oscillator 39
63. An Inverter Circuit 39
64. Meet the OR Circuit 40
65. Introducing the AND Gate 40
66. Using the NOR Gate 41
67. Meet the NAND Gate 41
68. How a Multivibrator Works 42
69. A "One Shot" Multivibrator 42
70. An R-S Flip-flop 43

IV. PUTTING ELECTRONICS TO WORK (Some Practical Stuff ...)

71. Sound Scooper 43
72. Liquid Conductivity Tester 44
73. Super-Sensitive Photometer 44
74. Motion Detector 45
75. Two-Tone Buzzer 45
76. Variable Capacitor Oscillator 46
77. Variable RC Oscillator 46
78. Electronic Metronome 47
79. Door Alarm 47
80. Frequency Shift Oscillator 48
81. Code Practice Unit 48
82. Light/Sound Code Practice Unit 49
83. Strobe Light 49
84. Noisy Strobe Light 50
85. CdS-controlled Oscillator 50

86. Shot in the Dark II 51
87. Does Money Talk? 51

V. RADIO CIRCUITS (Find Out How a Transistor Radio Works ...)

88. "Crystal Set" Radio 52
89. "Funny" Transistor Radio 52
90. One Transistor Radio 53
91. Spark Gap Transmitter 53
92. Morse Code Transmitter 54
93. Remote Water Level Detector 54
94. AM Broadcaster 55

VI. SONIC ZOO AND SOUND FACTORY (Producing Silly Sounds Using Electronics)

95. Basic Audio Oscillator 55
96. Light-Controlled Bird 56
97. Electronic Motorcycle 56
98. Chirping Bird 57
99. Electronic Siren 57
100. Fish Caller 58
101. Plant Growth Stimulator 58
102. Electronic Organ 59
103. Electronic Raindrops 59
104. Electronic Cat 60
105. Electronic Bird 60
106. Digital Rhythm 61
107. Sound Machine I 61
108. Sound Machine II 62
109. Sound Machine III 62

VII. ELECTRONIC DECISION-MAKERS (Hate to Make Decisions? These Projects Are For You!)

110. Electronic Coin Toss 63
111. Electronic Coin Toss II 63
112. Even or Odd 64
113. Electronic Roulette 64
114. Electronic Dice 65
115. Roulette With Sound 65
116. The Light Fantastic 66
117. ESP Tester 66
118. Close-In 67

VIII. A TRIP TO DIGITAL LAND (A Look at the Circuits That Let a Computer Work)

119. Three-Input OR Circuit 67
120. Three-Input AND Circuit 68
121. RTL Inverter 68

122. RTL Buffer 69
123. RTL OR Gate 69
124. RTL AND Gate 70
125. DTL OR Gate 70
126. DTL AND Gate 71
127. DTL NOR Gate 71
128. DTL NAND Gate 72
129. DTL Exclusive OR Gate 72
130. TTL Inverter 73
131. TTL Buffer 73
132. TTL OR Gate 74
133. TTL AND Gate 74
134. TTL 3-Input AND Gate 75
135. TTL NOR Gate 75

IX. MORE ADVENTURES IN DIGITAL LAND (Our Adventures Continue ...)

136. TTL XOR Gate 76
137. TTL NAND Enable Circuit 76
138. TTL AND Enable Circuit 77
139. TTL OR Enable Circuit 77
140. TTL Line Selector 78
141. TTL Data Selector 78
142. TTL R-S Flip-flop 79
143. TTL R-S Flip-flop II 79
144. Transistorized Toggle Flip-flop 80
145. NAND Toggle Flip-flop 80
146. J-K Toggle Flip-flop 81
147. TTL Astable Multivibrator 81
148. TTL J-K Flip-flop 82
149. TTL D Flip-flop 82
150. TTL Latch Circuit 83
151. Shift Register 83

X. CIRCUITS THAT COUNT (These Are Also Used in Computers ...)

152. Basic Counter Circuit 84
153. Synchronous Counter 84
154. Asynchronous Counter 85
155. Counter With Line Decoder 85
156. Divide by 4 Counter 86
157. Divide by 4 Counter with Line Decoder 86
158. How a Line Decoder Works 87
159. Multiple Counter 87
160. Binary Counter with Display 88
161. Divide by 3 Counter with Display 88
162. Divide by 4 Counter with Display 89

XI. SOME SILLY CIRCUITS (These Projects Are Strictly for Fun!)

163. Light or Sound 89
164. Be Your Own Multivibrator 90
165. Anticipation 90
166. Big Mouth! 91
167. Sound Stop 91
168. Multivibrator Switching 92
169. Winking LEDs 92
170. A Phony Counter? 93
171. Alphabet Flasher 93
172. A One-Shot TTL 94
173. Winking LEDs II 94
174. Transistor Timer 95
175. TTL Tone Generator 95
176. Meet the VCO 96
177. Sound Out Timer 96
178. Buzzin' LED 97
179. Son of Buzzin' LED 97
180. Octave Generator 98
181. Crossing Signal 98
182. Digital Timer 99
183. Set/Reset Buzzer I 99
184. Set/Reset Buzzer II 100
185. Set/Reset Buzzer III 100
186. Optical Counter 101
187. LED Sound Meter 101
188. Shot in the Dark III 102
189. Set/Reset Match 102
190. Number Displays 103

XII. TESTING AND MEASURING CIRCUITS (Here's How We Make Sure Everything is OK in a Circuit)

191. Circuit Continuity Checker 103
192. Acoustic Ohmmeter 104
193. DC Voltmeter 104
194. Voltage Level Detector 105
195. AC Voltmeter 105
196. Audio Signal Generator 106
197. Volume Level Meter 106
198. Capacitance Checker 107
199. Diode Tester 107
200. Transistor Checker 108

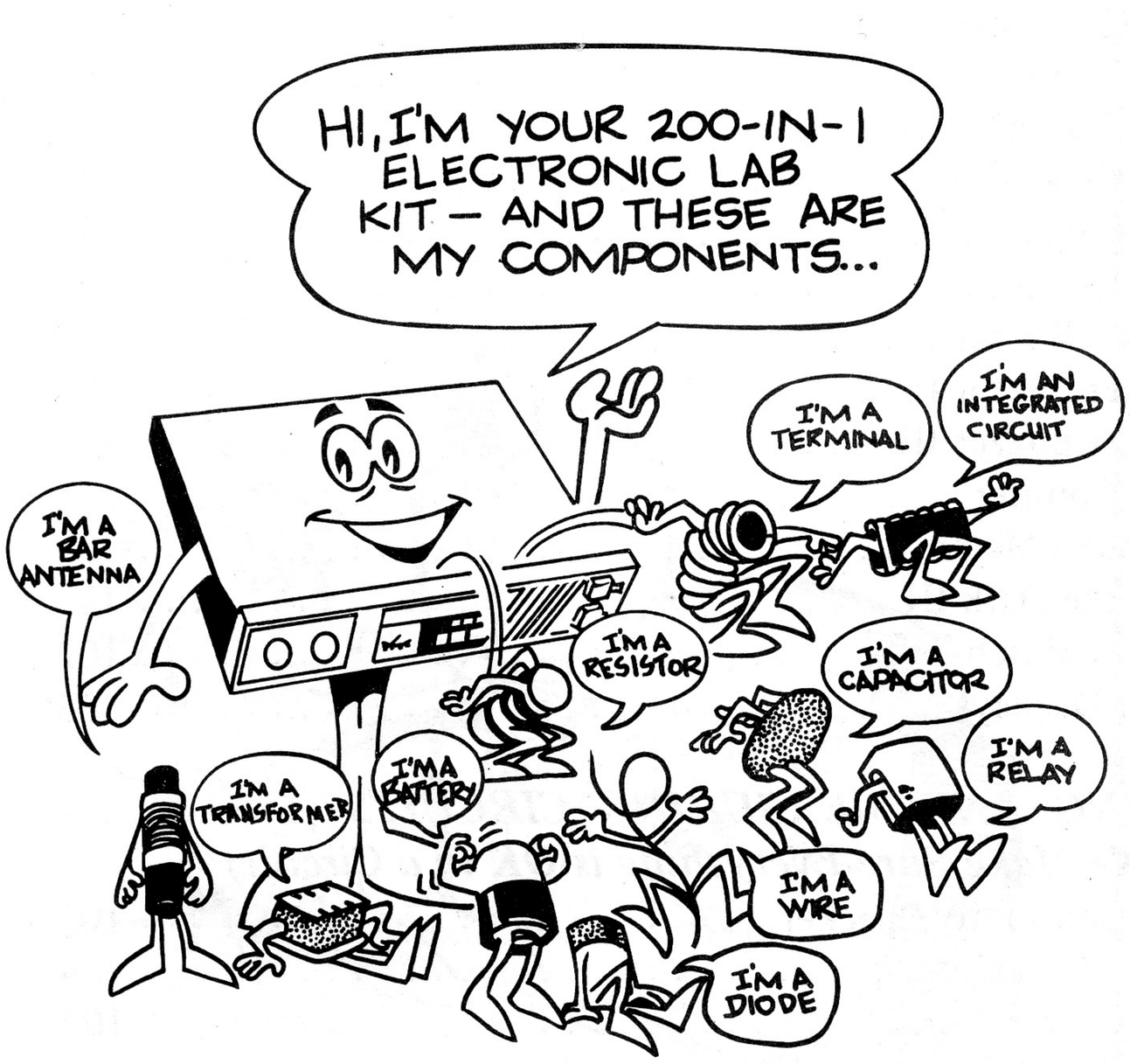

Your Kit includes many different parts you're going to use to build the 200 Projects. If this is your first experience with electronics, you probably don't know the difference between a resistor and a transistor. If so, don't worry – let's take a quick look at the different parts so you can identify them! (We've included a drawing of the part itself and its ***schematic symbol.*** Schematic symbols are used to make up circuit diagrams ... we'll talk more about this later.)



Resistors – These are brown tube-shaped parts with color bands around them. Resistors oppose the flow of electricity. There are 20 resistors in your Kit.

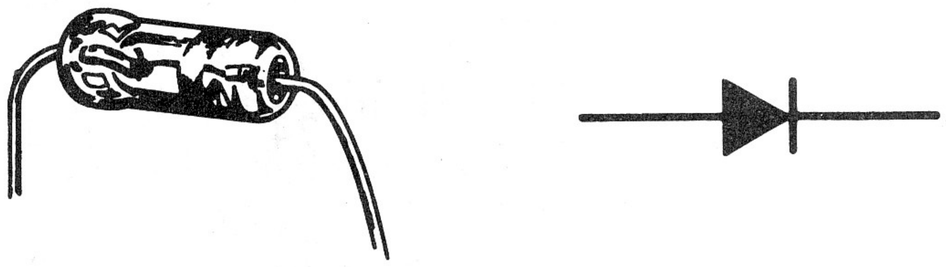

Diodes – Diodes allow electricity to flow through them in just one direction. You'll see that diodes can be used in a variety of circuits. There are three diodes in your Kit – one is made from germanium (the Ge diode) and two out of silicon (the Si diodes).

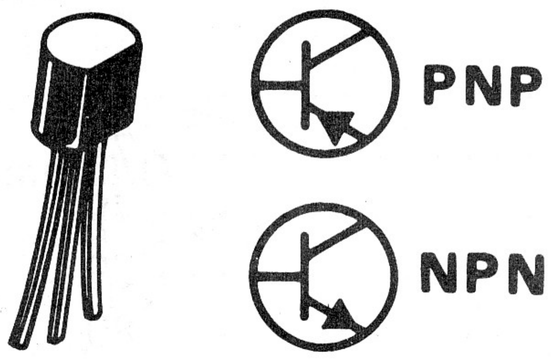

Transistors – Your Kit has four Transistors. There are two different types of transistors included: NPN and PNP. Transistors are used to switch, amplify and oscillate **(we'll find out what those words mean later...).**

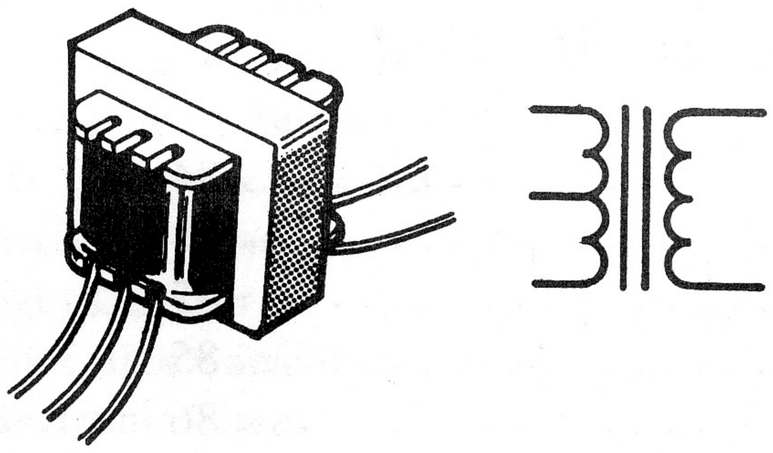

Transformers – Your Kit has two Transformers. Transformers "match" different parts of a circuit to each other so the entire circuit can operate correctly. We'll see how a transformer works later in this Manual...

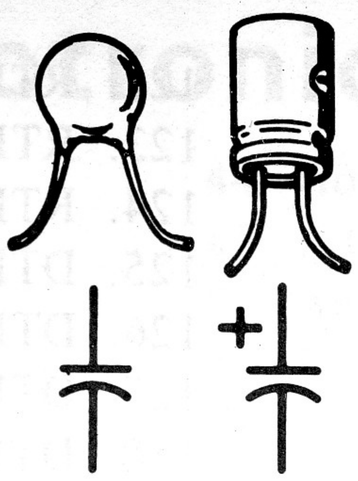

Capacitors – Just about every Project in your Kit uses at least one capacitor. There are 10 capacitors in your Kit. Four of them are tubular and blue (or gray); these are called **electrolytic capacitors.** You'll notice these four electrolytics have a + beside one terminal. When building a Project, you'll have to make sure you connect the + terminal of an electrolytic correctly. Other capacitors (and resistors) can be connected either way.

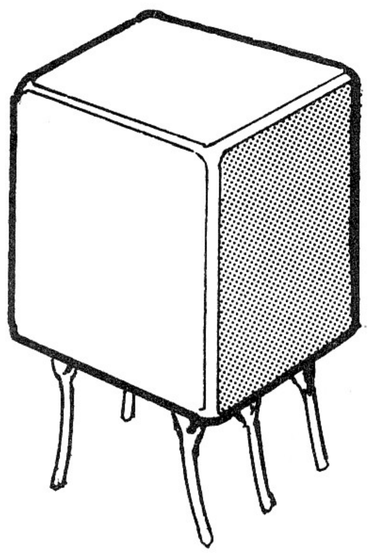

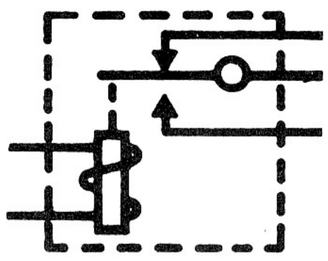

Relay – The Relay in your Kit is actually a switch using an electromagnet. We'll see how it works later.

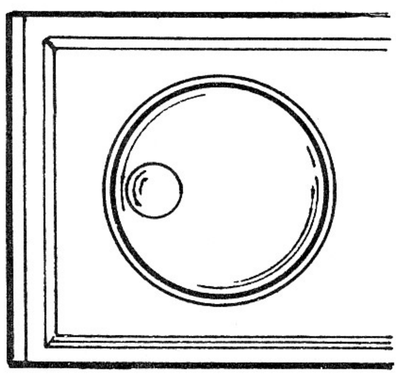



Tuning Control – The Tuning Control in your Kit is actually a capacitor whose value can be changed by turning the attached knob. This type of capacitor is known as a **variable capacitor.** It's used mainly in radio circuits.

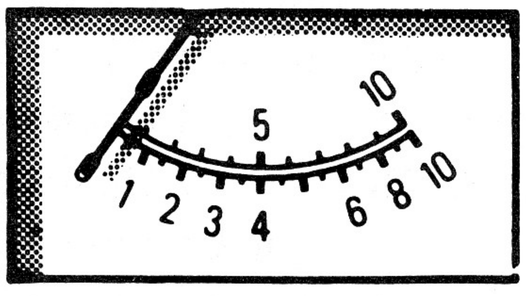

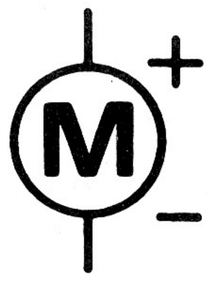

Meter – The Meter is a very important indicating and measuring device. You'll use it to measure the amount of current flowing in a circuit – the higher the reading, the more current is flowing. You'll notice the Meter has + and – markings beside its terminals. Be sure to make connections to the proper terminal (+ or –) when building a Project using the Meter.

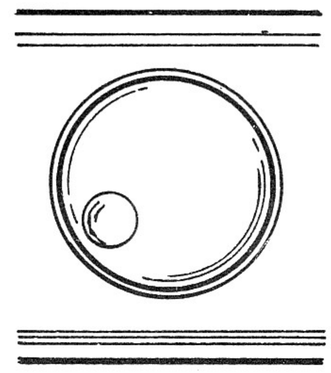

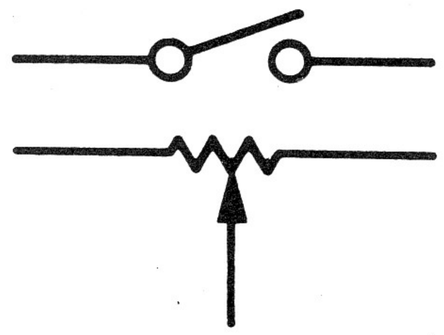

Control and Power Switch – This is actually two parts in one! The Control is a variable resistor. You can change how much it opposes the flow of electricity by adjusting the Control Knob. There's also a switch built into the Control. Turn the Control Knob fully to the left (counterclockwise) to OFF and you can shut off power to a circuit. Turn the Control Knob to the right (clockwise); you'll hear a "click" when power in a circuit is ON. (We'll refer to this as the ON position.)

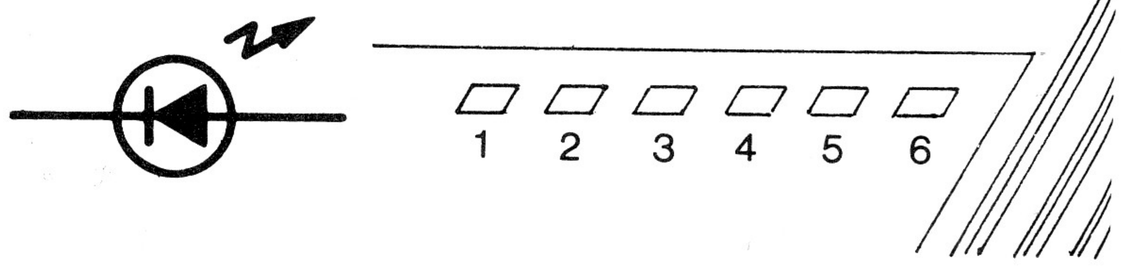

LEDs – "LED" stands for "light emitting diode." These work just like other diodes, except that LEDs give off light when electricity flows through them. There are six LEDs in your Kit.

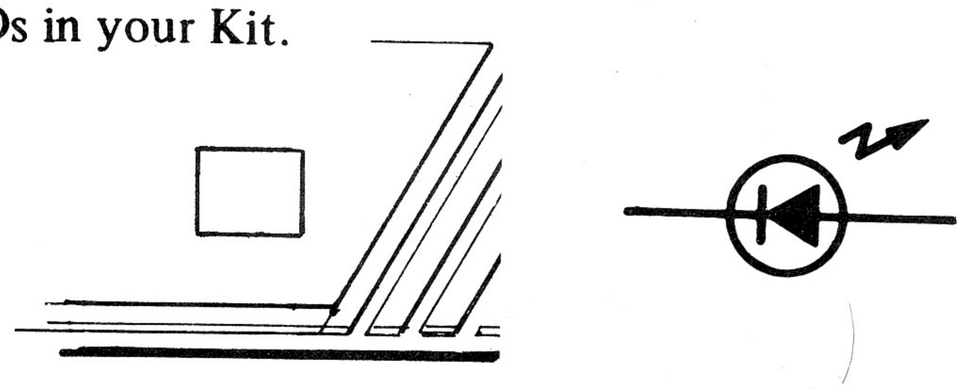

We've included two different shapes of above LEDs. 6LEDs are displayed in line on front panel of your kit. Also you'll see one more LED for indication use just under the 6LEDs.

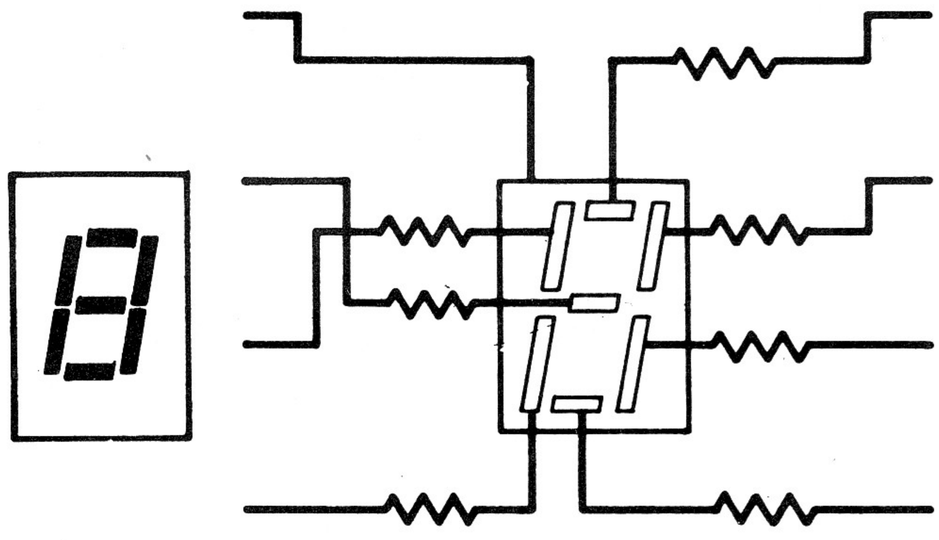

LED Digital Display – This is an arrangement of seven tiny LEDs (called **segments**). The seven segments form an outline that you can use to display most letters and numbers.

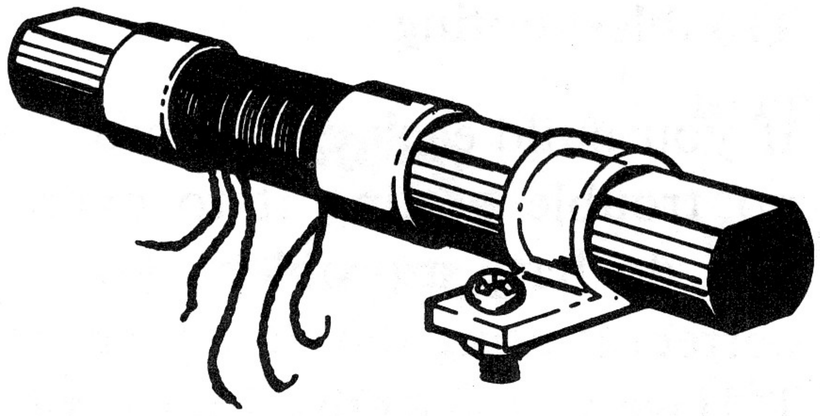



Antenna Coil – You'll use this part in radio circuits. It's a coil of wire wrapped around a dark colored rod made of ferrite (a special form of powdered iron).

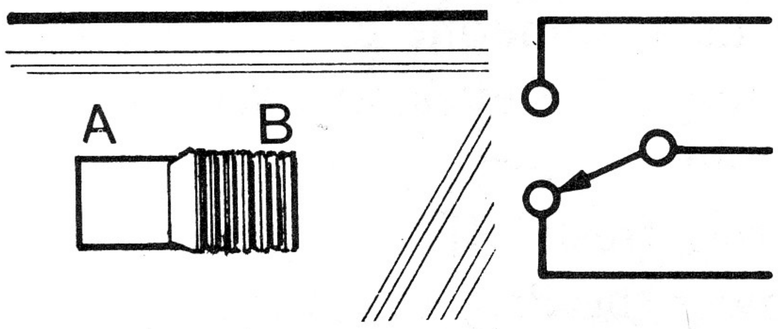

Switch – The Select Switch on the front of your Kit is used to select between two different electrical connections (labeled A and B).

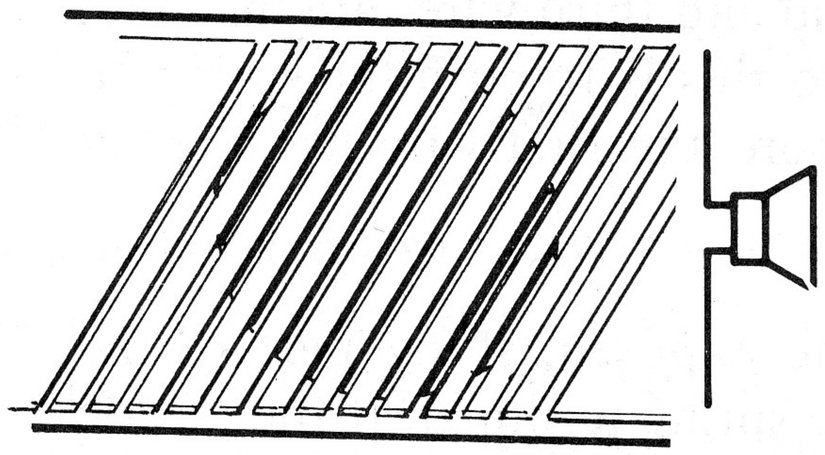

Speaker – You're already familiar with what a speaker is. It converts electrical energy to sound you can hear.

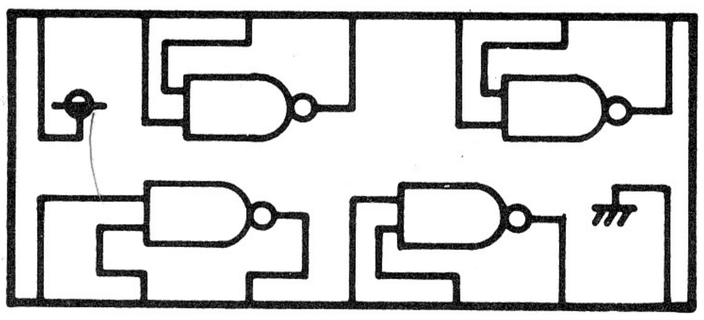

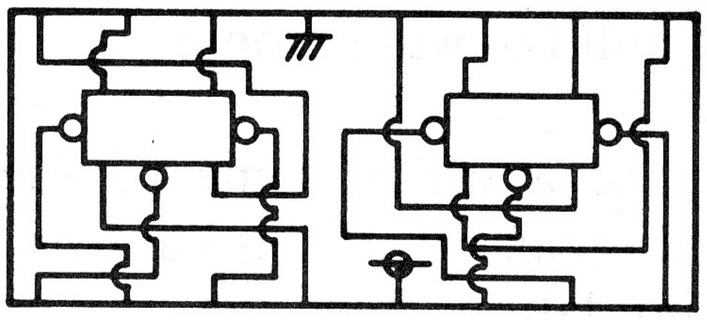

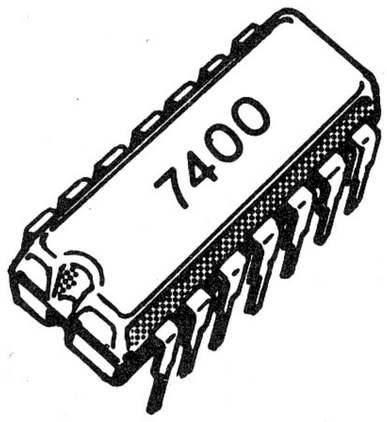

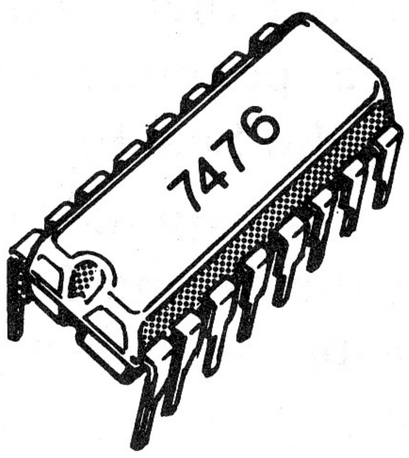

Integrated Circuits – There are two different Integrated Circuits in your Kit. Integrated Circuits are probably the most important components in electronics today. We'll talk much more about these later...

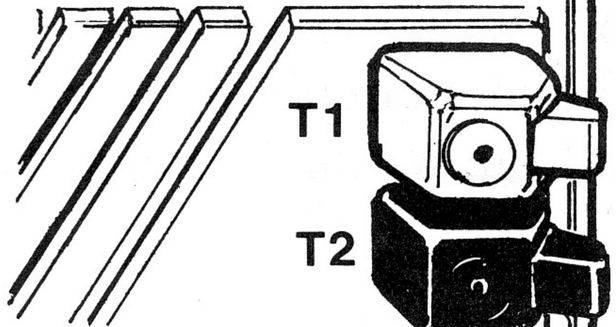

Terminals – The two Terminals (labeled T1 and T2) will be used in some Projects to make connections to external contacts or circuits.

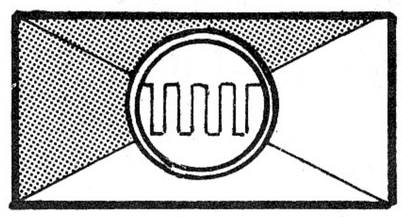

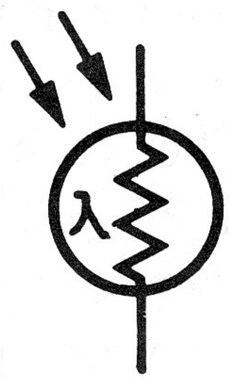

CdS Cell – This part is located on the front panel just above the Lamp. We'll talk more about this later ... for now, we'll just say it has something to do with light!

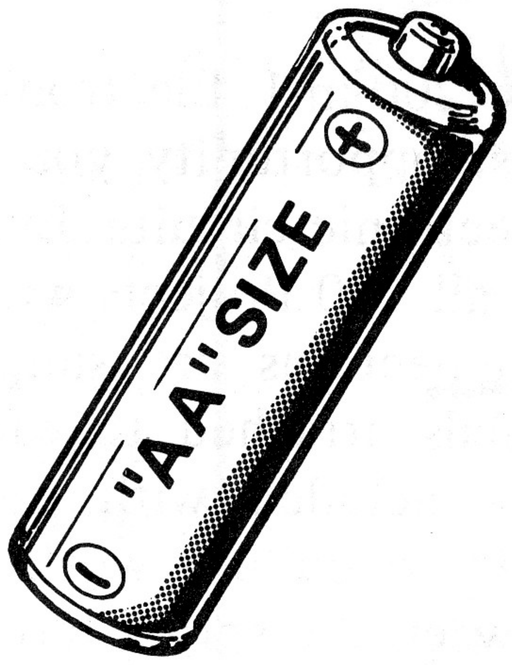

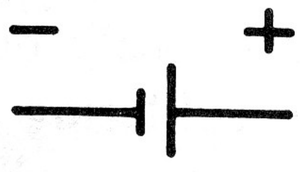

Batteries – Your Kit requires six type AA batteries (such as Radio Shack Cat. No. 23-552). Insert them in the Battery Compartment underneath your Kit.

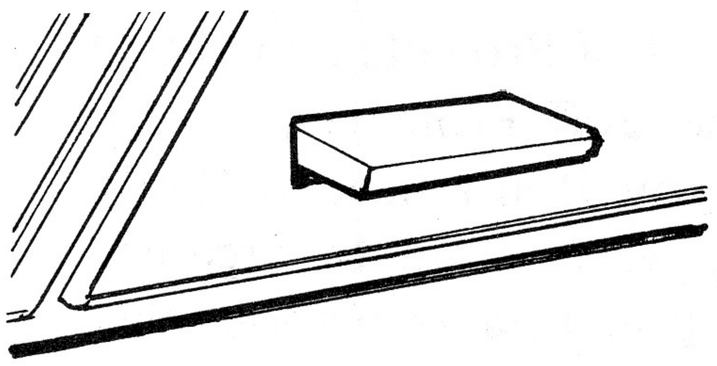



Key – The Key on the front panel of your Kit is actu ally another switch. It's the same thing as an ordinary push-button switch.

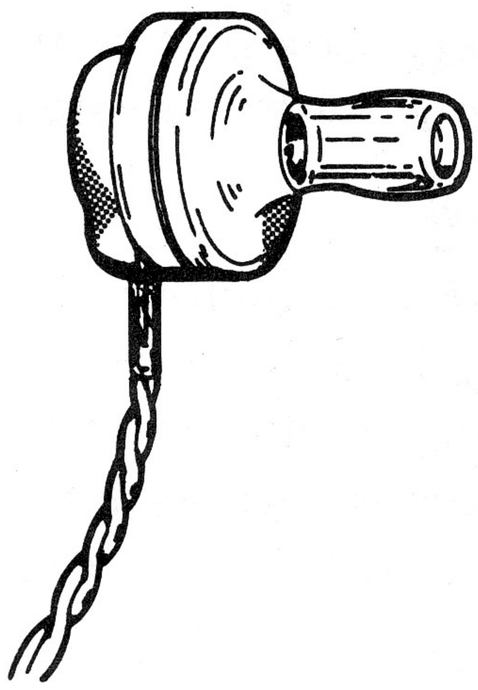

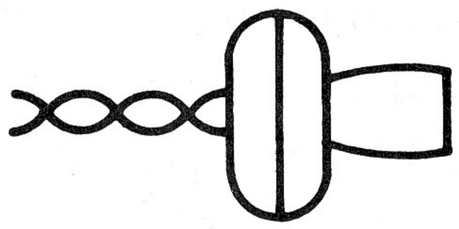

Earphone – You're also already familiar with this part. You can listen to sounds through this instead of the Speaker. (The Earphone uses less electricity than the Speaker.)

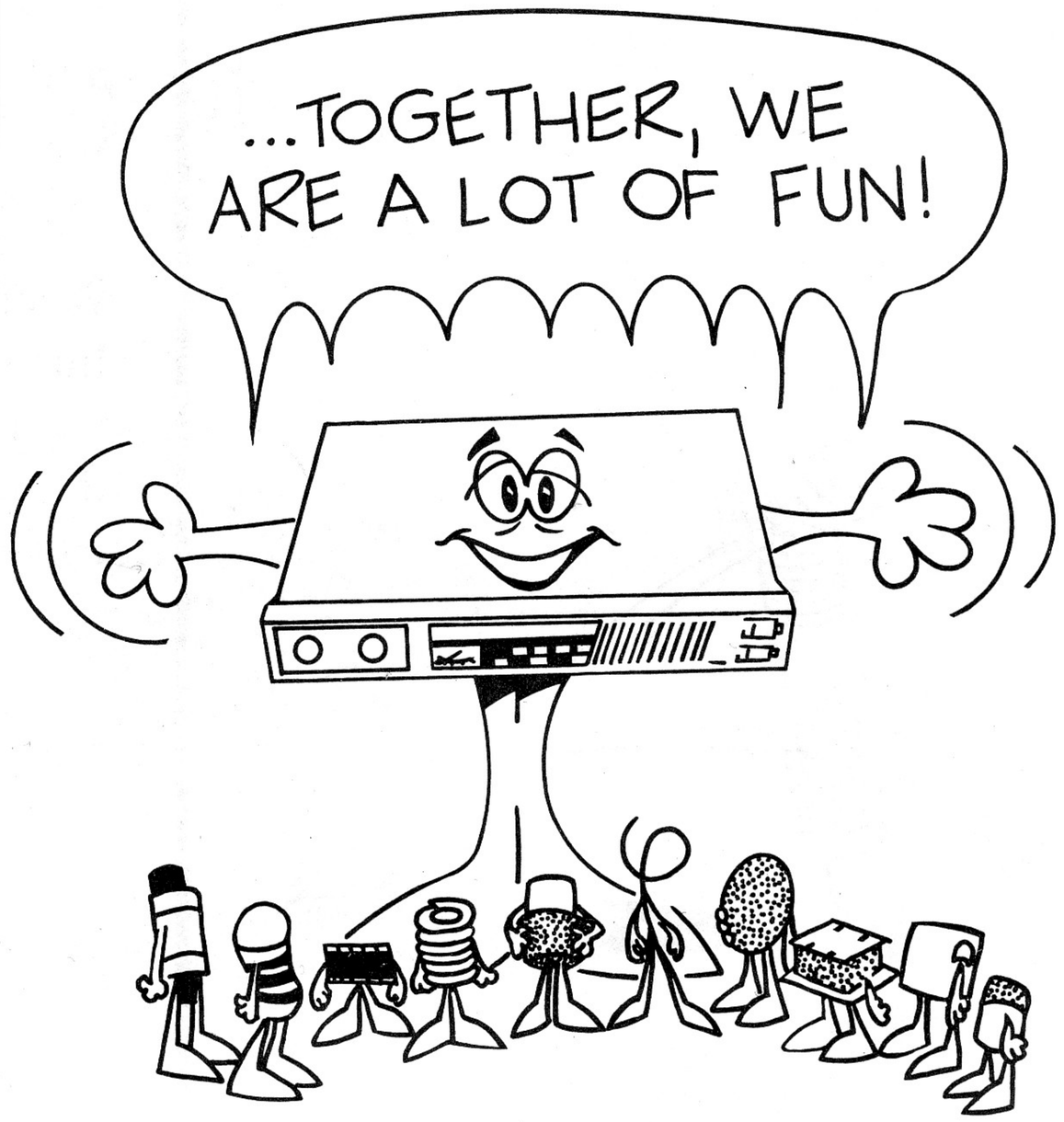



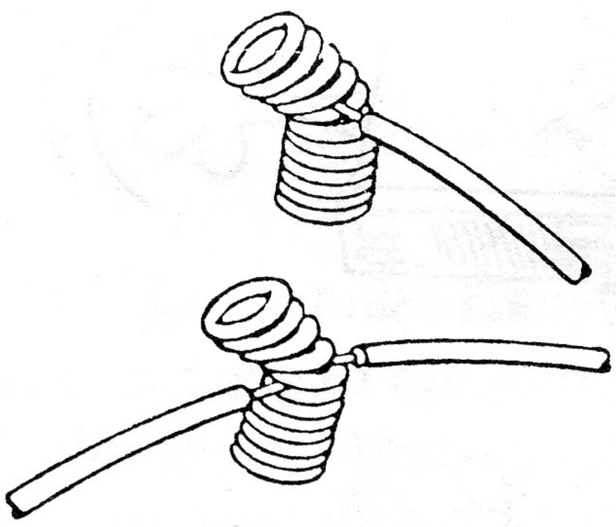

Here's how to make connections using the spring terminals ... be sure only the shiny, exposed ends of the wires touch the spring.

Getting Started

Your new SCIENCE FAIR 200-in-1 Electronics Project Kit may be the first opportunity you've had to play around with electronic circuits. Even if it is, you can easily build all 200 Projects without tools or soldering. Connections are simple thanks to the spring terminals attached to each part. A wiring sequence is included with each Project – all you have to do to build a working Project is connect wires between the spring terminals listed in the wiring sequence. We've included plenty of wire with this Kit for making connections.

As you can see from the list of Projects on pages 2 and 3 we've arranged the 200 Projects into different categories. While you don't have to build all 200 Projects in order, we've tried to organize them so that the things you find out about electronics in early Projects will help you understand what's going on in later Projects.

Your Kit requires six type AA batteries (we recommend using Radio Shack Catalog Number 23-552 for longest life). Install them in the Battery Compartment on the bottom of your Kit. Be sure to install the Batteries correctly according to the + and – markings inside the Battery Compartment. (The + end of a battery is the one with the small metal cap.)

Whenever you're not using your Kit, remove the Batteries. Never leave weak or dead batteries in your Kit – they can leak damaging chemicals (even if they're "leakproof" types). This is a good habit to get into for all battery-operated items.

Building Projects

The spring terminals and pre-cut wire make it a snap to build the Projects. To connect a wire to a spring terminal, just bend the spring over to one side and insert the wire into the opening. Sometimes two or three wires are connected to a single spring so make sure the first wire doesn't come loose when the second and third wires are inserted. The easiest way to do this is to push the spring on the side opposite where the first wire has already been inserted.

Be sure that only the exposed, shiny part of the wire is inserted in the spring terminal. If the plastic insulation part is inserted into the terminal, electrical contact won't be made and the circuit will not work. To remove wires from spring terminals, just bend each terminal and pull the wires from it.

After using your Kit for a while, some of the exposed wire ends might break off. If this happens, just remove 3/8" of insulation from the broken end and twist the strands together. You can remove the insulation with a penknife or wire stripper tool (available from Radio Shack).

Here's an example of using the Wiring Sequence provided for each Project. Suppose a Project has the following wiring sequence:

123-7, 6-2, 4-33-121, 122-3, 5-87

Here's what you do:

- Connect a wire between terminals 123 and 7
- Connect another wire between terminals 6 and 2
- Connect a wire between terminals 4 and 33, and another between 33 and 121
- Connect a wire between 122 and 3

Continue in this manner until you've finished all connections.

Note: In the wiring sequences in this Manual, we've deliberately left an important wiring connection for last. This connection supplies power to the Project. Be sure to make this connection last to prevent possible damage to delicate components.

Troubleshooting

If you build each circuit properly, you should have no trouble getting it to operate properly. But if you do have a problem, you can usually find and correct it using the following steps:

1. Have you assembled the Project properly? Check the wiring terminals to make sure you've made all wiring connections correctly. Sometimes it's a good idea to have someone else take a look at it too – a second pair of eyes may see something you've overlooked.
2. Are the Batteries fresh? If not, they could be too weak to power the Project.
3. If the circuit uses the CdS Cell, it might be getting too much or not enough light.
4. If the Lamp doesn't work, make sure it's screwed all the way into its socket.

A Suggestion .....

As you wire up a project (especially the ones with lots of connections) you might find it helpful to mark through each terminal number as you connect to it. If you use different colored pencils you will be able to build a circuit many times (and still be able to read all the Wiring Sequence).

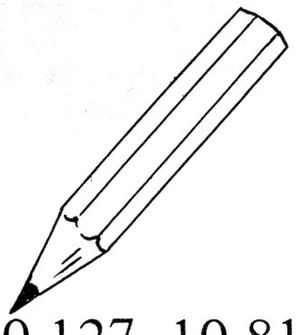

~~6-9-73~~-80-127, 10-81-98-104-102-

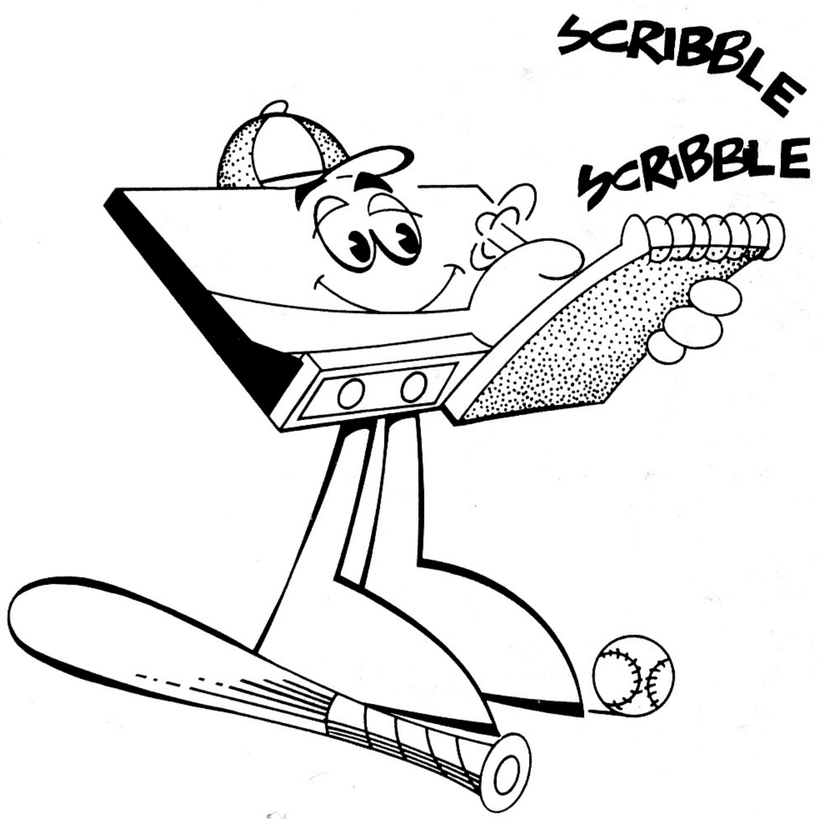

Keeping a Notebook

You're going to find out a lot about electronics as you play around with this Kit. Much of what you discover about electronics in early Projects will be useful in later Projects. And you'll find out many little things while building the Projects that will come in handy when you start modifying and designing your own circuits. You'll need some way to collect and organize all this information. That's why we strongly suggest keeping a notebook.

Your notebook doesn't have to be like the ones you keep at school. Think of it as your diary – you'll have fun looking back on it after you finish all 200 Projects. We'll ask you several times in this Manual to make notes in your notebook. There's a reason for this – as you'll discover later in this Manual!

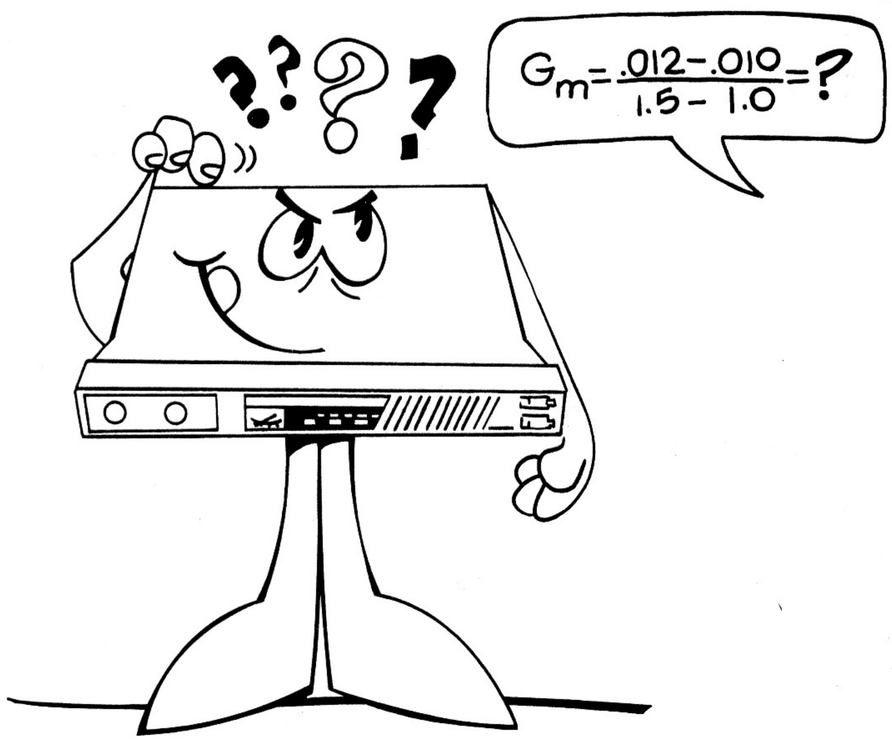

A Few Final Thoughts ...

Don't be afraid to experiment with the circuits in this Manual. Change parts – make new connections – substitute the Meter for the Speaker, etc. While we've prepared 200 Projects for you, you can actually create many more circuits with a little imagination and experimentation. Be sure to record your "creations" in your notebook.

We hope your 200-in-1 Electronics Project Kit is the start of something that will excite and stimulate you. Electronics plays an important role in today's world–and its importance is increasing. We hope electronics becomes a lifetime hobby – or even your career.

But enough talk – let's start our exploration together!



And remember — if all else fails, read your Manual!

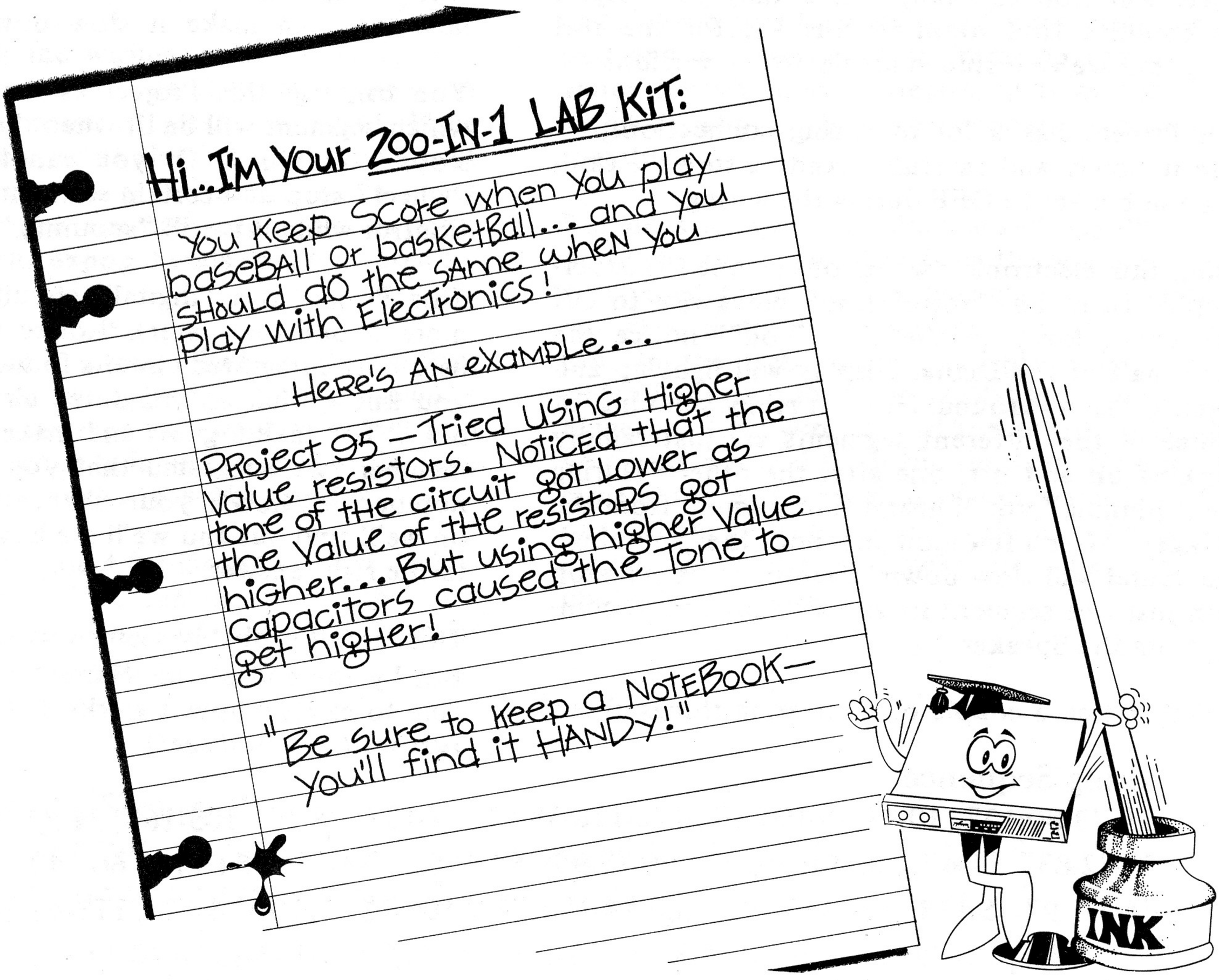

1. WHEEL OF FORTUNE

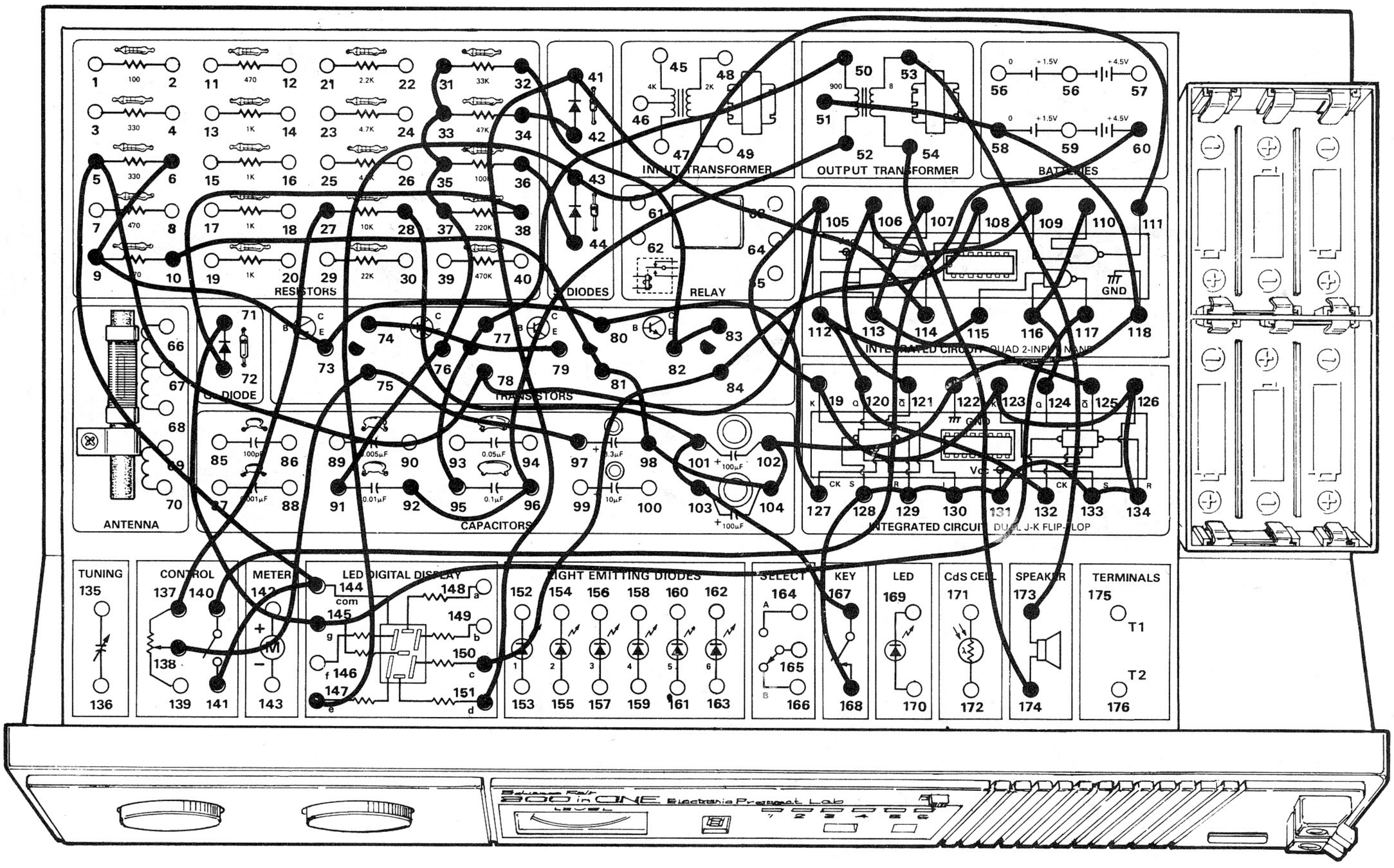

You've probably seen a roulette wheel or "wheel of fortune" type game in operation. You know how it works ... players try to guess where the wheel will stop and they win if they guess right. We couldn't find room in this Kit for the real thing, but we've included an electronic version!

This Project has a lot of wiring connections, so wire it slowly and carefully. And be sure the Control Knob is set to OFF during the wiring.

Using this electronic "wheel of fortune" is super-simple. Turn the Control Knob clockwise to ON and press down on the Key. You'll notice the lower half of the Digital Display will light up and seem to "spin" around. (It's not really spinning, of course – the different segments are just rapidly blinking on and off, one after the other.) During the "spinning" you'll hear a funny sound from the Speaker. After a few moments both the "spinning" and sound will slow down. Eventually, it will stop with just one segment lit and a steady sound coming from the Speaker.

You'll notice a couple of interesting things about this circuit. Each segment of the Display has its own sound. And the speed at which the Display "spins" depends upon the Control. Try moving the Control Knob while the "wheel" is "spinning"... notice how you can make it slow down or speed up?

You can use this Project as a game by guessing which segment will be lit when the "wheel" finally stops "spinning." Or you can try to make the "wheel" stop at a certain segment by adjusting the Control while it is still "spinning."

This Project is a "digital" circuit (we'll find out more about that later). Notice how this Project uses both **integrated circuits** found in your Kit. Do you know what an integrated circuit is? Probably not... but take a guess and make a note of it (remember, we suggested that you keep a personal notebook... now's your chance to use it). Later on we'll find out and we'll see how close you come to the right answer.

This circuit probably seems very complicated now. But by the end of this Manual you'll probably be able to explain how it works. (*Think we're joking? Just wait – you'll see!*)

Wiring Sequence

6-9-73-80-127, 10-81-98-104-102-122-118-58-51, 27-137, 28-101-103-167, 31-33-35-37-76-91, 32-82-83, 34-42, 36-44, 38-72, 50-77-95, 52-96-92, 53-173, 54-174, 60-140, 71-145-117, 74-79, 97-75-138, 107-113-125, 108-84-150, 109-106-121, 110-116-124, 111-43-147, 114-41-151, 115-112-120-132, 141-144-5-78-105-119-123-126-134-133-131-130-129-128-168.

2. THE NOISY LIGHT

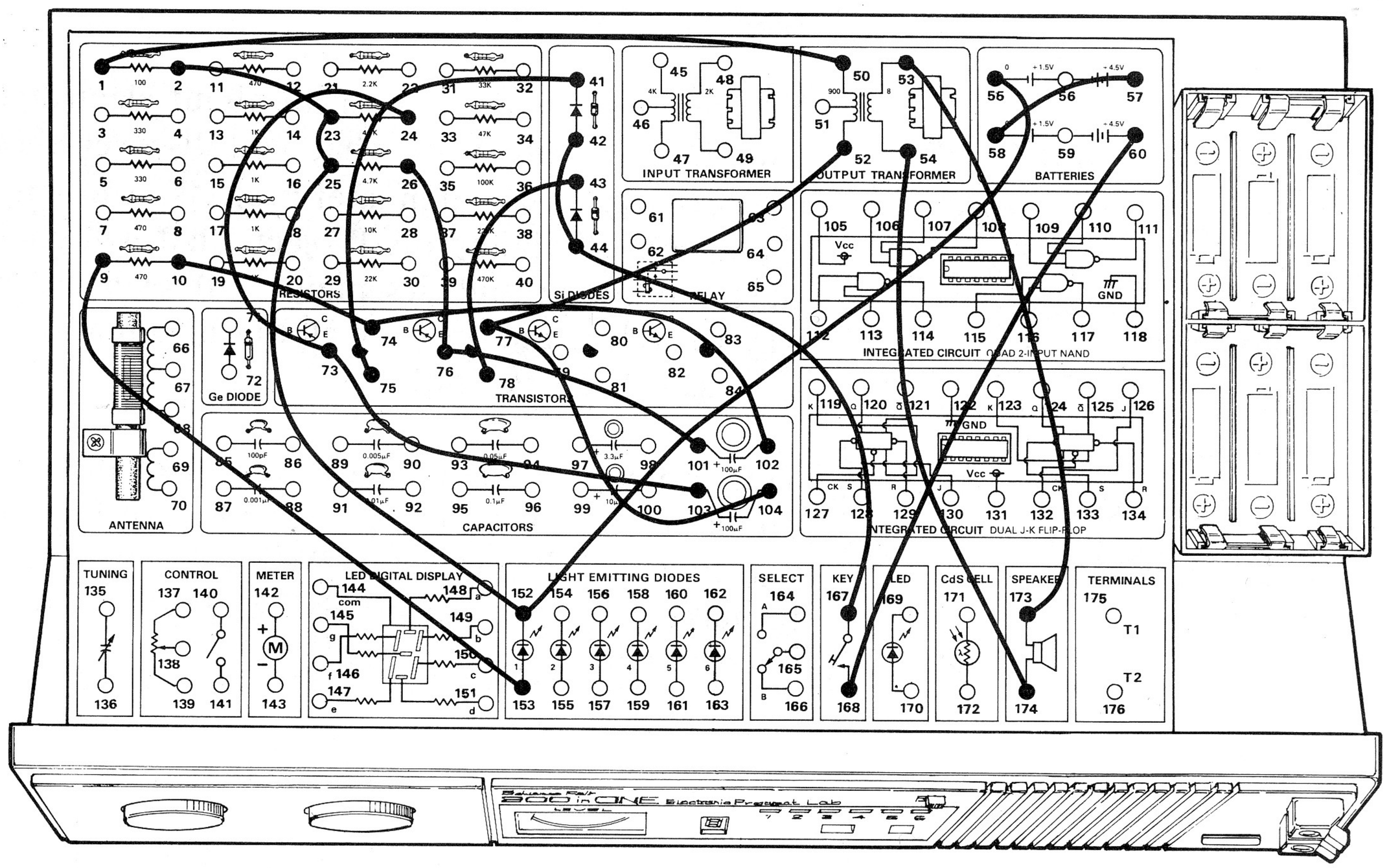

Some things go out with a bang... others with a whimper... but this Project just goes *pop!*

When you finish wiring this Project, press and hold down the Key. LED 1 on the front panel will light up. Keep holding down the Key, and LED 1 will go out. You'll hear a "popping" sound from the Speaker when this happens.

But keep holding the Key down and something interesting happens... the LED will light back up! It will briefly stay on and will go out again, making another "pop" as it goes out. This will continue over and over as long as you hold the Key down.

The Project uses a **multivibrator** circuit. Multivibrator circuits let us switch things (like the LED in this Project) on and off electronically. They're also used in many of the digital electronics circuits in your Kit.

We'll talk more about multivibrator circuits later. For now, can you guess how this type of circuit got its name? (*Here's a hint – how many different things does this circuit do??*)

Make a note of your guess... later we'll see how close you come to the truth.

NOTES

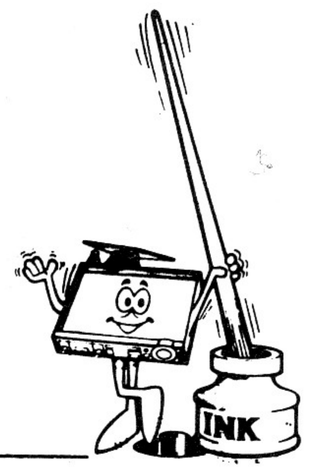

Wiring Sequence

1-50, 2-23-25-152-55, 9-153, 10-74-102, 24-73-103, 26-76-101, 41-75, 42-44-167, 43-78, 52-77-104, 53-173, 54-174, 57-58, 60-168.

3. ELECTRONIC CANDLE

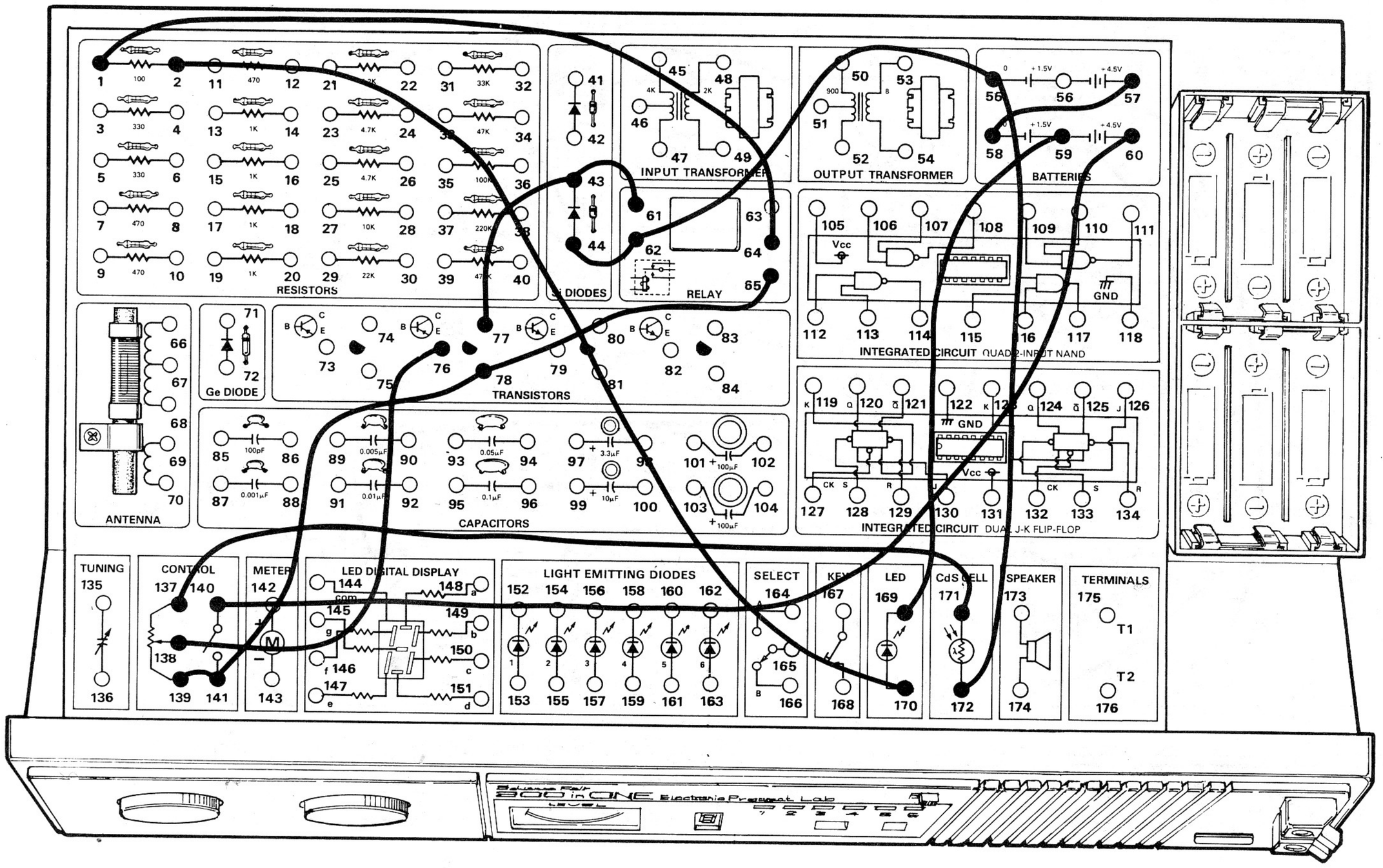

Blowing out a candle is easy – but have you ever tried blowing out an electric light? You can with this Project! This little bit of electronic trickery will keep your friends guessing how you do it.

This trick works best in a dark room. Turn the Control Knob clockwise to switch power ON and carefully adjust the Control to the point where the LED is about to turn on. Tell your friends you must "light" the electronic candle with – *what else?* – a flashlight. Shine the flashlight on the CdS Cell (on the front panel of your kit); the LED will turn on.

Now you're ready to "blow" your electronic candle out. Cup your hand around the LED and blow on it. Slightly move your hand so that you cover up the CdS Cell. *Presto!* The LED will go out! To "re-light" it, simply shine the flashlight on it again.

As you probably suspect, the CdS Cell is sensitive to light. We can (*and will*) use the CdS Cell in other projects to control circuits using light.

Like all good magicians, you'll have to rehearse this trick a few times before performing it for others. It's important that you only try this trick in a dark room. And you'll find that adjusting the Control to exactly the right point to make this trick work will take some practice.

Have fun with this Project - and please don't give away the secret of how you do it!

NOTES

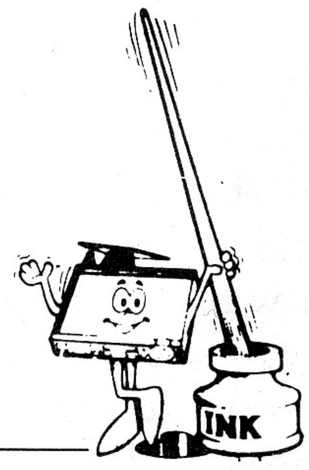

Wiring Sequence

1-64, 2-170, 44-62-55-172, 57-58, 59-169, 60-140, 61-43-77, 65-78-141-139, 76-138, 137-171.

4. RAIN DETECTOR

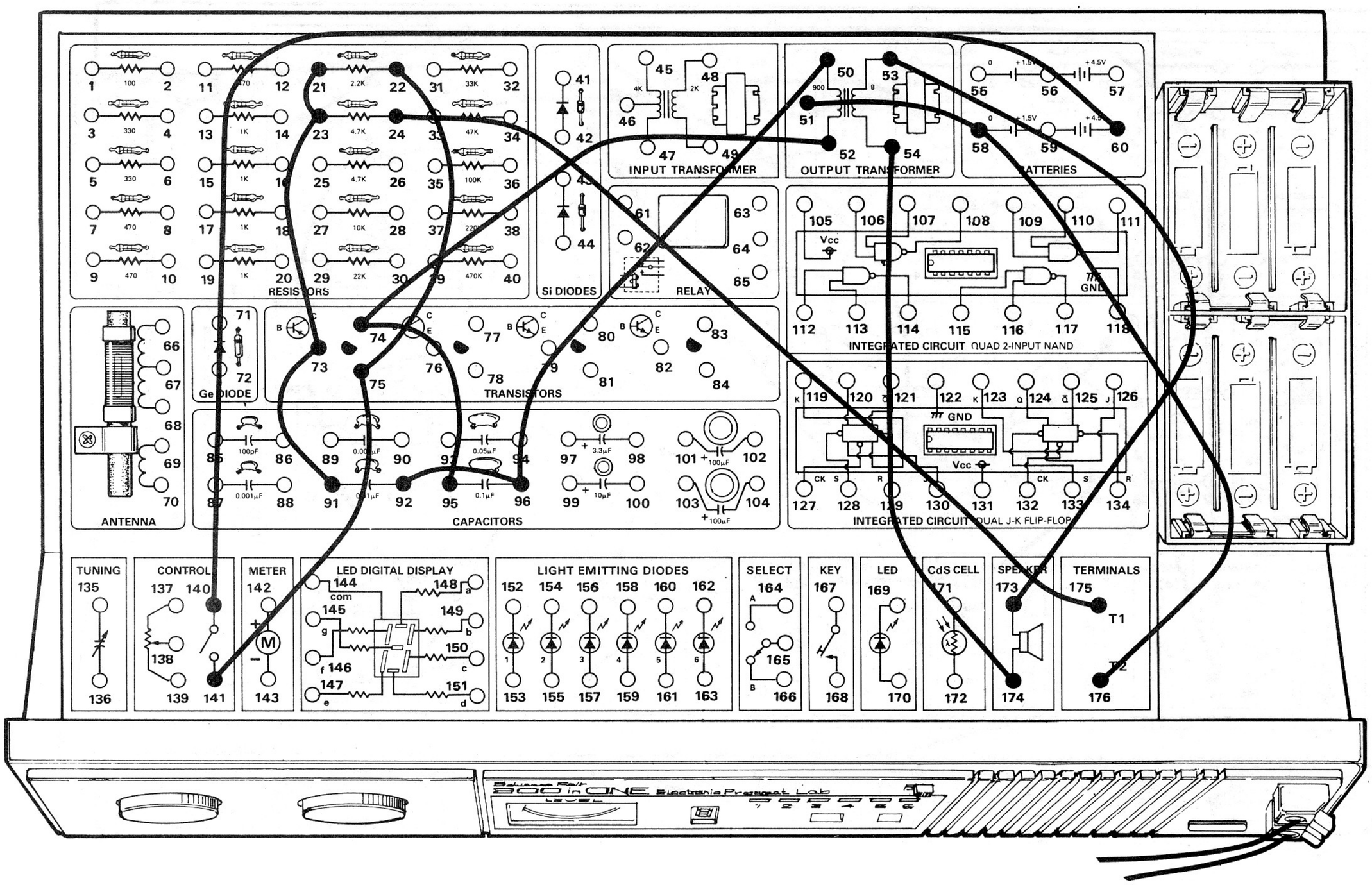

One way to tell if it's raining is to stand outside without an umbrella... *if you get wet, it's raining!* Fortunately, there is a better way – our rain detector circuit.

After you finish the wiring for this Project, carefully place the exposed ends of the two long wires side-by-side on a piece of plastic or wood. Place the two exposed ends as close as you can without having them touch. Use tape to hold the two long wires in place (make sure their exposed ends don't touch and that the exposed ends aren't covered by the tape).

Using this Project is a snap. Just set the Control Knob clockwise to switch power ON and place the two long wires wherever you want to detect rain or water. When water falls on the ends of the long wires, you'll hear a sound from the Speaker.

You can use this Project for more than just detecting rain, of course. You can use it to check if a faucet is dripping, or if the water in the bathtub or aquarium is getting too high.

This Project works because water can *conduct* electricity, just like a wire. When we say something can "conduct" electricity, we mean electricity can flow through it. When water falls on the exposed ends of the two long wires, it "completes" the circuit and you hear a sound from the Speaker. But water doesn't conduct electricity as well as a wire, which is why we have the exposed ends so close together.

But does all water conduct alike? Try this – remove the two long wires from the wood or plastic you taped them to. Get two glasses of water. In one glass dissolve as many spoons of salt as you can. In the fresh water glass place the exposed ends of the two long wires as far apart as you can. Move one long wire toward the other. Note when you hear a sound from the Speaker. Now try the same thing with the glass of salt water. In which one did the detector sound with the wires farthest apart? That's the glass with the water that conducts electricity best!

Wiring Sequence

21-23-73-91, 22-75-141, 24-175, 50-96-92, 51-58-176, 52-74-95, 53-173, 54-174, 60-140, T1-LONG WIRE, T2-LONG WIRE.

5. EARSPLITTER

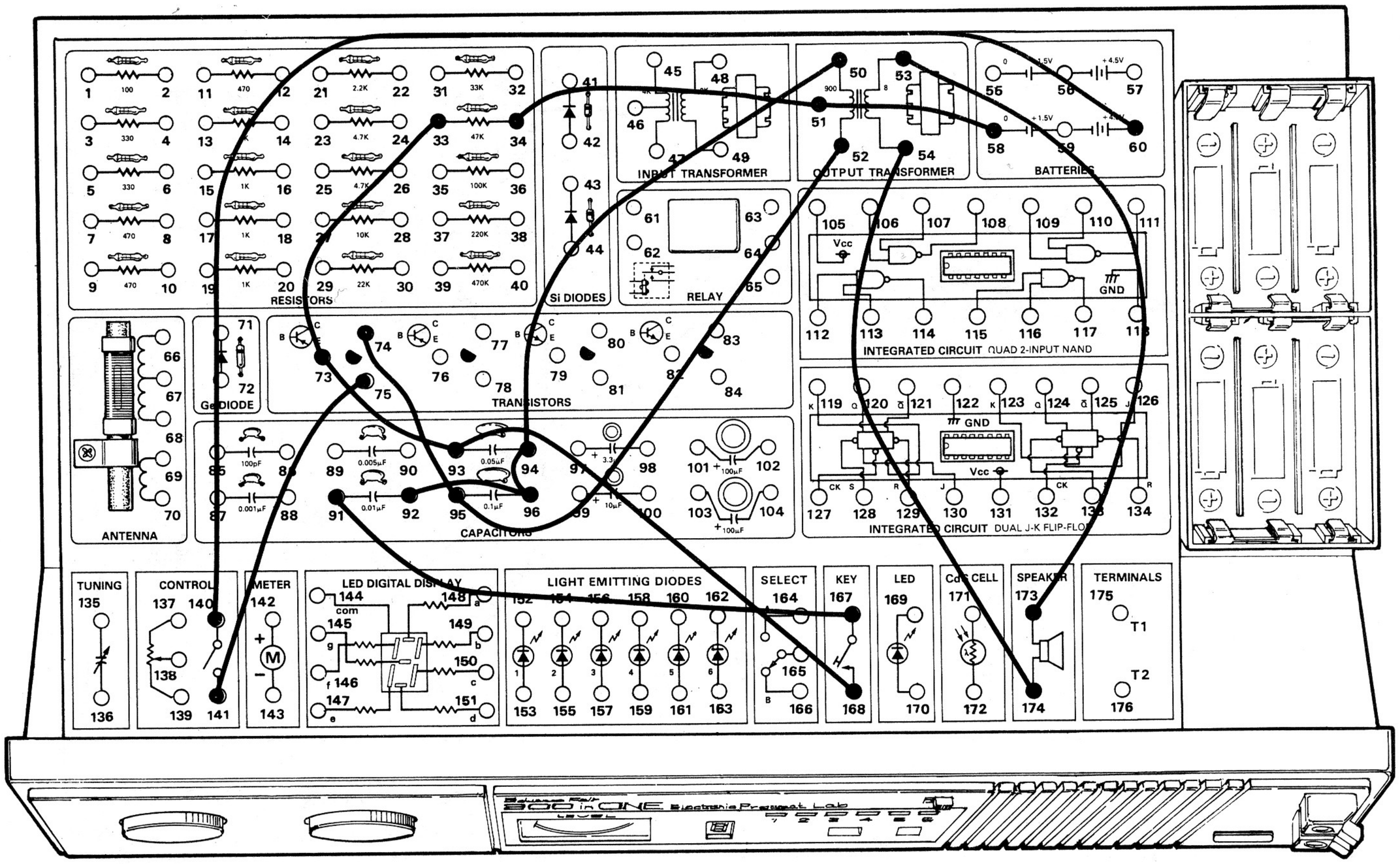

If things are too quiet around your house, this Project will fix that in a hurry! Once you try this Project you'll know that it really lives up to its name.

When you finish wiring this Project, set the Control Knob clockwise to turn power ON. You'll immediately hear a loud, piercing tone (*as will everyone else in the house!*). When you press the Key, you'll notice that the sound from the Speaker will become lower in tone – but still loud as ever. By pressing the Key in the right rhythm you can create sounds like a police siren or ambulance.

The Project uses an **audio oscillator** circuit. You'll find this to be a very common type of circuit in electronics – it's used in many projects in this Manual.

Why does the circuit change tone when the Key is pressed? Sorry – we're not going to tell you yet. But try following the wires from the Key to the other areas of the Parts Board. What do they connect to? (*Okay, here's a hint: the Key adds another part to the circuit. Now try and find which part.*)

Make a note of which part you think it is. Later on we'll see how sharp you were in figuring this circuit out...

NOTES

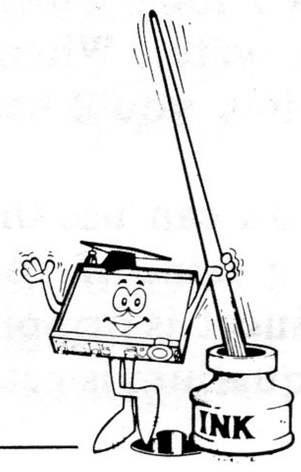

Wiring Sequence

33-73-93-168, 34-51-58, 50-94-96-92, 52-95-74, 53-173, 54-174, 60-140, 75-141, 91-167.

6. PENCIL LEAD ORGAN

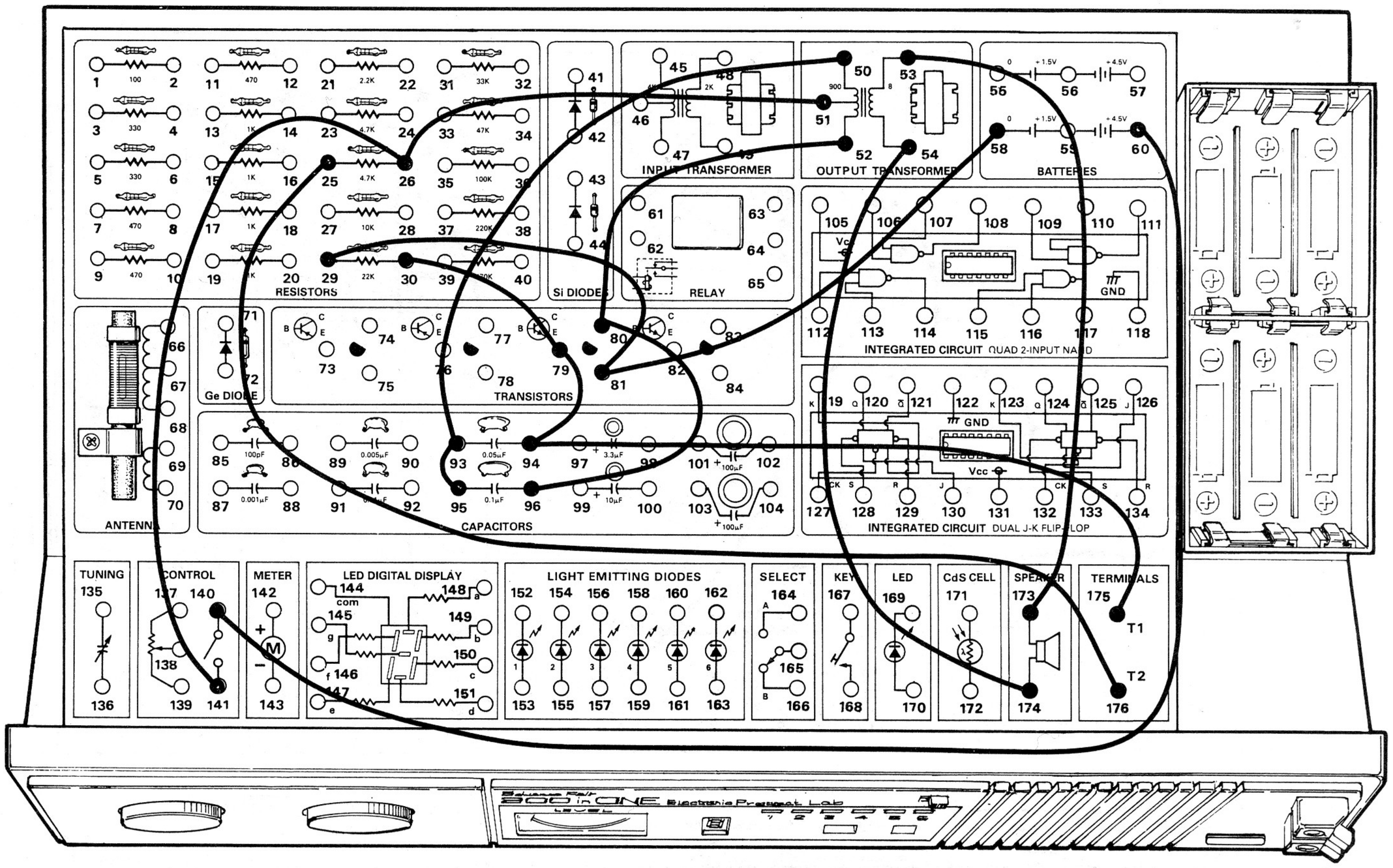

You know about electronic organs that have keyboards ... *but one with a pencil lead?* It's possible with this Project!

To use this Project, you'll need to draw a box four inches long and a quarter-inch wide on a sheet of paper. Fill in the box using a soft pencil. *Make sure that a heavy coating of pencil lead is left in the box.*

We know what you're thinking... *"why on Earth did I do that??"* Believe it on not, that penciled-in box is the keyboard you're going to use to play the organ!

Turn the Control Knob clockwise to ON and place the exposed end of one of the long wires at one end of the penciled-in box. Take the exposed end of the other long wire and place it at the opposite end of the box. Carefully move the two long wires toward each other. You'll discover that you will hear sound from the Speaker when the two long wires are close enough. As you get more skilled in moving the wires, you'll be able to play simple tunes on your Pencil Lead Organ.

Don't be surprised if you have to try several different pencils before you find one that gives good results. A very soft lead (such as the kind in a #1 pencil) will probably work best.

You might be surprised to realize that ordinary pencil lead can conduct electricity, just like a wire. Jot down a few more common items that you think may also be able to conduct electricity – we'll check them later and find out.

NOTES

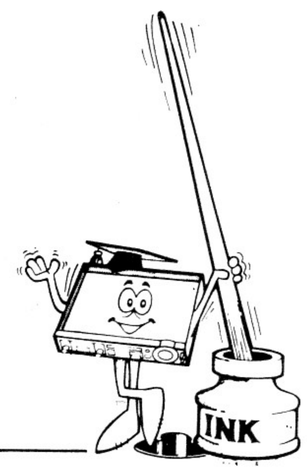

Wiring Sequence

25-176, 29-81-58, 30-79-94-175, 50-93-95, 51-26-141, 52-80-96, 53-173, 54-174, 60-140, T1-LONG WIRE, T2-LONG WIRE.

7. THE ELECTRIC HUMAN

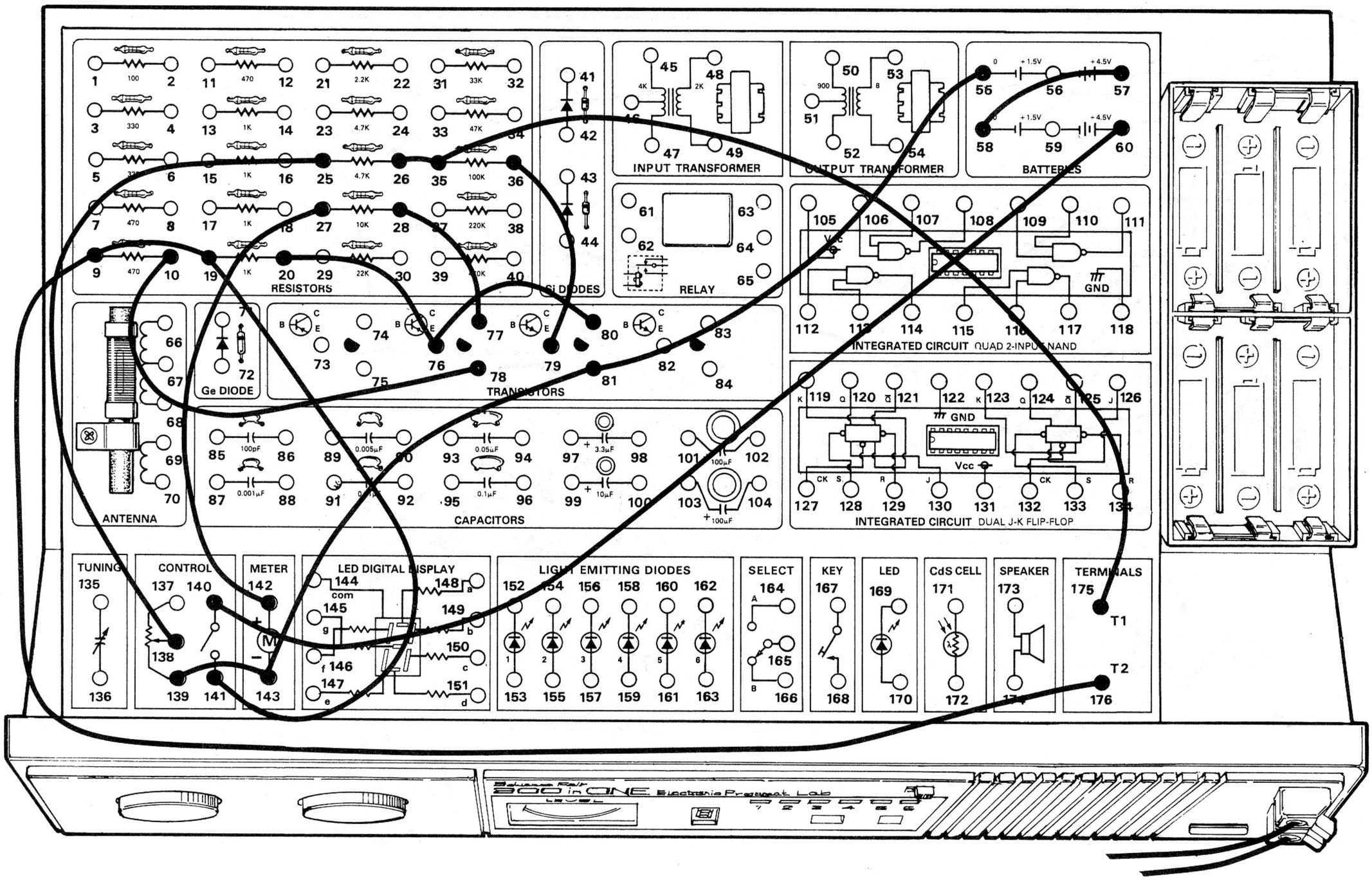

In the last project, we asked you to think of some other things that can conduct electricity. Did you include yourself? It's true – you can conduct electricity just like a wire.

This Project will let you measure how well your body can conduct electricity. Don't worry – the electricity will be so small you won't even know it's there. But you can measure it using the sensitive circuit in this Project.

When you finish making the wiring connections, turn the Control Knob clockwise until you hear a "click." Adjust the Control Knob so that the Meter points to zero. Now take one of the long wires in each hand and grasp them by their exposed ends. Now squeeze the exposed ends and watch the Meter. What happens?

The Meter moved – and it did so because electricity flowed through your body from one long wire to the other. The harder you squeeze the exposed ends of the long wires, the more the Meter will move. Can you guess why?

You can also make the Meter move more by adjusting the Control. (You've probably already figured out that the Control works by controlling the amount of electricity that flows through a circuit, haven't you?)

It's really not too surprising that electricity can flow through your body. We've already seen that water can carry electricity, and your body is mostly water! (Didn't know that eh? Well, now you do!)

A more complicated version of this circuit is used in lie detectors. When a person lies, they are usually nervous. They perspire more, and this makes it easier for their body to conduct electricity. So if someone's body lets more electricity flow than normal, it's often a good sign that they're not telling the truth.

Try this Project as a lie detector with your friends. How well does it work? (And here's an exercise for your brain: You've probably heard of "voltage" and "current." Have any idea what they are? Which one do you think your body conducted? Make a mental note...)

Wiring Sequence

10-78, 20-76-80, 25-138, 26-35-175, 27-142, 28-77, 36-79, 55-81-143-139, 57-58, 60-140, 141-19-9-176, T1-LONG WIRE, T2-LONG WIRE.

8. THE ELECTROSONIC HUMAN

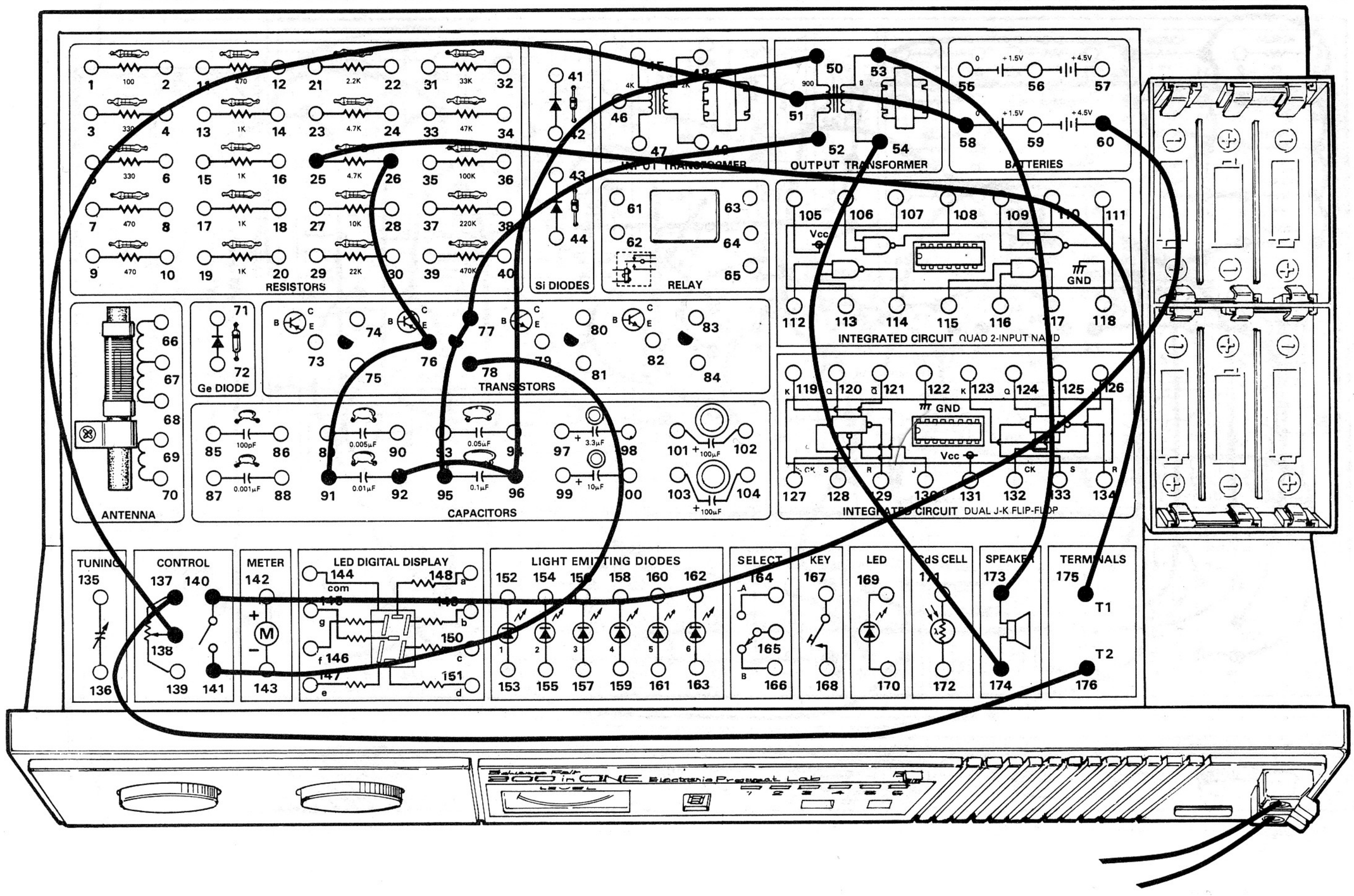

An electrosoniwhatsis human???

Relax ... the title of this Project is just a fancy way of telling you that this circuit is similar to the one in Project 7 but with one big difference – you **hear** when electricity is flowing through your body, not just see it on the Meter.

You use this Project just like the last one – grip the exposed ends of the long wires and squeeze them tightly. The sound you hear from the Speaker will change as the amount of electricity flowing through your body changes.

This Project can be used as a lie detector just like Project 7 (although here the Control changes the tone of the sound from the Speaker). You might want to compare the two circuits and see which one is best at catching fibbers!

You can also use this circuit to see how well other things let electricity flow through them. Try such things as spoons, coins, different packages, furniture, etc. Make notes of things that let electricity flow well and those that don't.

NOTES

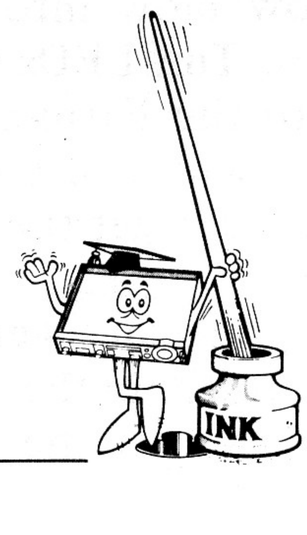

Wiring Sequence

25-175, 26-76-91, 50-96-92, 52-77-95, 53-173, 54-174, 58-51-138, 60-140, 78-141, 137-176, T1-LONG WIRE, T2-LONG WIRE.

9. ELECTRIC BIRTHDAY CAKE

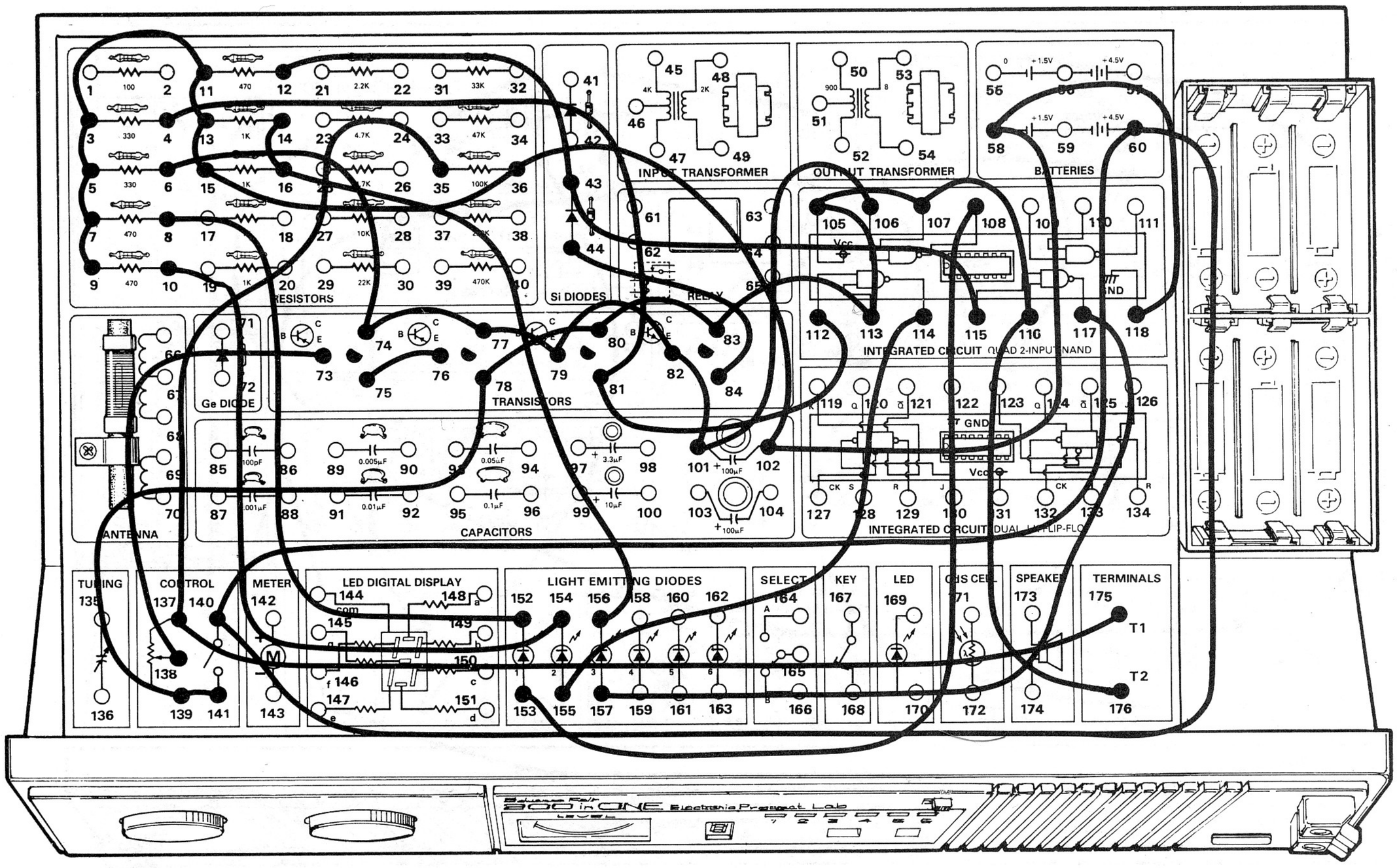

Blowing out all the candles on a birthday cake with a single breath is a big job... but it's not as hard as trying to "blow out" all the LEDs on this Electric Birthday Cake!

This Project is a game that will really test the lungs of you and your friends. This circuit will respond to your breath as it hits the Earphone and turns out the LEDs one-by-one as you blow.

After you finish the wiring connections, connect the Earphone to Terminals 1 and 2 on the front panel of your Kit. Set the Control knob to about its center position (to 5, 6 or 7). You'll see LED 1, LED 2 and LED 3 light up.

Now blow into the Earphone as strongly as you can. The LEDs will go out one by one as you blow into the Earphone. The winner of this game is the one who can make all the LEDs go out or the one who can get them to go out in the shortest time.

If you can't get all the LEDs to go out, turn the Control to the right – this will make it easier to "blow" all the LEDs out. But if you managed to make all the LEDs go out and want a new challenge, turn the Control to the left. This will make it more difficult to "blow" the LEDs out (*you really have strong lungs if you need to set the Control all the way to the left!*).

Notice that this Project uses one of the Integrated Circuits. How do you think this Project "decides" when you've blown hard enough into the Earphone to turn off the LEDs? Make a note of what you think happens – it won't be long before you will be able to explain what happens. (*We promise!*)

NOTES

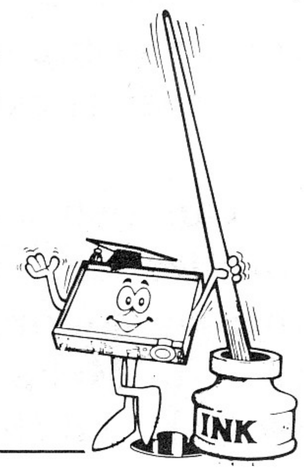

Wiring Sequence

4-81-112, 6-74-77-79-82-101-106, 8-152, 9-7-5-3-11-13-15-36-102-58-118, 10-154, 12-43-115, 14-16-156, 35-137-175, 44-84, 60-140, 73-138, 75-76, 108-153, 114-155, 117-157, 141-139-78-80-83-113-105-107-116-176, T1-EARPHONE-T2.

10. QUICK DRAW

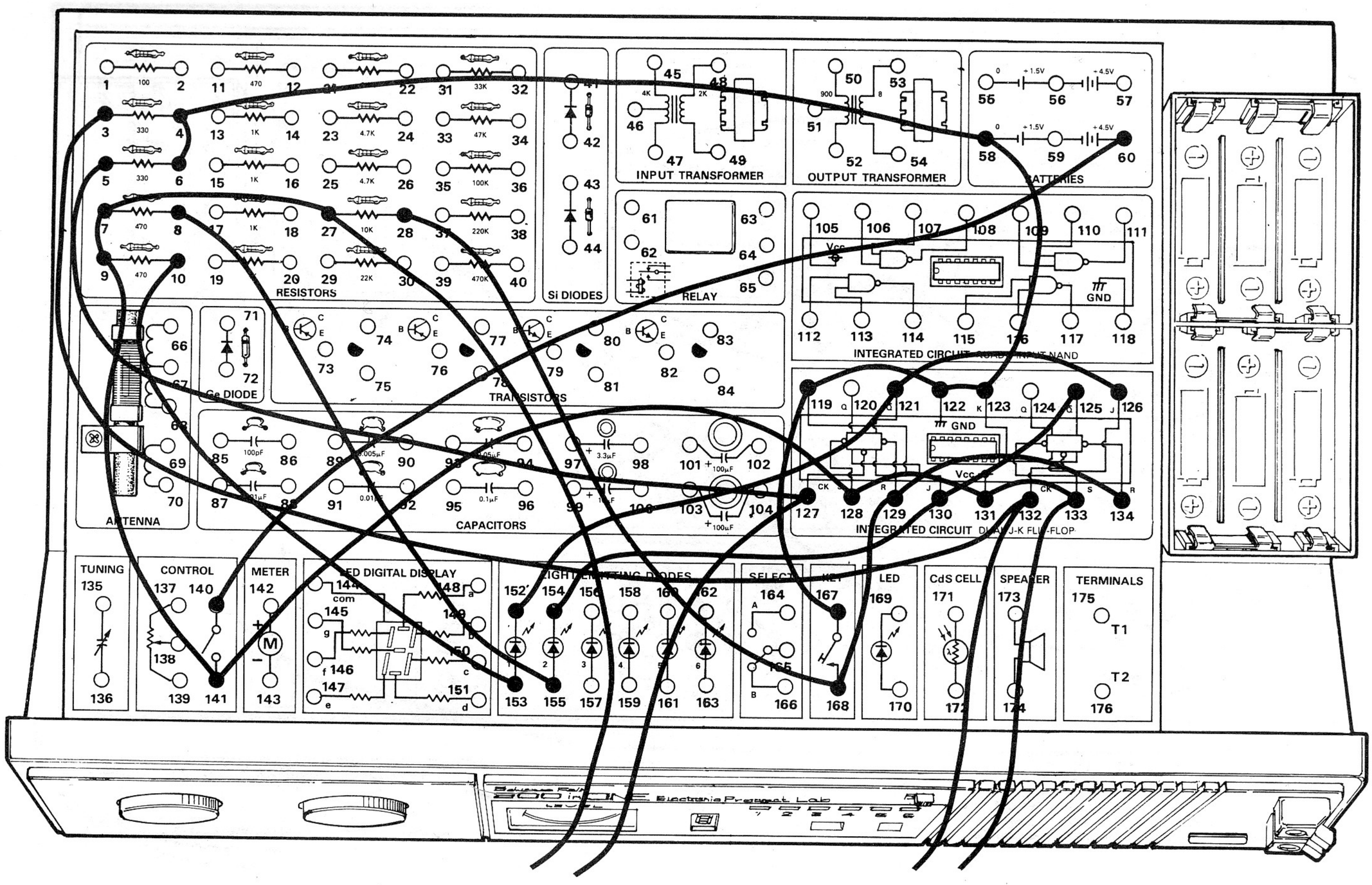

Who's the fastest draw in the West? (*Or even the East?*) Now you can find out with this Project! You and your oppenent face each other like Western gunfighters and "go for it" – fortunately, you'll be reaching for a pair of long wires instead of a six-shooter.

Be sure to use different colored long wires when building this Project (*or you could wind up with your gun in your opponent's holster!*).

To play this game – first you have to build it – then you take the long wires from terminals 132 and 133 while your opponent takes the ones from 127 and 27. Set the Control Knob to ON and press the Key once. Have someone else give the signal to draw. When this happens, try to touch the exposed ends of your long wires together before your opponent does. If you touched your wires first, LED 2 will light up. If your opponent touched first, LED 1 will light. If it's a draw, both LEDs will light.

You can play again just by pressing the Key. This will turn off the LEDs and reset the circuit. Don't hold the ends of the long wires together after they touch – if you do, both LEDs may come on even if the game wasn't a draw.

This Project uses a type of integrated circuit known as a "flip-flop." Can you think of how a part that "flips" and "flops" can be used in a Project like this? Do you think touching the two wires together makes something "flip" or "flop?"

We'll find out more about "flip-flop" circuit parts later. But until then "reach for it!"

NOTES

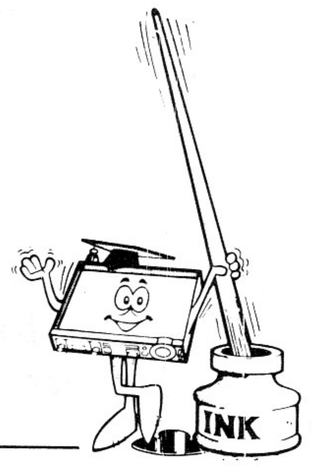

Wiring Sequence

6-4-58-123-122-119-167, 8-155, 10-153, 28-168-129-134, 60-140, 125-130-154, 126-121-152, 3-132-LONG WIRE (blue), 5-127-LONG WIRE (yellow), LONG WIRE (yellow)-27-7-9-141-128-131-133-LONG WIRE (blue).

11. QUICK DRAW II

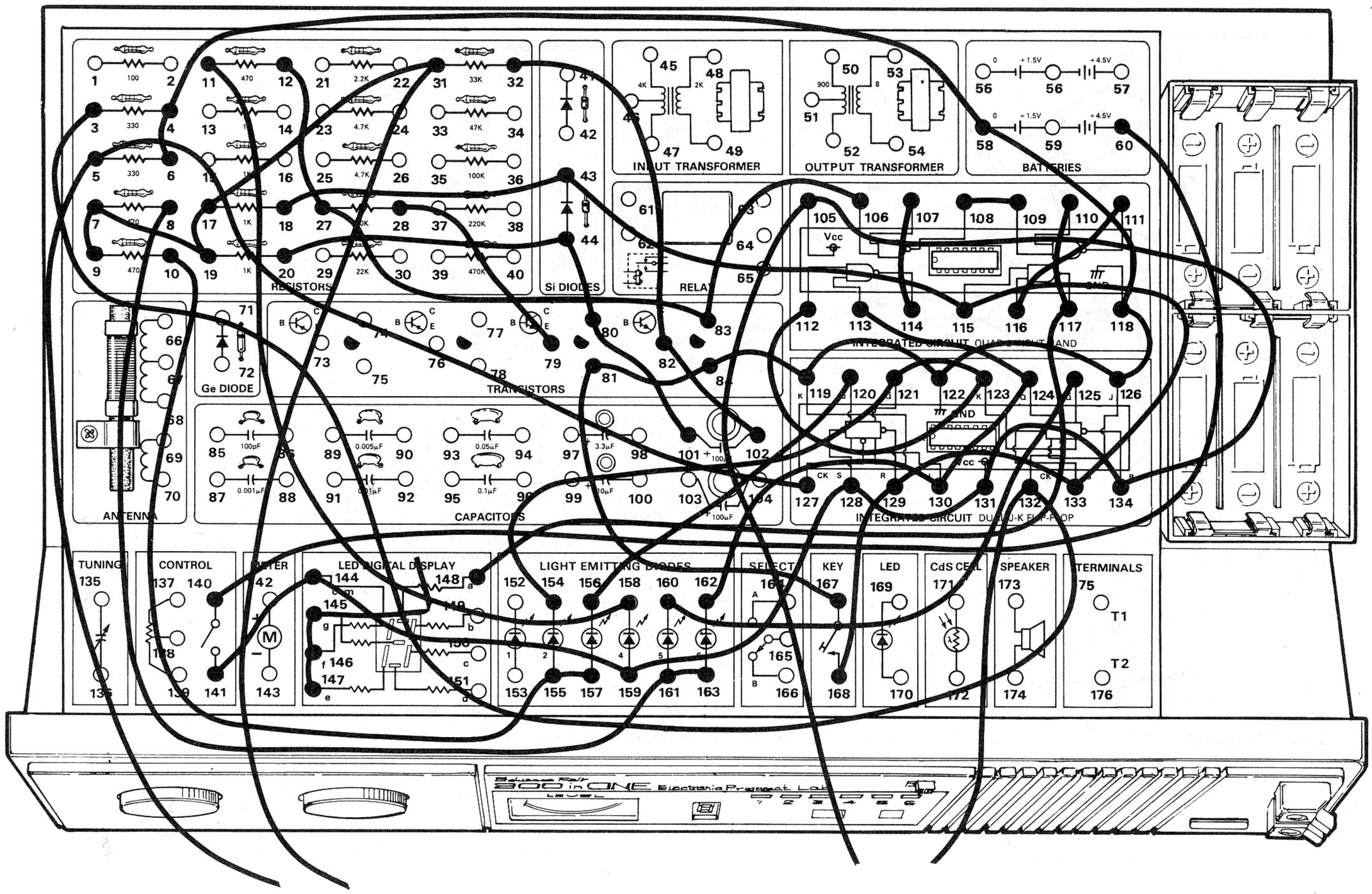

Here's a deluxe version of our Quick Draw game! This one will automatically signal for the two opponents to "fire" ... and it will disqualify either player if they try to "shoot" before the signal.

To play this version, take one set of long wires while your opponent takes the other pair. Turn the Control Knob clockwise to turn power ON. Press the Key once. You'll notice LEDs 3 and 5 are lit. LED 3 represents the player with the long wires attached to terminals 5 and 31 while LED 5 is for the player using the long wires connected to terminals 132 and 105.

As you and your opponent hold your long wires, carefully watch LED 4. When it lights, touch the exposed ends of your wires as quickly as you can. If the player with LED 3 touches first, LED 3 goes out and LED 2 lights up. If the player with LED 5 touches first, LED 5 goes out and LED 6 lights.

This Project doesn't let you cheat either. If a player touches his wires before LED 4 lights, "F" (for Foul) will appear on the Digital Display. LED 2 or 6 will light to indicate which player went too early. If this happens, press the Key. You can then play the game normally. You'll also need to press the Key after playing the game to reset the circuit so you can play again.

This Project demonstrates one of the most fascinating things about digital electronics – the way digital circuits can "think." This circuit decides which pair of wires touched first and if they touched before or after the signal was given. Put on your thinking cap – can you figure out how the circuit was able to do this? (Later you'll find out how it's done.)

NOTES

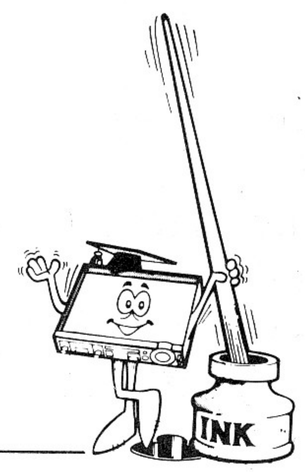

Wiring Sequence

6-4-58-118-126-122-119-84-81-167, 8-161-163, 10-155-157, 11-158, 12-27-83-106, 18-43-115-133-129-168, 20-44-80-101, 28-79, 32-82-102, 60-140, 107-114, 108-109, 110-117-148-145-146-147, 111-116, 112-123-121-154, 113-124-130-162, 120-156, 125-160, 3-132-LONG WIRE (blue), 127-5-LONG WIRE (yellow), LONG WIRE (yellow)-31-17-19-7-9-141-144-159-128-131-134-105-LONG WIRE (blue).

12. ELECTRONIC SAFECRACKING

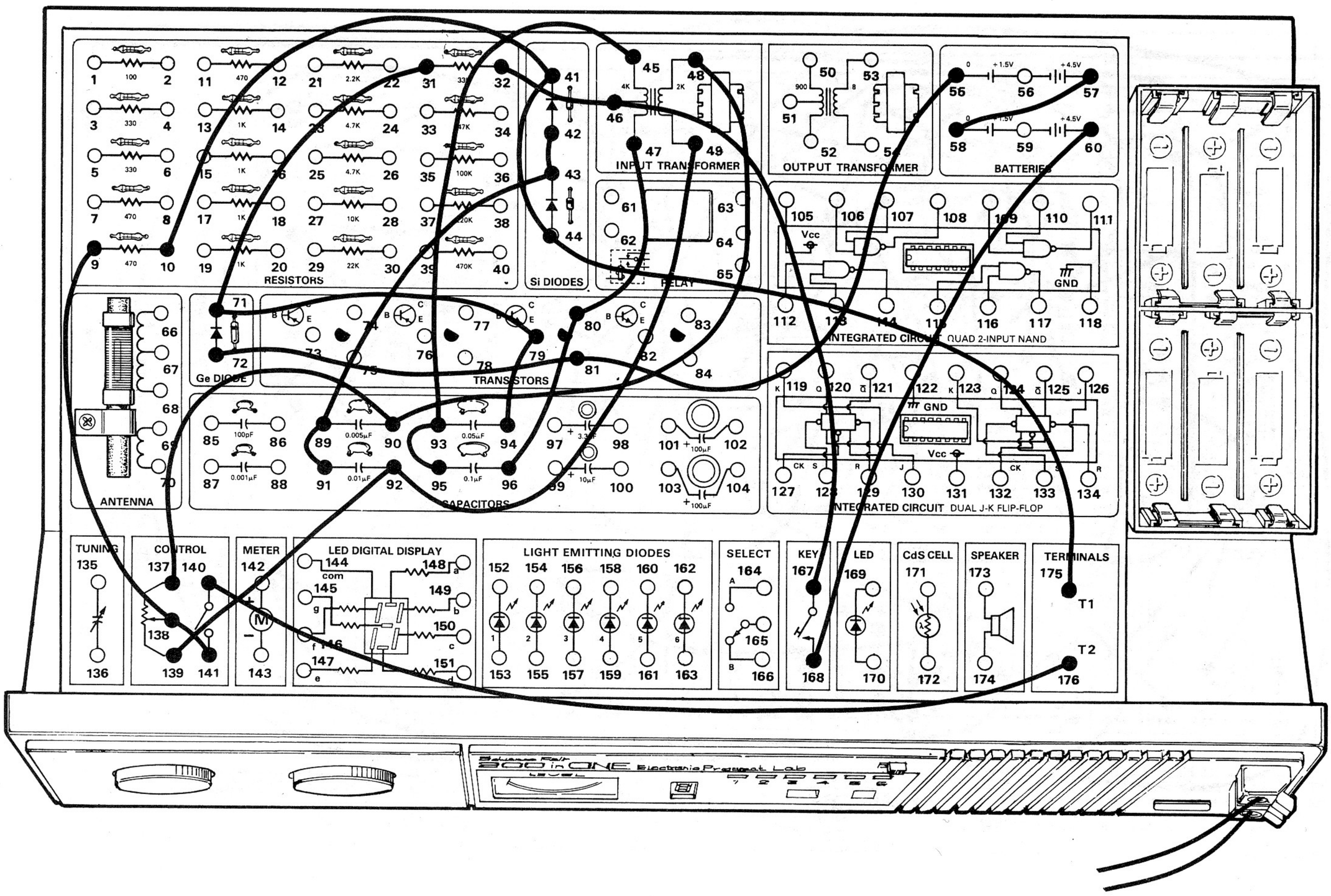

Ever seen a safecracker at work on a television detective or police program? We don't want you taking up a life of crime, so try your safecracking skills on this Project.

Real safecrackers carefully move the safe's dial until they find the right combination which will unlock the safe. In this Project you twist the Control Knob until you find the position that makes the sound produced by the circuit go away. Real safecrackers also often use a stethoscope (like doctors use) to help them hear the movements of the safe's dial. In this Project you'll use the Earphone to hear when you've finally "broken the safe!"

Connect the Earphone to Terminals 1 and 2 on the front panel of your Kit. Turn the Control Knob clockwise until you hear a "click" to switch power ON, and press down on the Key. You'll hear a sound through the Earphone. Now carefully re-adjust the Control Knob. Press the Key again, and you'll notice the sound is either louder or quieter. Again re-adjust the Control Knob and press the Key again. Keep doing this until you find the Control Knob setting where the sound disappears altogether or is faintest. When you find this point, congratulations – you've broken the safe!

This game can get too easy when you use your eyes all the time. Try it blindfolded, and let a friend just briefly press the Key for you each time.

This is another audio oscillator circuit, like our Earsplitter (Project 5). Compare the two projects. What do you think causes two audio oscillators to make different sounds? Make a note of your guess – later we'll see how we can change the sound of an audio oscillator ...

NOTES

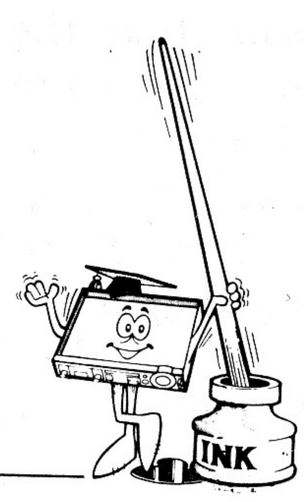

Wiring Sequence

9-138-141, 10-41-44-175, 31-71-79-94, 32-46-167, 42-43-89-91, 45-93-95, 47-80-96, 48-90-137, 49-92-139, 55-81-72, 57-58, 60-168, 140-176, T1-EARPHONE-T2.

13. UFO INVASION

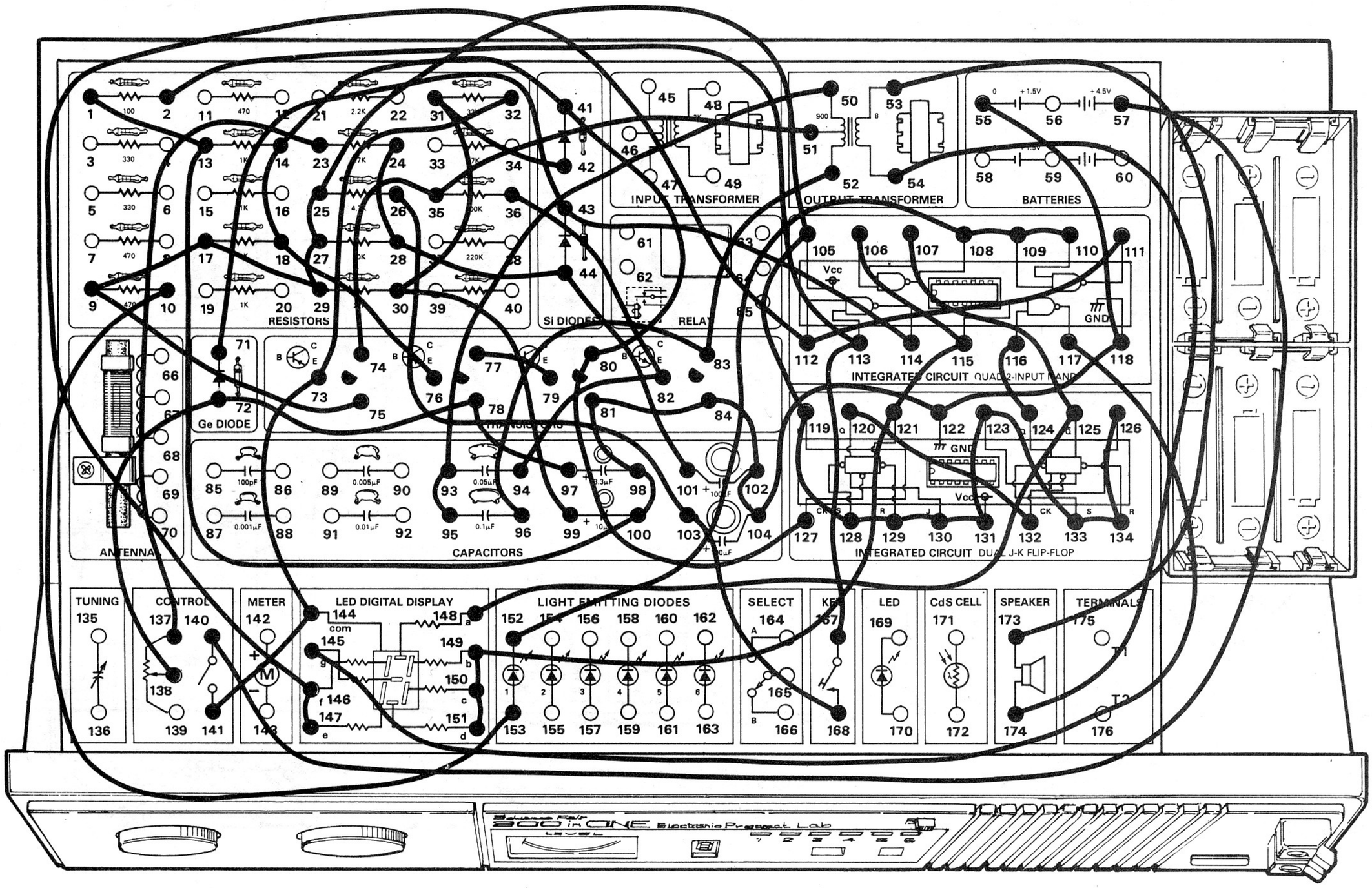

Do you believe in UFOs? Even if you don't, you'll enjoy this game as you try to defend Earth against a UFO invasion!

This is a complicated project, so take your time in making the wiring connections. Turn the Control Knob clockwise to switch power ON. The LED Digital Display will show the letters "U", "F" and "O" in a repeating sequence. At the same time you'll hear a sound from the Speaker indicating that the UFO is flying overhead. *It's up to you to save Earth from the invasion!*

To stop the UFO, you'll need to use your laser cannon. We've cleverly disguised this as the Key. Look carefully at LED 1. When this lights up, it means that the UFO is now within the range of your laser cannon. Press the Key to fire. If you hit the UFO, the Digital Display will stop on one letter and you'll hear a steady sound from the Speaker. If this happens, congratulations! You saved Earth from the UFO!

(Of course, you might miss the UFO. If this happens, wait for LED 1 to light again and fire your laser cannon once more.)

The UFO display and sound will start again a few moments after you make a hit. If you want to speed up or slow down the UFO, adjust the Control Knob for the desired speed.

As you play this game, you'll notice that hitting the UFO isn't a matter of luck. You'll find that when a certain letter appears on the Display is the best time to press the Key. Why do you think this is so?

Wiring Sequence

1-13-100-98-81-84-102-104-122-118-55, 2-113-167, 10-153, 23-137, 24-28-44-101, 26-103-168, 32-73, 36-82-94, 42-31-30-99, 50-93-95, 51-35-74, 52-83-96, 53-173, 54-174, 57-140, 71-43-114, 76-18-14-41-80-127, 77-79, 97-78-72-138, 106-115-121-149-150-151, 107-125-148, 110-109-108-152, 111-112-146-147, 116-124, 117-145, 120-132, 126-134-133-123-131-130-129-128-119-105-25-27-29-17-9-75-144-141.

14. TUG OF WAR

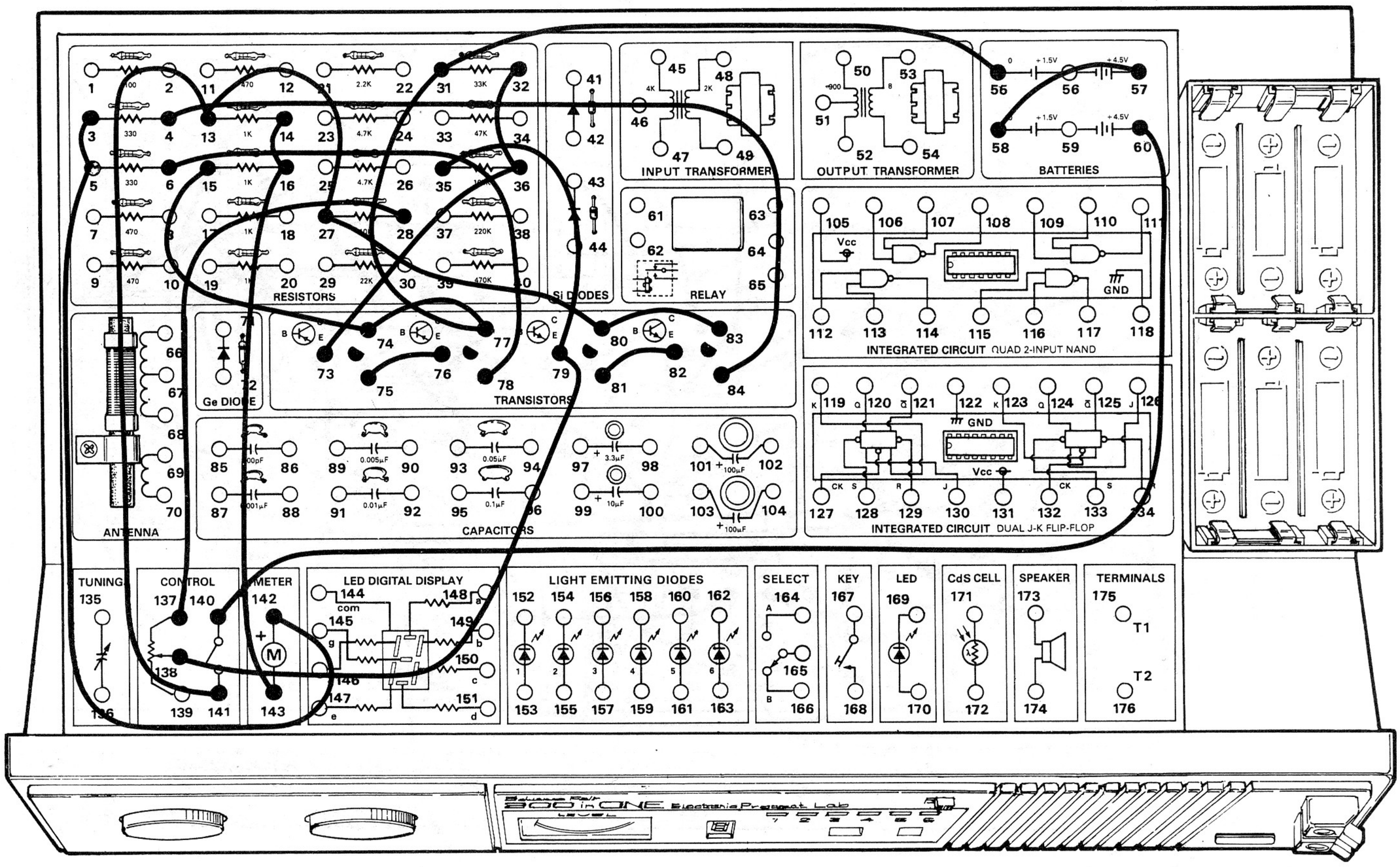

You won't need a set of bulging muscles for this tug of war. This Project makes use of your body's ability to conduct electricity that we found out about in Projects 7 and 8.

When you finish wiring this Project, set the Control Knob to ON. Adjust the Control Knob so that the pointer of the Meter is at the center of the scale. Take the yellow long wires (connected to terminals 32 and 83) while your opponent takes the blue long wires attached to terminals 15 and 138. Grip the long wires by their exposed ends as tightly as you can. Look at the Meter – what's happening?

The Meter pointer will swing back and forth as you and your opponent grip the long wires. This amount of swing (and in which direction) depends upon which person's body is letting the most electricity flow from one long wire to the other. The harder you grip, the more electricity your body will conduct. And any perspiration that develops on your fingertips will help your body conduct even more electricity.

You can also use this Project to determine if one object conducts electricity better than the other. If you do, be sure to keep notes of your results.

NOTES

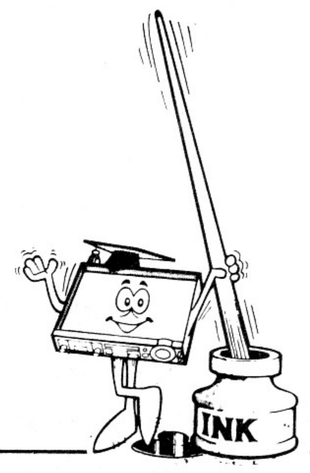

Wiring Sequence

3-5-142, 4-84, 6-78, 14-16-143, 28-137, 35-79-138-LONG WIRE (Blue), 55-31-77-74-15-LONG WIRE (Blue), 57-58, 60-140, 73-36-32-LONG WIRE (Yellow), 75-76, 81-82, 141-13-27-80-83-LONG WIRE (Yellow).

15. SHOT IN THE DARK

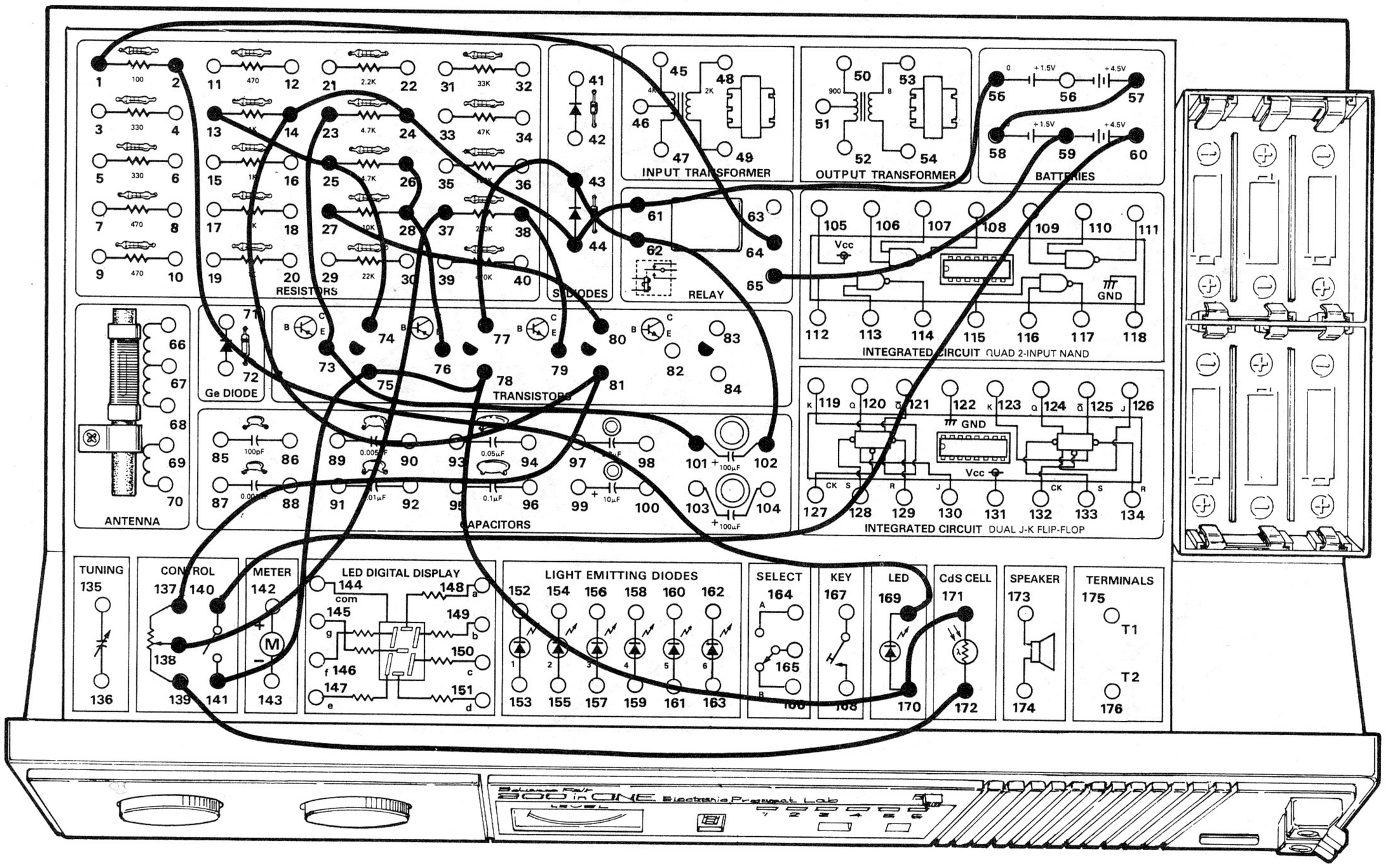

Think you have good night vision? This Project will let you find out for sure. It tests your aim – *in a totally dark room!*

Your "gun" for this game is any ordinary flashlight. Just place your Kit, after the Project is wired up, in a completely dark room. Use your flashlight to "shoot" the Kit with a beam of light. If you aim correctly, the LED will light up.

This Project uses the CdS Cell we first tried with our Electronic Candle (Project 3). You'll remember from that project that the CdS Cell is sensitive to light and can control electronic circuits. In the Electronic Candle project we used the CdS Cell to turn off the LED. Here we'll do just the opposite.

After you finish the wiring connections, put this Project in as dark a room as possible. Turn the Control Knob clockwise to switch power ON. Use a flashlight to shine a beam of light on the CdS Cell. Carefully adjust the Control Knob until the LED lights. You're now ready to test your skill!

First try hitting the CdS Cell from about five feet or so. As you aim improves try increasing the distance. For the most fun, try hitting the CdS Cell just by quickly switching your flashlight on and off instead of using a steady beam of light.

Don't be surprised if you have to adjust the Control Knob very carefully to get the LED to come on when light strikes the CdS Cell. For the best adjustment, be sure you have the kit in a completely dark room and use a sharply focused flashlight (not a fluorescent lamp or other light). Once you've found the best setting, don't change it.

Good luck. May you become "the fastest flashlight in the West!"

Wiring Sequence

1-64, 2-169, 13-25-74, 23-73-101, 26-28-76, 37-138, 27-80, 38-79,
55-61-44-24-14-81-137, 57-58, 59-65, 60-140, 77-43-62-102,
141-75-78-170-171, 139-172.

16. BURGLAR ALARM

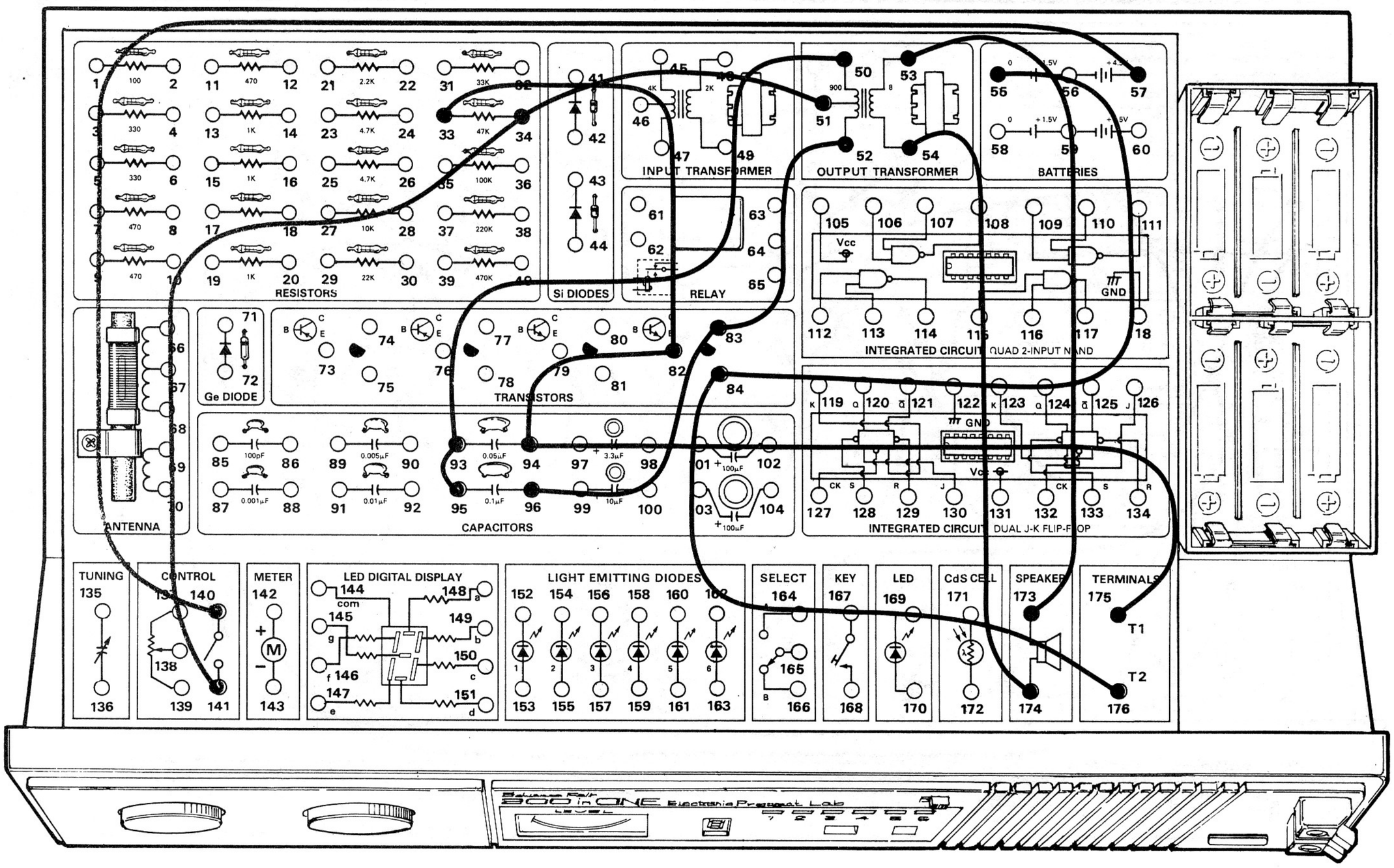

Here's a burglar alarm project that's really sneaky! You can locate it away from the object you want to protect — *and no one can know about the alarm until after they've set it off.*

This Project uses the long green length of wire included with your Kit. Normally, this wire is used for an antenna in radio projects. But in this Project it's used to trip the alarm.

Before using this Project, make sure that the long green wire is connected between terminals 1 and 2 on the front panel of your Kit. Set the Control Knob to ON. Now pull the green wire out of either terminal 1 or 2. What happens?

You probably got your ears blasted! Whenever the green wire is disconnected, the alarm will sound. This means you could tape the green wire to a door, window or drawer so that the alarm would sound if one of those objects were moved, causing the green wire to be pulled out of one of the two terminals. (*Now you can find out who's been messing around your closet or drawers!*)

You're probably wondering how **disconnecting** a wire can cause a circuit to operate. Here's a hint: if you give electricity two or more paths to follow, it will always take the way that's easiest. It will take a harder path only if you remove the easier one.

With that clue, do you think you can explain how this Project works? Make a note of your explanation — later on you'll understand exactly how it works. In the meantime, have fun catching people in the act with this burglar alarm.

NOTES

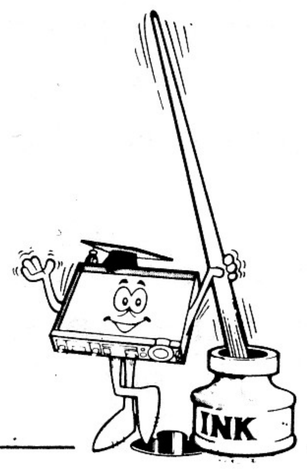

Wiring Sequence

33-82-94-175, 50-93-95, 51-34-141, 52-83-96, 53-173, 54-174, 55-84-176, 57-140, T1-GREEN WIRE-T2.

17. SOS ALERT

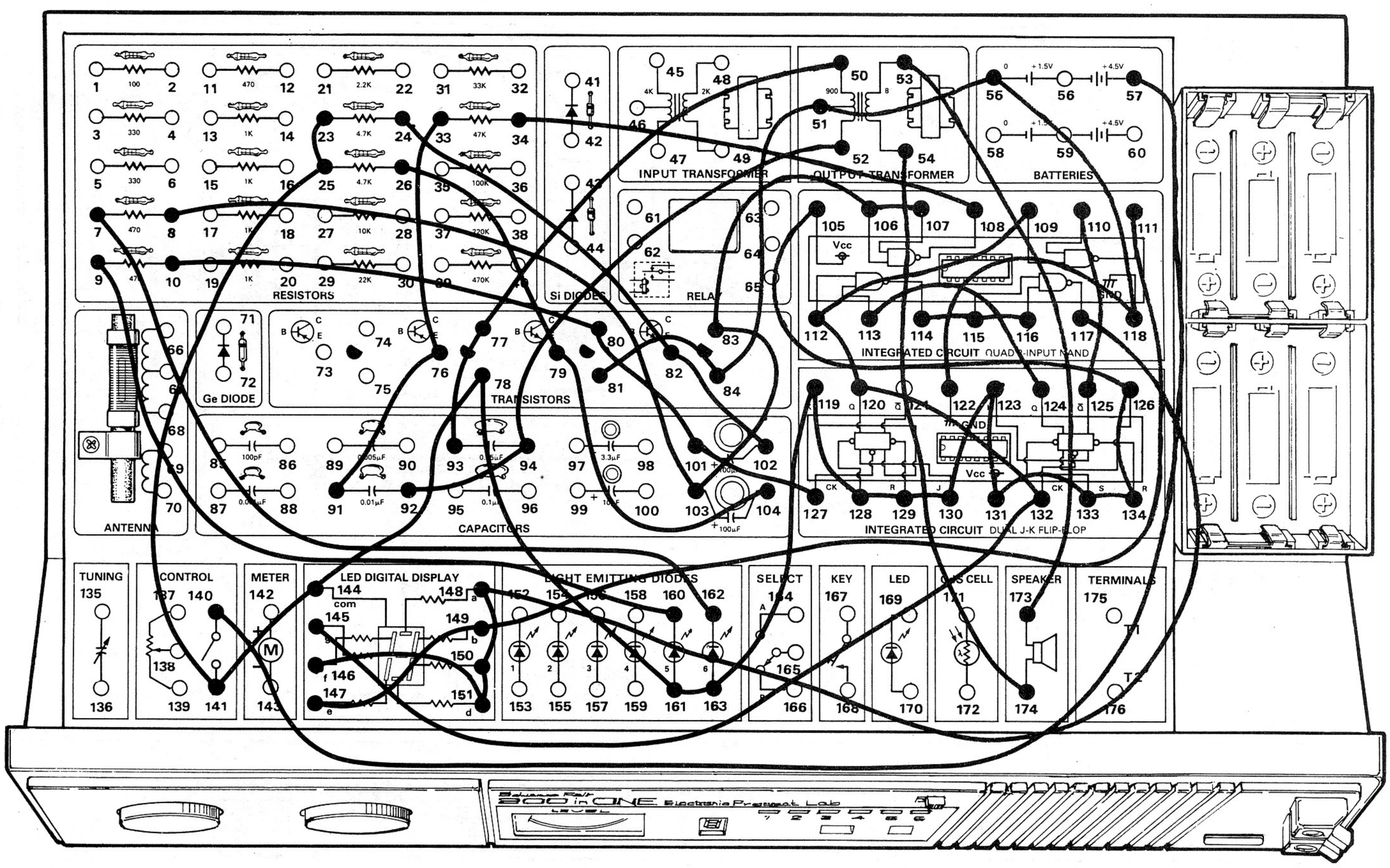

We've already used the two Integrated Circuits in your Kit and the Display to create some unusual circuits (such as UFO Invasion, Project 13). This Project also uses the two Integrated Circuits and the Display to create an automatic SOS alert system.

When you turn the Control Knob clockwise to switch power ON, you'll hear sound from the Speaker and see the letters "SOS" on the Display. You'll also see LEDs 5 and 6 light and go off as if they're "taking turns" being lit.

Notice how the Digital Display changes. It almost seems like the circuit is counting "1, 2, 3, 4... 1, 2, 3, 4..." over and over. It turns out that's pretty close to what is actually going on. (And it probably won't surprise you to know such a circuit is called a counter.)

Now put on your thinking cap... do the two LEDs blinking on and off remind you of anything? (*No, don't say they remind you of blinking LEDs!*) Back in Project 2 (The Noisy Light) we used a multivibrator circuit. This Project uses both a multivibrator and a counter circuit.

That points out something very important in electronics — *even the most complex devices are nothing but collections of simpler circuits.* Simple circuits are the "building blocks" which make up even complex computers. Soon you'll be using such "building blocks" to design your own circuits. (*And it won't be too long!*)

NOTES

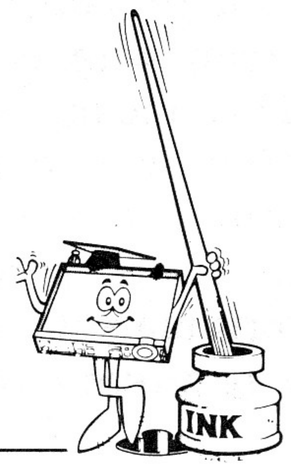

Wiring Sequence

7-162, 8-103-83-106-107, 9-160, 10-80-101-127, 23-25-141-144-78-161-163-119-128-129-130-123-131-133-134-126-105, 24-82-102, 26-79-104, 33-76-91, 34-108, 50-77-93, 52-94-92, 53-173, 54-174, 57-140, 81-84-51-55-118-122, 109-112-120-132-145, 110-125, 111-149-147, 113-124, 114-115-116, 117-148-150-151-146.

18. TARGET RANGE

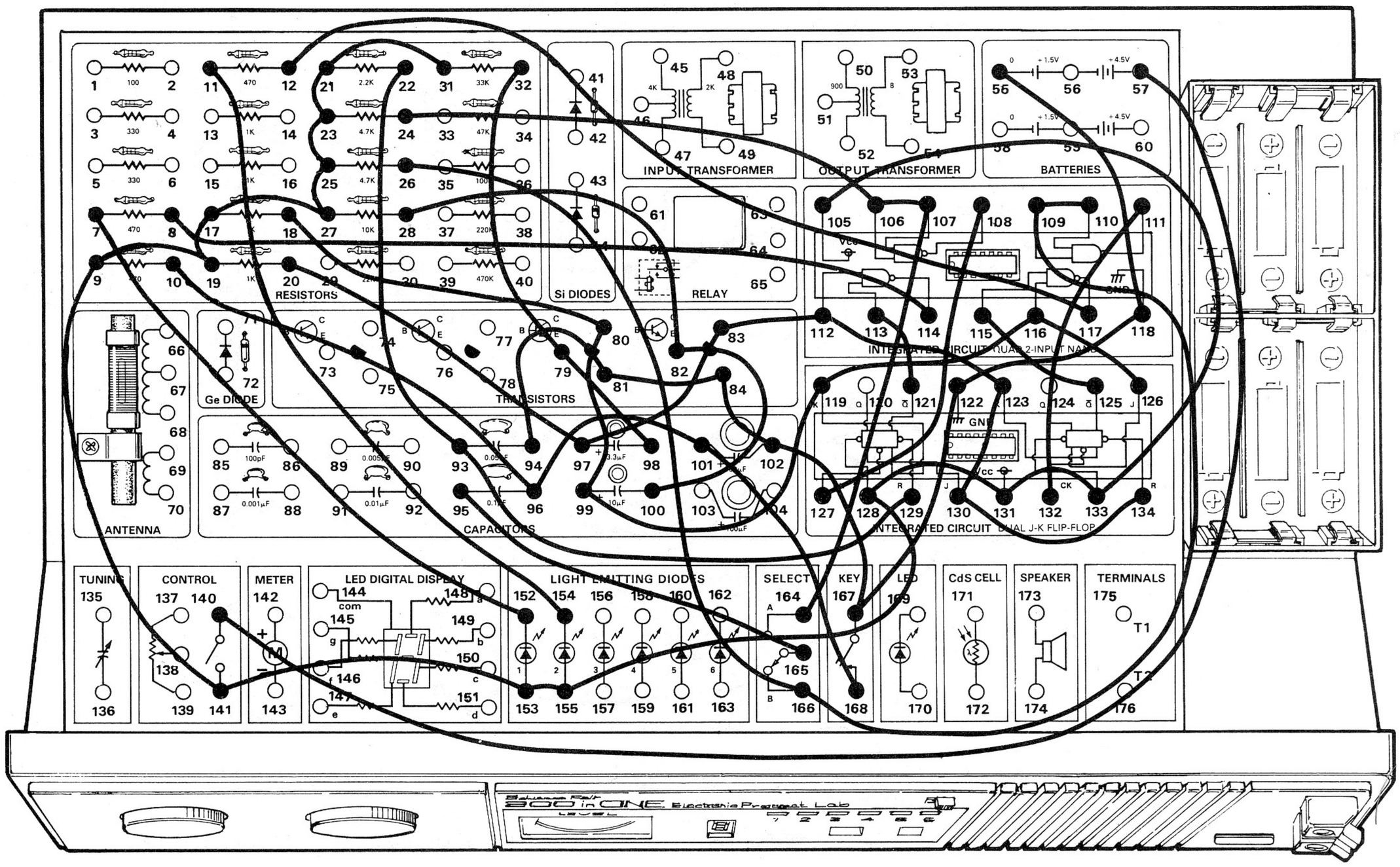

If you think a moving target is hard to hit, just wait until you try to hit a pair of blinking LEDs! This Project will test your ability to anticipate what an electronic circuit will do.

To play, set the Select Switch to A and then set the Control Knob to ON. LEDs 1 and 2 will light and start to blink off and on very rapidly (it will look almost like one light moving from side to side). Your "rifle" will be the Key. When you think the time is right, press the Key. If you "fired" at the right moment, LED 1 will go out. Set the Select Switch to B and press the Key again. If your "aim" is good, you'll "shoot out" LED 2.

If you're a really good "shot", you might get LED 1 and 2 out with just one press of the Key. On the other hand, it might take several presses of the Key just to get one of the LEDs to go out. Be sure to set the Select Switch to B before trying to "shoot" LED 2. If you don't, you'll discover that... (*hold on, we shouldn't tell you everything. Try it for yourself and see what happens.*)

This is another Project using digital electronics and the "flip-flop" integrated circuit. Do you think something "flips" or "flops" when you press the Key to make the LEDs go out?

Try to think that one out. In the meantime, see how your skill improves with this game. Can you manage to get both LEDs with a single shot?

NOTES

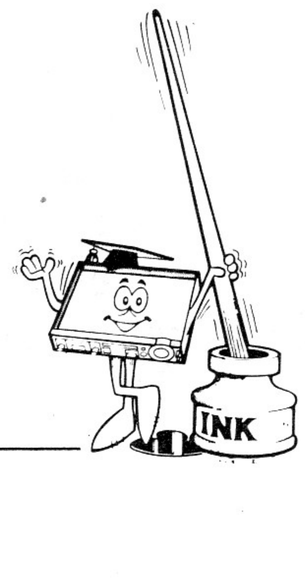

Wiring Sequence

7-152, 8-114, 10-96-101-168, 11-154, 12-117, 18-80-99-119-116-126, 20-97-83-112-123-130, 22-93-129-134, 24-106-107-164, 26-166-109-110, 28-82-100, 31-21-23-25-27-17-19-9-141-153-155-128-131-133-105, 32-79-98, 55-118-122-167-102-84-81-94, 57-140, 95-165, 108-127, 111-132, 113-121, 115-125.

19. "CATCH" THE EIGHT

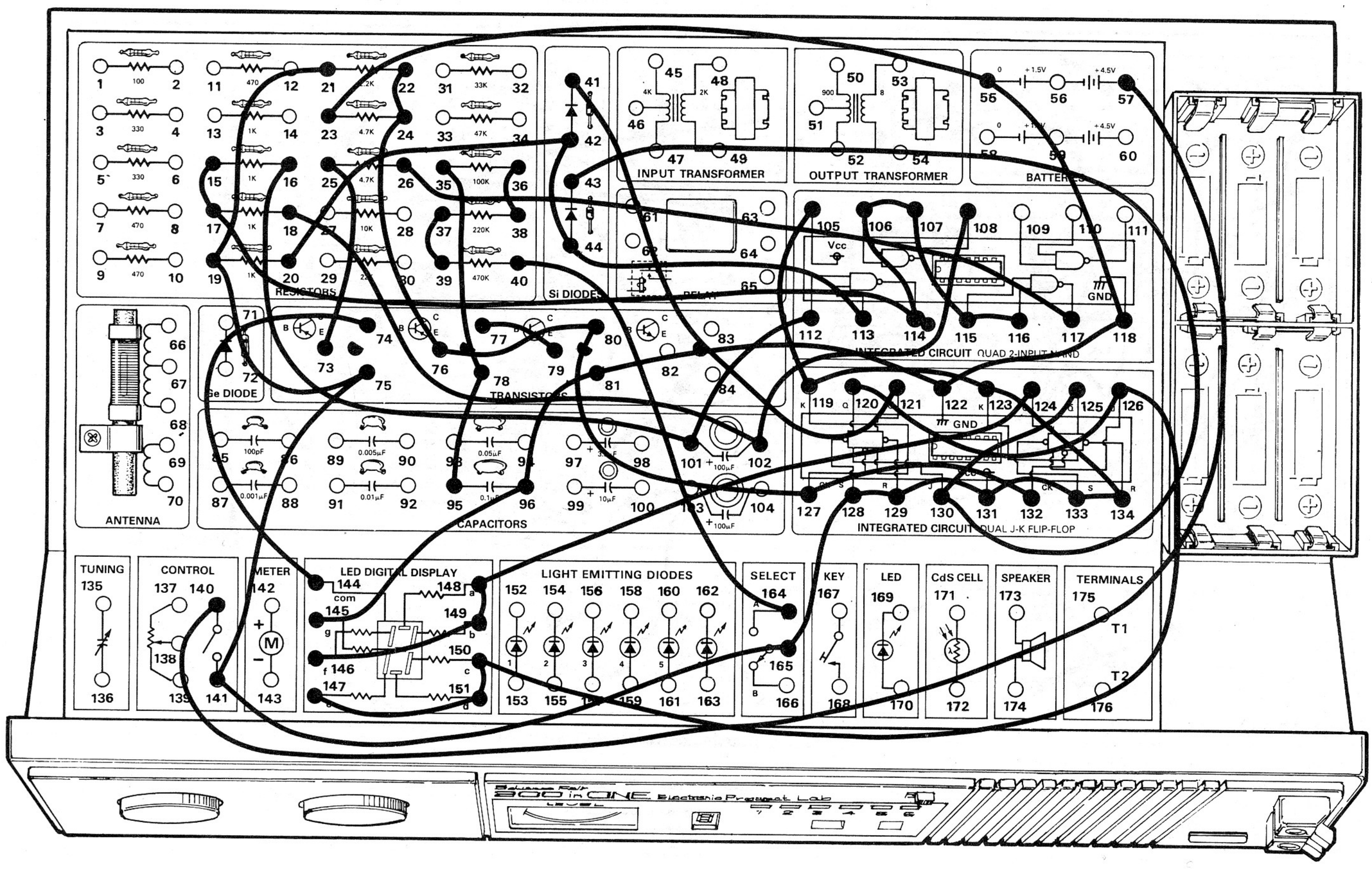

Here's another Integrated Circuit and Display game to test your wits. In this Project, you won't be "shooting" at LEDs... instead, you'll be trying to catch an eight!

Once you finish wiring this project, set the Select Switch to A. Then turn the Control Knob clockwise to ON. On the Display you'll see the upper and lower parts pf "8" are flashing alternately. Now carefully note the pattern of flashing. You'll note there's a moment when the Display shows nothing – when you think you can anticipate the moment of no display, slide the Select Switch to B. If you do it at exactly the right moment, a complete 8 will be "captured" and flash over and over on the Display. If you don't – well, set the Select Switch to A and try again.

This Project is also made up of two simple circuits. From what we've discovered so far, which two circuits are most likely found in this Project? (Don't forget to keep a record of your guess ...)

NOTES

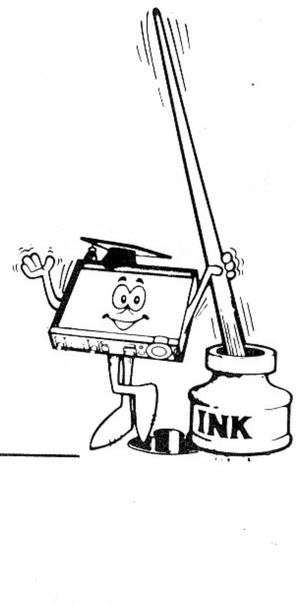

Wiring Sequence

15-17-114-106-107-115-116, 16-101-112, 18-102-108, 20-42-44-113, 21-19-75-141-165-128-129-131-133-134-123-119-105, 22-24-76-80-127-132, 23-55-118-122-81-96-145, 25-73, 26-117, 35-78-95, 36-38, 37-39, 40-164, 41-121, 43-130-125, 57-140, 74-144, 77-79, 120-126-150-151-147, 124-148-149-146.

20. MARCHING LEDS

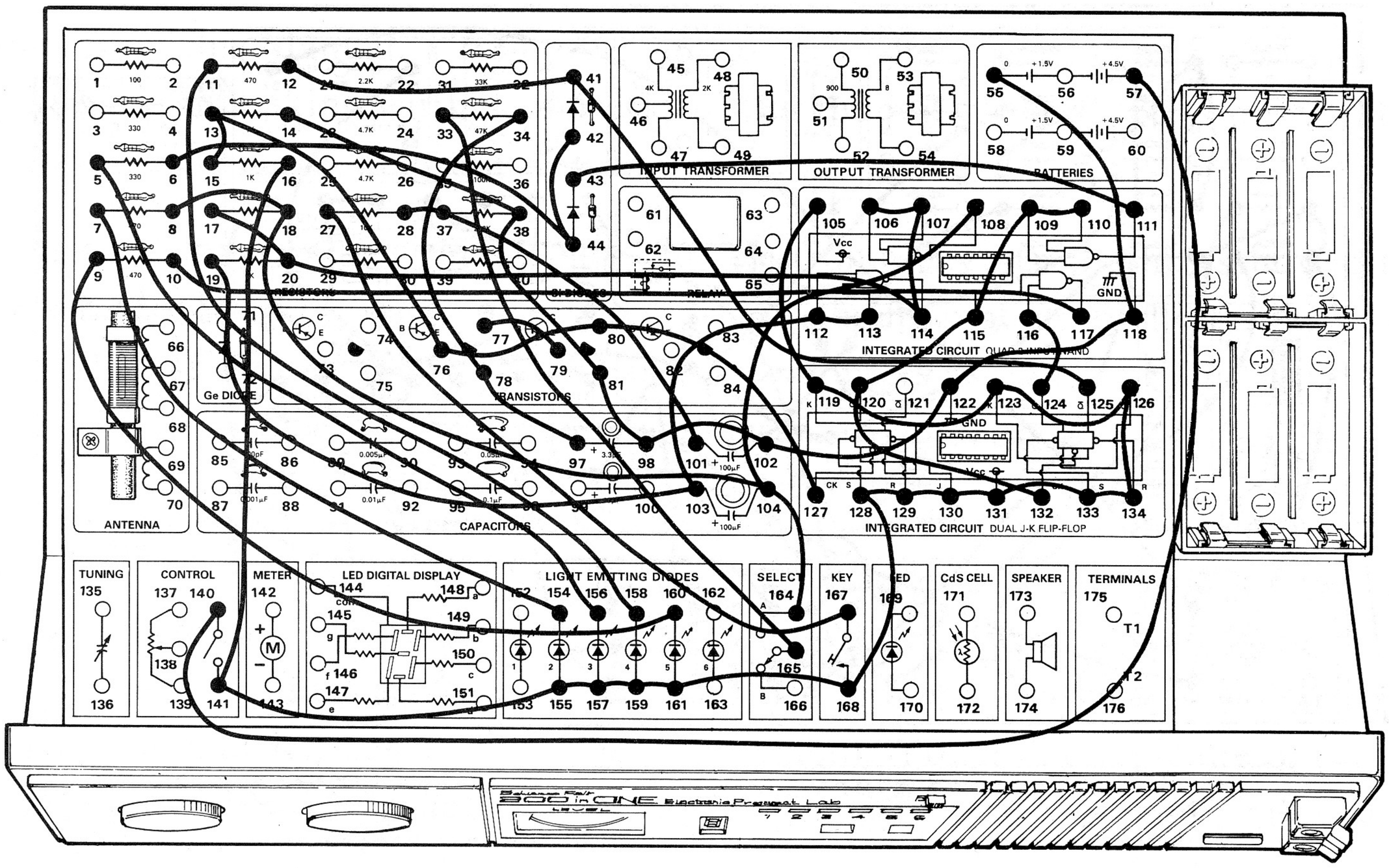

Make way for the parade of marching LEDs! This Project will let you send LEDs "moving" across the front panel of your Kit as you press the Key.

When you finish the wiring, set the Select Switch to A. Turn the Control Knob clockwise to switch power ON. LED 2 will light and start flickering (you might also have other LEDs light; this is normal). Keep pressing the Key. First LED 3 will light, followed by LEDs 4 and 5. As you keep pressing the Key, you'll have LEDs 3, 4 and 5 lighting in turn. It looks just like a parade of LEDs marching down the street.

While pressing the Key, try quickly setting the Select Switch to B. What happens?

The LEDs come to a screeching halt. The LEDs are either lit or off just like they were the instant you set the Select Switch to B. Now try setting the Select Switch again to A. The LEDs will again start "marching."

While you have the Select Switch at A, stop pressing the Key and watch what happens to the LEDs. Can you guess why this takes place?

This Project also uses the "flip-flop" Integrated Circuit. You can easily see why this device is so useful in electronics!

NOTES

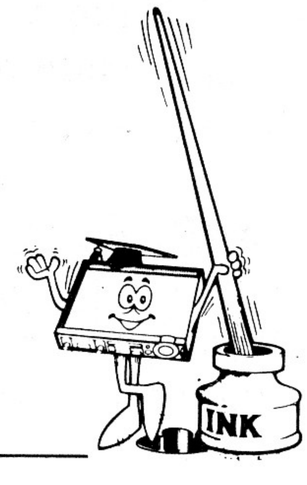

Wiring Sequence

5-156, 6-44-42, 7-154, 8-18-104-108, 9-160, 10-117, 11-158, 12-41-125, 14-38-81-98-102-122-118-55, 15-13-76-80-127, 16-141-155-157-159-161-168-128-129-130-131-133-134-126-123-119-105, 17-20-114-107-106, 19-103-112-113, 27-167, 28-37-101-164, 33-165, 34-78-97, 43-111, 57-140, 77-79, 110-109-115-120-132, 116-124.

21. TURN SIGNAL FLASHER

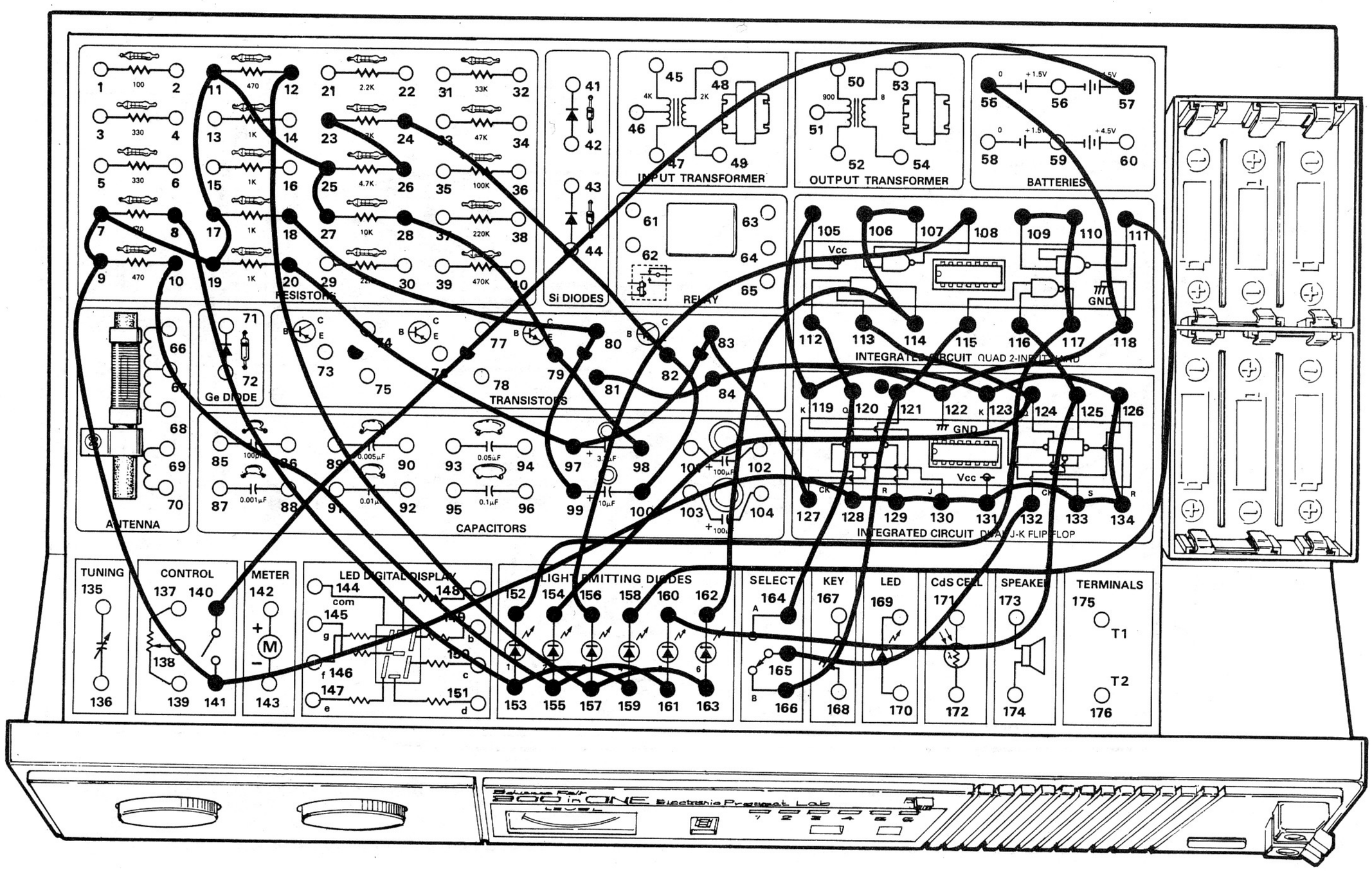

In Project 20, you made LEDs "move" by pressing the Key. But your finger probably got tired after a while, so here's a circuit that does the same thing automatically.

This circuit is actually used in many devices such as traffic signals. When you finish the wiring connections, set the Select Switch to A. Then set the Control Knob to ON. You'll see the LEDs lighting in a pattern from left to right. Now set the Select Switch to B. The same pattern will now go from right to left.

This Project uses two types of circuits we've mentioned earlier. Take a good look at this Project... can you guess which two circuits we're talking about? Take your best guess, and then turn this Manual upside down for the answers.

The circuits used are a multivibrator and a counter. Wait a second... we've seen how a multivibrator can turn things off and on. Think it could also make a "flip-flop" Integrated Circuit "flip" or "flop"? Make a note of your answer.

NOTES

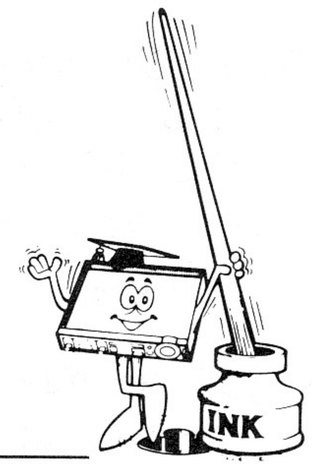

Wiring Sequence

8-153-159, 10-155-161, 12-157-163, 18-80-99, 20-97-83-127, 24-82-100, 23-26, 27-25-11-17-19-7-9-141-128-129-130-131-133-134-126-123-119-105, 28-79-98, 55-118-122-84-81, 57-140, 107-106-114-162, 108-156, 109-110-117-152, 111-158, 112-120-164, 113-124-154, 115-121-166, 116-125-160, 132-165.

22. LEAPIN' LEDS!

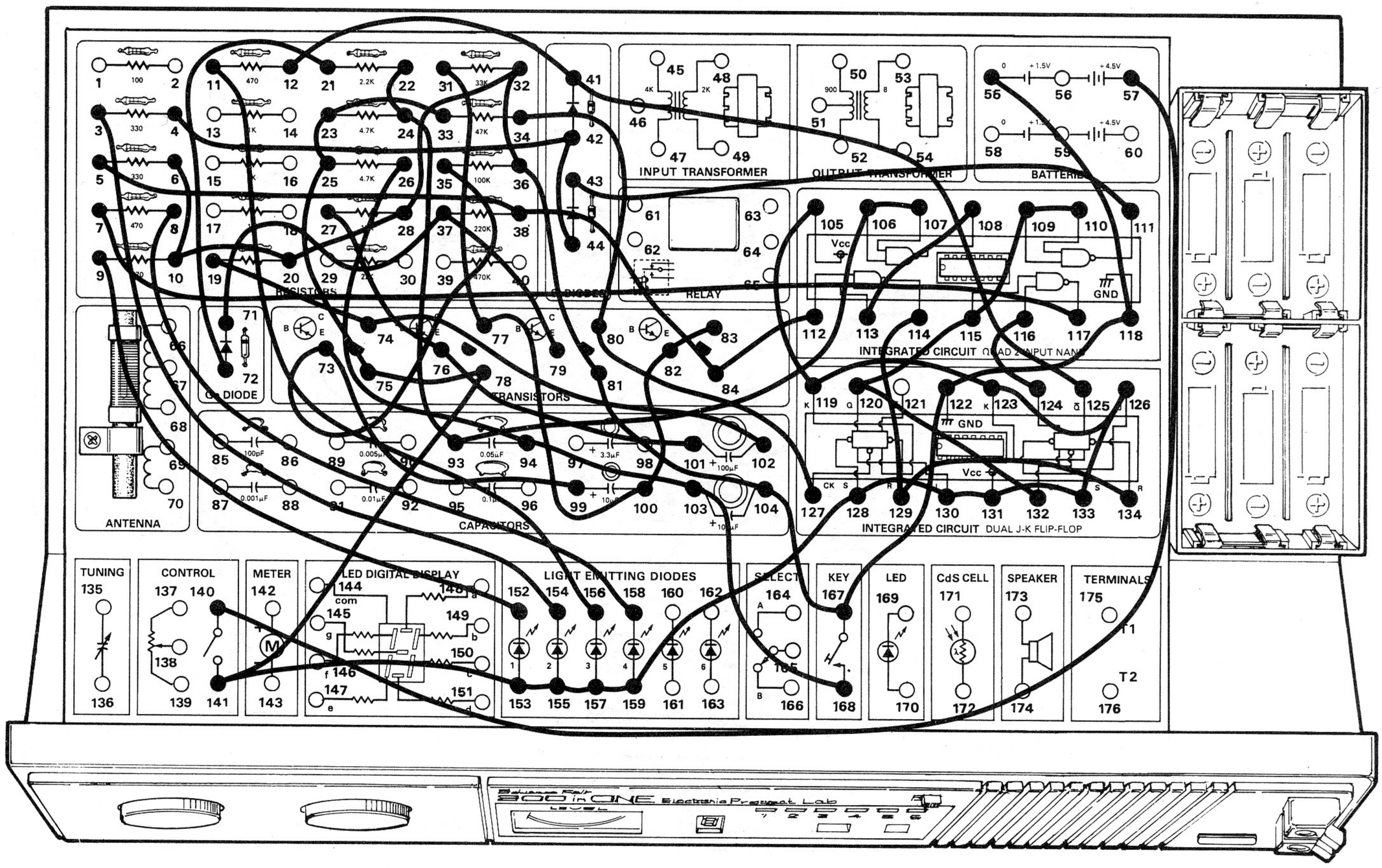

Here's game to see how fast you are on the trigger (*or at least the Key!*). The object is to light LEDs 1 through 4 as quickly as you are able or with as few presses of the Key as you can.

To play, turn the Control Knob clockwise until you hear a "click" to turn power ON. LED 1 will light. Now press the Key until LED 2 lights. But, if you're not lucky, only LED 1 will light. Continue to try to get all the LEDs to light up (LED 1, 2, 3 and 4).

The secret of this game is to press the Key at exactly the right moment to light the LED. Timing's been an important part of all the digital circuits we've played with so far. You've also noticed how digital circuits seem to do either one of two things (for example, a LED lights or it doesn't light). How do you think a digital circuit works? Make a note of your ideas – see how close you can come to the right answer.

NOTES

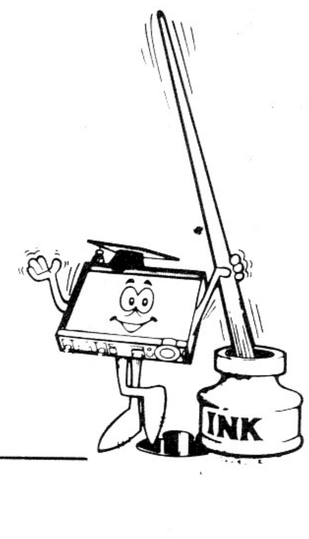

Wiring Sequence

3-154, 4-42-44, 7-117, 8-158, 9-152, 6-10-20-28-32-36-81-104-167-122-118-55, 11-156, 12-41-125, 5-38-84-112, 19-74-102, 21-72, 22-24-93-106-107, 26-94-103-168, 27-76-101, 31-77-100-82-83, 33-23-25-75-78-141-153-155-157-159-128-130-131-133-126-123-119-105, 34-80-127, 35-73-99, 43-111, 57-140, 71-37-79, 108-113, 114-129-134, 110-109-115-120-132, 116-124.

23. LIGHTS OUT

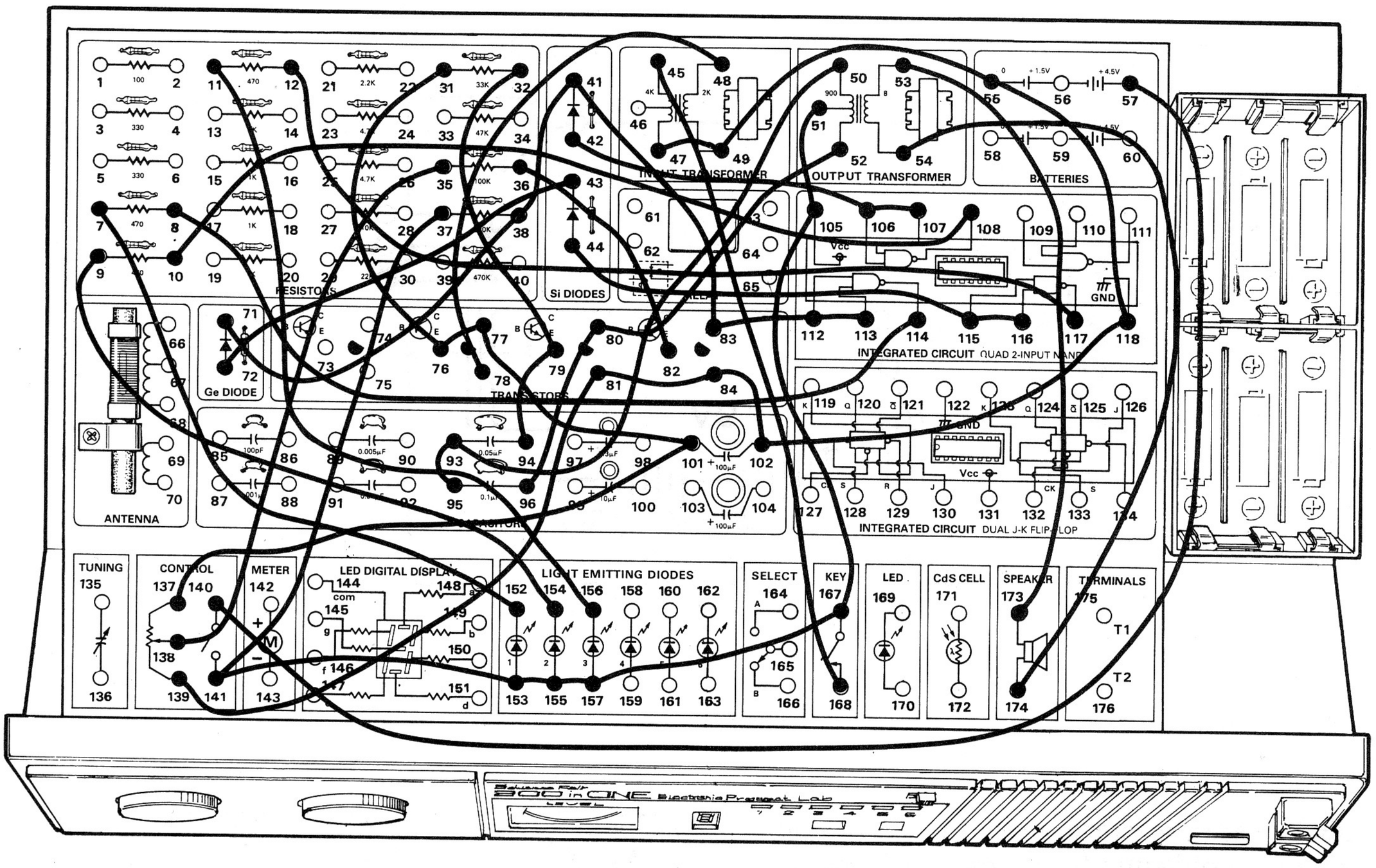

Here's a circuit that is almost the opposite of Project 20 – it's a game to see how many LEDs you can turn **off** by pressing the Key.

When you turn the Control Knob to ON, you'll see LEDs 1, 2 and 3 all light. Press the Key a few times... you'll hear a sound from the Speaker. Keep pressing the Key. First LED 1 will go off, followed by LED 2. We'll warn you – LED 3 is **very** difficult to turn out. You can challenge your friends to see who can turn out all LEDs in as short a time as possible.

If you find it difficult to extinguish even one LED, trying moving the Control knob slightly clockwise.

You'll notice that this Project uses the Quad 2-Input NAND Integrated Circuit. NAND Integrated Circuits have something called "gates" in them. What do you suppose these "gates" let in? (*Hint: it's not the postman!*) Make a note of your thoughts, because later we'll find all about these "gates" and NANDs (plus some other things like ANDs, ORs, NORs ... but no MAYBEs!).

NOTES

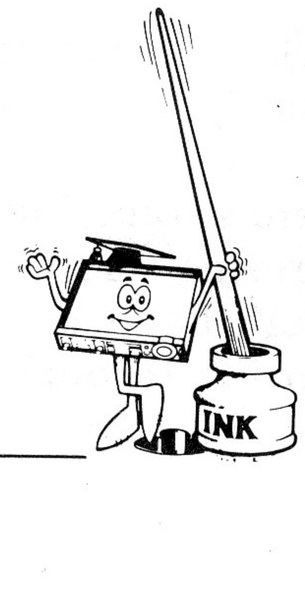

Wiring Sequence

7-152, 8-114, 9-154, 10-108, 11-156, 12-117, 31-76-77-101-137, 32-79-94, 35-138, 36-82, 37-141-153-155-157-167-105-51, 42-106-107, 43-72, 44-115-116, 45-168, 48-78, 47-49-55-118-102-84-81-139, 50-93-95, 52-80-96, 53-173, 54-174, 57-140, 71-38-41-83-112-113.

There's A BIG Change Coming...

in the rest of this Manual. Up to now, you've had a drawing of your Kit's Parts Board to guide you in making wiring connections. But the rest of the Projects in this Manual will have a **schematic diagram** instead.

A schematic diagram is a "road map" for electronic circuits. It shows how different parts are connected together and lets you follow the flow of electricity through the circuit. Highly skilled electronics technicans and engineers are able to build entire circuits with nothing more than just a schematic diagram to guide them!

We won't ask you to build circuits just from schematic diagrams alone (*did we just hear a big sigh of relief?*). To aid you, on the schematics we've added the number of the terminal where each wiring connection is made. A line between 32 and 64 on the schematic means to connect a wire between those two terminals on your Kit's Parts Board. Each part in your Kit has its own schematic symbol. You'll find a picture of each part, along with its schematic symbol and a brief description, at the beginning of this Manual.

You'll notice on the schematics that some lines cross each other and there's a dot at the point where they cross. This means that the two wires represented by the lines are connected together at the point indicated by the dot (and you'll usually find a terminal number beside the dot). If two lines cross without a dot, that's your clue that the wires aren't connected (you also won't see a terminal number near where they cross).

Lines Are Connected

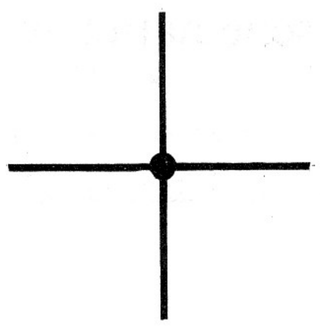

Means wires connect at this point

Lines **Not** Connected

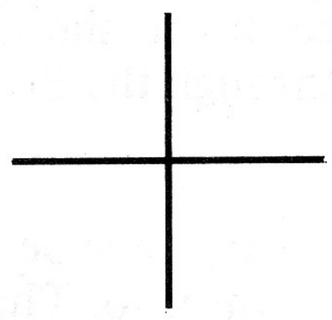

Means wires **do not** connect at this point

At first, schematic diagrams may **look** hard — but they're actually quite simple once you get some practice with them! Don't get discouraged if you get confused by them at first (that's normal). Before long you'll be able to build a circuit just by looking at its schematic diagram (*trust us!*).

The ability to read schematic diagrams is important in electronics. Many interesting circuits in electronics magazines and books are given only in schematic form. A schematic is also a shorter and more accurate way to give a circuit than a written description.

24. LIGHT TELEGRAPH

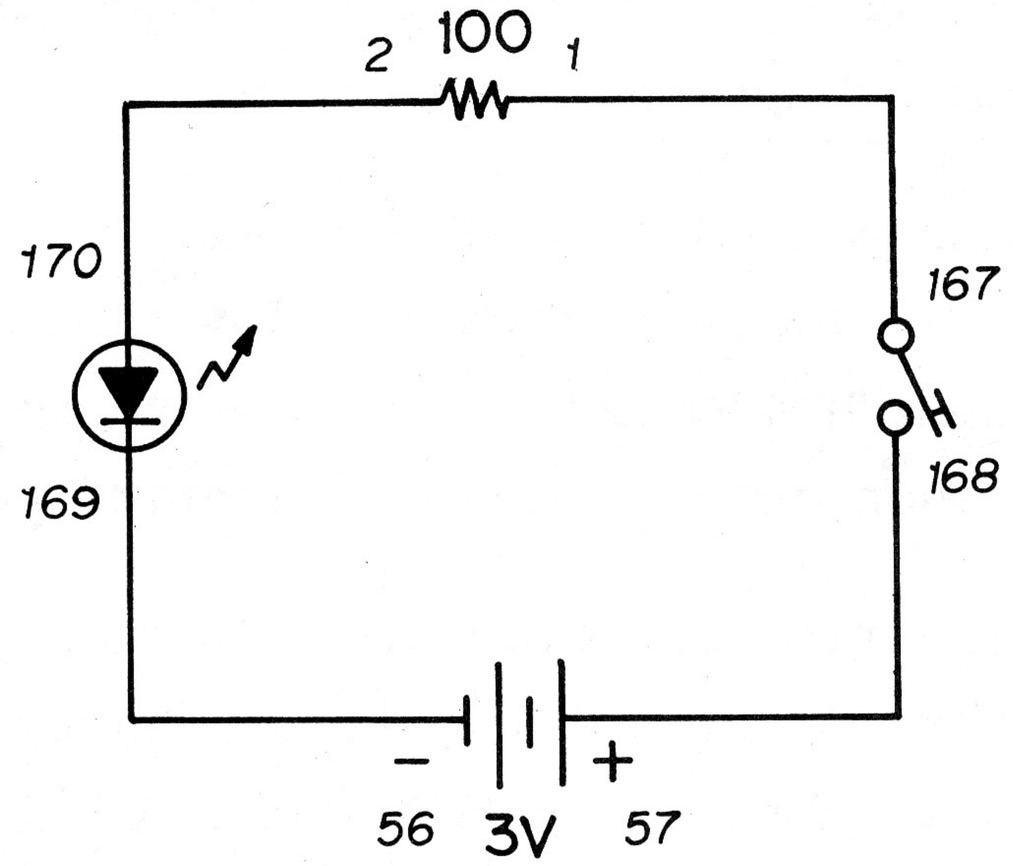

We'll start out with simple circuits so you can get used to building projects just by using schematics. Notice that we've put the wiring sequence for this Project (and the next) upside down .....
aren't we sneaky? Try to get this Project working just using the schematic (before checking the wiring sequence).

When you press the Key, the LED lights. That's simple enough, but it points out a couple of interesting things. Notice how the Key is shown – it is in its "up" position. The circuit does not operate with the Key "up" since there is a gap over which electricity cannot flow. This is called an open circuit. When the Key is pressed down, the gap is closed and electricity can flow through the Project. This is called a closed circuit.

Sometimes electricity can accidentally flow through a path we don't want it to. This is called a short circuit or a "short."

You'll also notice that the schematic symbol for the Batteries has a + and – on either side. The + side stands for "positive" and the – side for "negative." Years ago scientists believed that electricity flows from positive to negative. Today we know the opposite is actually true – electricity flows from negative to positive.

You can trace the flow of electricity in a circuit by looking at the schematic. In this Project, you can see electricity flowed from the negative side of the Batteries through the LED. It then goes through the Key and back to the Batteries at the positive side.

Oh yes – did you ever figure out the difference between "voltage" and current?" Current is the flow of electricity itself. Voltage is the pressure that makes current flow. Voltage is like the pressure that makes water squirt from a garden hose - except it makes electricity flow through a wire!

See what you just did? You built a circuit and traced it from a schematic! *Now that wasn't so bad, was it?*

NOTES

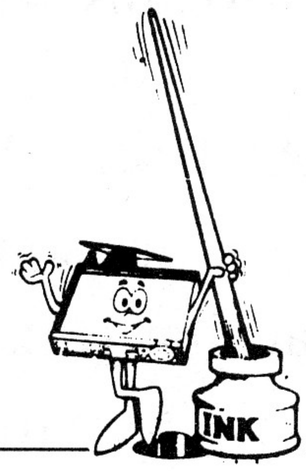

Wiring Sequence

1-167, 2-170, 56-169, 57-168.

25. FRONTIER TELEGRAPH

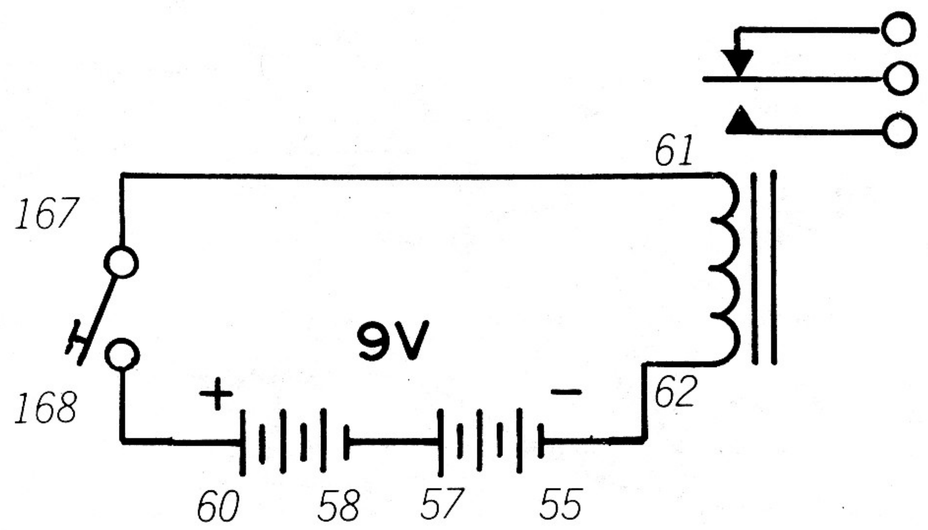

You've probably seen western movies or television programs where an old-time telegraph was in use... the kind where the operator translated the clicks it made into dots and dashes. This Project uses a more modern circuit, but the principle is still the same as it was in the days of the Wild West.

When you press the Key, you'll hear a "click." Look carefully at the schematic... you'll notice the electricity flows from the negative side of the Batteries through the Relay. See the curved lines in the schematic symbol for the Relay? Those curved lines represent a coil of wire inside the Relay.

Something fascinating happens when electricity flows through a coil of wire – the coil becomes magnetic. The coil can attract steel and iron just like an ordinary magnet. As soon as the electricity stops flowing through the coil, it loses its magnetism. This is known as **electromagnetism.**

Relays are another type of switch. They let us use one electronic circuit to turn another on or off.

Here's something to think about: if a coil of wire carrying electricity produces a magnetic field, what happens when you have a magnetic field moving through a coil of wire? Be sure to make a note of your answer.

NOTES

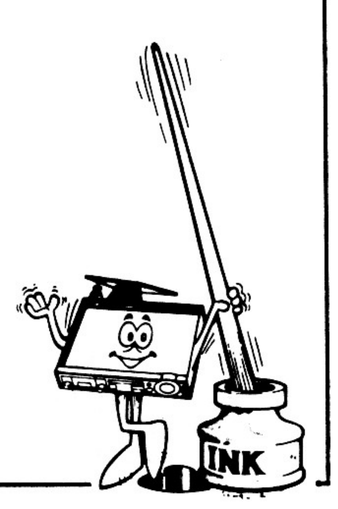

Wiring Sequence

55-62, 57-58, 60-168, 61-167.

26. INTRODUCING THE RESISTOR

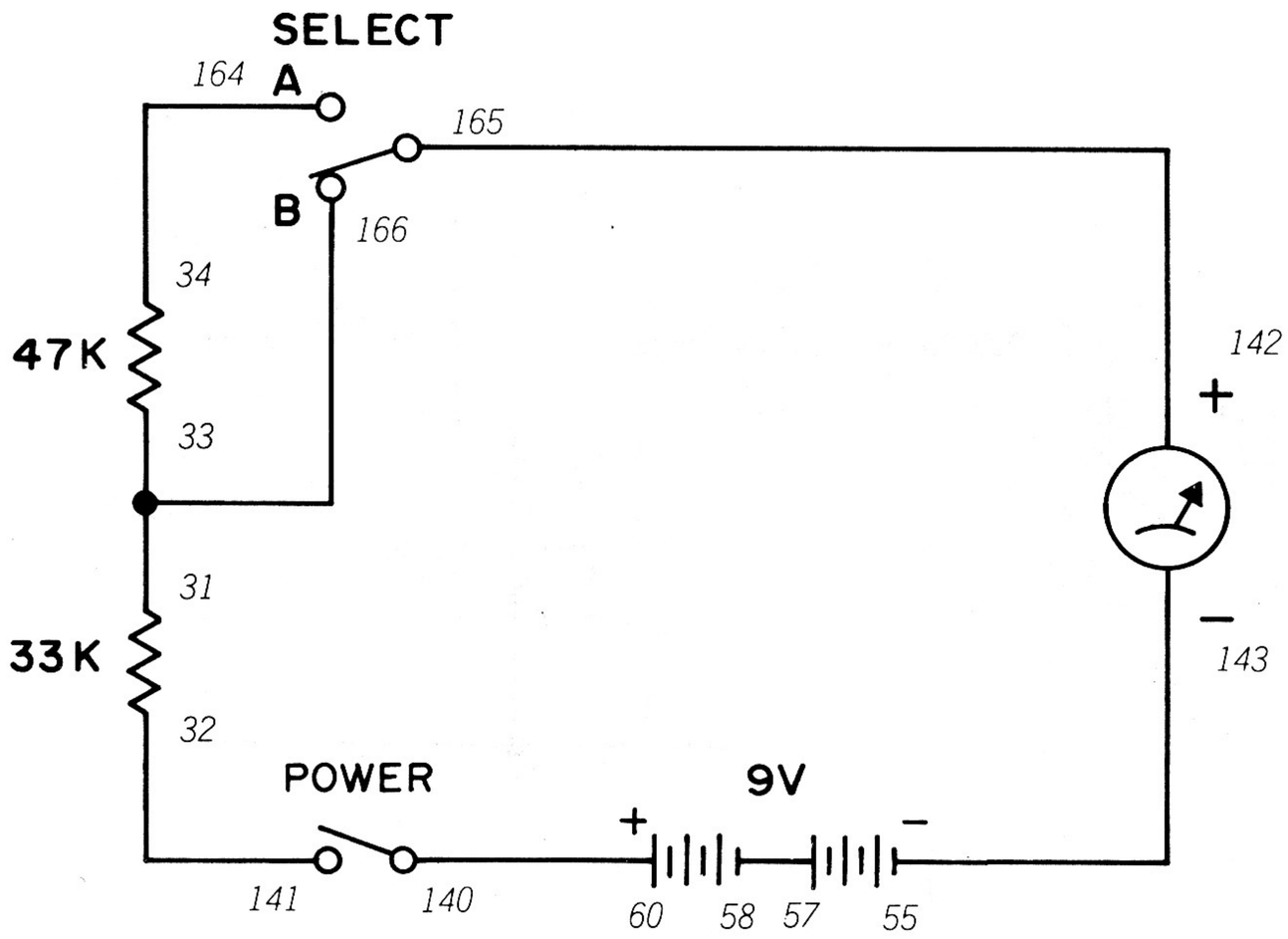

We've been using resistors in almost all of the Projects up to this point. But we've never mentioned exactly what resistors do in a circuit. Here's an experiment to let us find out.

One clue to what resistors do is found in their name – they *resist* (oppose) the flow of electricity. This makes them handy for reducing voltages down to a desired value, for example.

Very often you'll see two or more resistors connected together in different ways in circuits. Notice in the schematic for this Project that the resistors are connected one after another. You can see that the electricity will flow from one resistor to the other. This is called a **series connection.**

Set the Select Switch to B and then set the Control Knob to ON. You'll see the Meter pointer swing very far to the right. Now look carefully at the schematic. What do you think would happen if the Select Switch was set to A? Are you sure of your answer? Okay, then set the Select Switch to A and let's find out!

The Meter doesn't swing as far to the left as it did at B. This is because when resistors are connected in series, the total resistance **increases.** To find the total resistance, all you have to do is add the values of the individual resistors.

Resistors, by the way, are measured in a unit called the **ohm.** Larger resistors are measured in **kilohms,** which is often abbreviated simply as **K.** A kilohm is 1000 ohms. In our schematic, the two resistors are 33K and 47K. In series, they add up to 80K, or 80,000 ohms.

NOTES

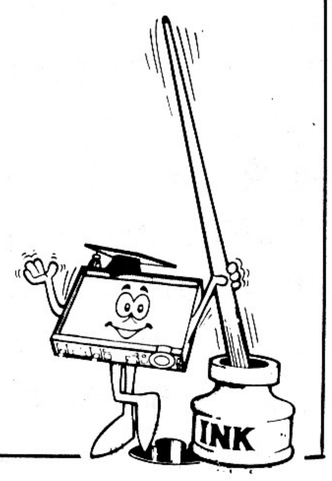

Wiring Sequence

31-33-166, 32-141, 34-164, 55-143, 57-58, 60-140, 142-165.

27. PARALLEL RESISTORS

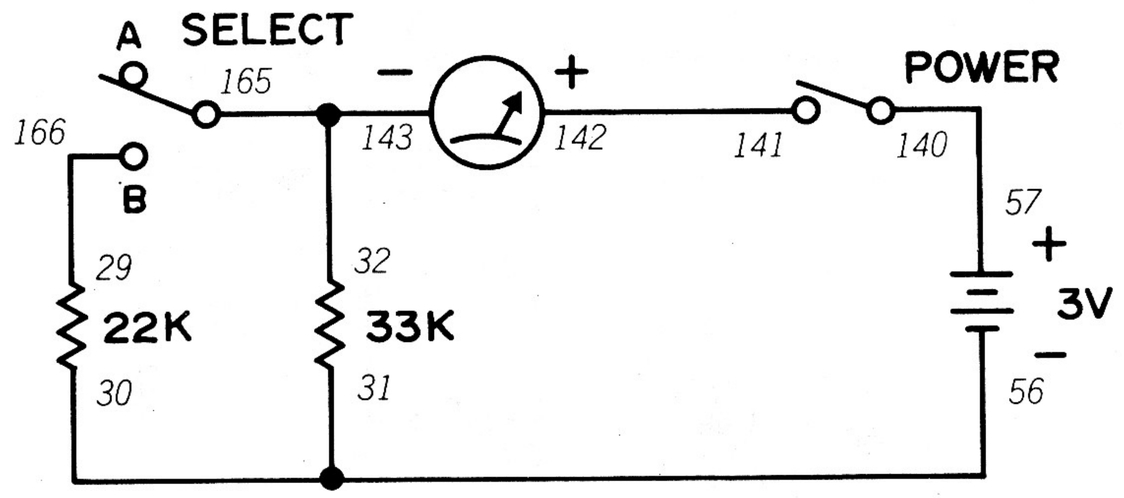

You might think from our last Project that you always increase the resistance in a circuit whenever you add another resistor. Not so – in fact, you can even *decrease* the resistance in a circuit by adding another resistor.

Let's take a look at this Project and see if we can figure out how this happens. In the schematic, you'll notice that the two resistors are side by side, not one after the other. This side by side arrangement is known as **parallel** connection. With the Select Switch at A, only the 33K Resistor is in the circuit. Setting the Select Switch to B adds the 22K Resistor.

Set the Select Switch to A and turn the Control Knob to ON. Note the reading on the Meter. Now set the Select Switch to B – looks what happens to the Meter!

More electricity flowed in the circuit with the extra resistor. Seems impossible, but look at the schematic for this Project. In a parallel arrangement, only a part of the total electric current flows to each resistor. In fact, the total resistance in a parallel circuit is always **less** than the lowest value resistor connected in parallel. In this Project the total resistance would be less than 22K.

As you can see, *parallel resistor connections prove that more is sometimes less!*

NOTES



Wiring Sequence

29-166, 30-31-56, 32-165-143, 57-140, 141-142

28. SECRET RESISTANCE

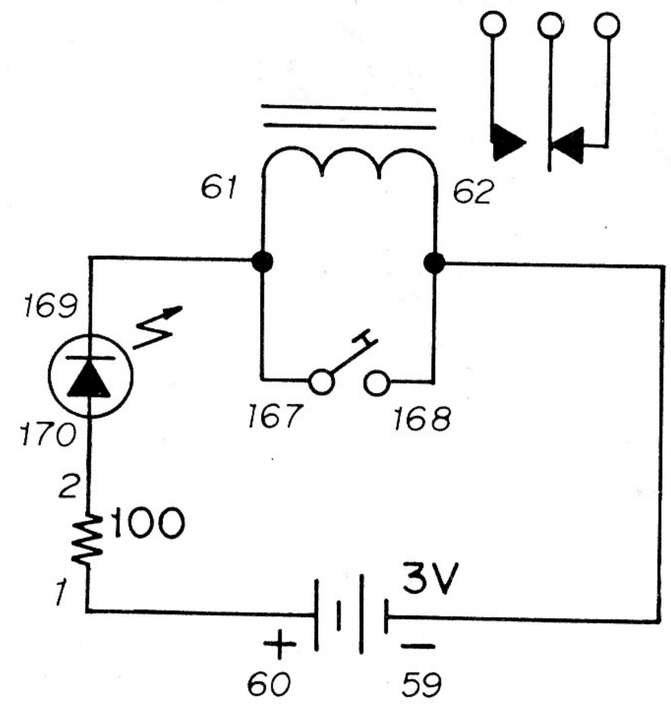

Resistors aren't the only electronic components with resistance... in fact, everything electric current has to flow through has some resistance. Here's a Project that will let you see this "secret resistance" for yourself.

Look at the schematic for this Project. It would seem like the electricity from the batteries would simply flow through the Relay's coil and light the LED. But when you build this Project, you'll notice that the LED will barely light with a dim glow. The only way to get the LED to shine brightly is to press the Key.

This is because the resistance of the wire in the Relay's coil prevents enough current from flowing to the LED. Pressing the Key completes an easier path for the electricity and causes the LED to light.

We sometimes say electronic devices have a loss when connected in a circuit. This means the resistance of the item is high and uses some of the electricity in the circuit. "Lossy" electronic parts often give off heat, since an item with high resistance converts electricity to heat.

(Now that you have that bit of information, how do you suppose an electric stove or heater works?)

NOTES

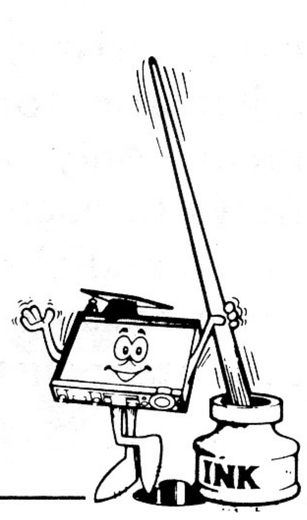

Wiring Sequence

1-60, 2-170, 59-168-62, 61-167-169.

29. A VARIABLE RESISTOR

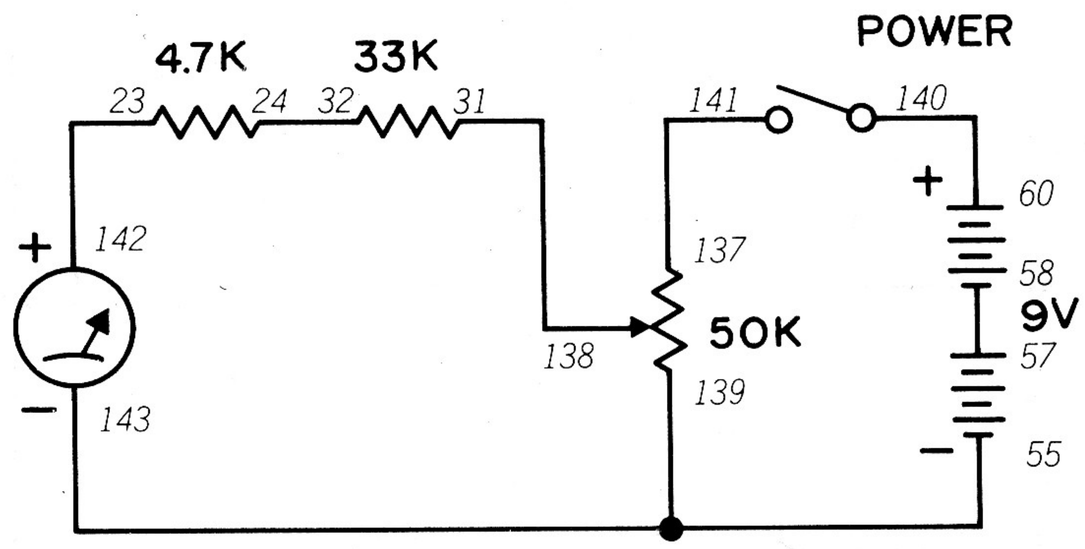

You've been using variable resistors for a long time without being aware of them. The volume control on a radio or television set is a variable resistor, for example. So are the tone controls on a stereo receiver. And we've already used the Control in this Kit in some earlier projects.

In this Project we'll get a good idea of just how the Control in your Kit works.

As you make the wiring connections for this Project, notice the schematic symbol for a variable resistor. The arrow pointing at a resistor gives a good picture of what goes on as you turn the knob of the Control. Only as much resistance as you want is used and is introduced in the circuit at the arrow. The rest of the resistance in the Control is left "unused" as far as the circuit is concerned.

We've already mentioned that when you turn the Control Knob clockwise you'll hear a "click" that lets you know power in the circuit is ON. Continue to rotate the Control Knob. Notice how the Meter swings back and forth? It swings smoothly back and forth as you turn the Control Knob. There's no sudden large jump in the Meter reading. This sort of action is called **linear.** That means if you were to make a graph of the Meter reading and Control position you'd find the graph had a nearly straight line on it (don't believe us? Try it!).



Wiring Sequence

23-142, 24-32, 31-138, 55-139-143, 57-58, 60-140, 137-141.

30. CAPACITORS IN SERIES AND PARALLEL

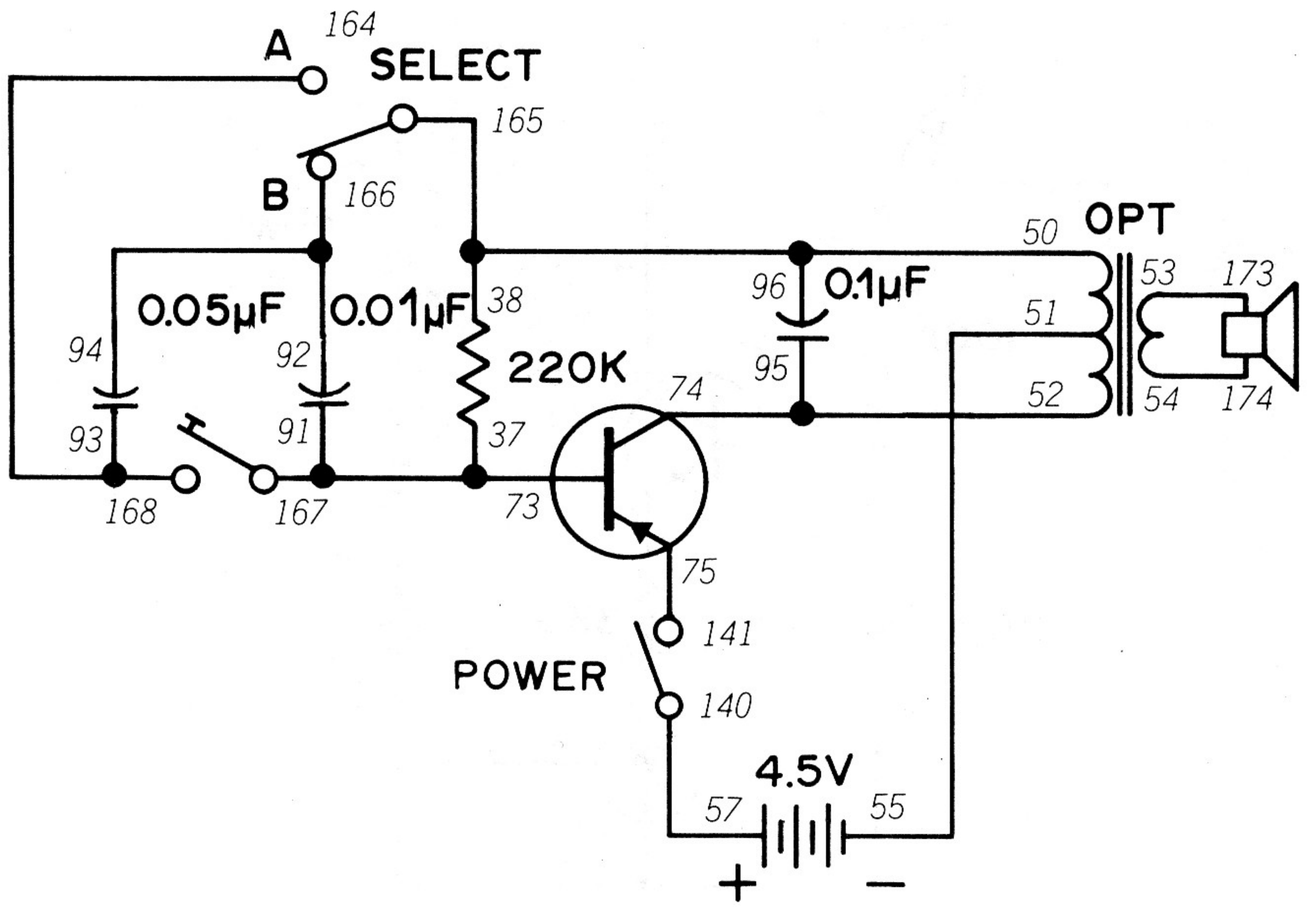

Capacitors might be the handiest items in your Kit. They can store electricity, smooth out pulsing electricity into a steady flow and let alternating current (AC) flow while blocking direct current (DC). This Project will let you **hear** the effects of capacitors in series and parallel.

When you finish wiring this Project, set the Select Switch to B. Next set the Control Knob to ON. You'll hear a sound from the Speaker. In this case electricity is flowing through 0.01 μF capacitor (refer to the schematic while we talk about this). Now press the Key. What happens?

You'll hear a lower-pitched sound from the Speaker. This is because the 0.05μF capacitor has been added in parallel to the first. What do you think happens to the total capacitance when you connect two capacitors in parallel?

You may have guessed wrong. When two capacitors are connected in parallel, the total capacitance **increases**!

Now release the Key 'and set the Select Switch from B to A ... what do you hear? Do not press the Key while Select Switch is set to A (the transistor may be damaged).

You'll hear a high-pitched sound from the Speaker. This is because 0.05 μF and 0.01 μF capacitors are now connected in **series**, and that means the total capacitance in the circuit is now **less** than the smallest capacitor making up the series connection.

You can see now that connecting capacitors in series and parallel has the opposite effect of connecting resistors in the same way. Be careful – it's easy to get confused about which one increases or decreases.

You're probably wondering when we're going to get around to telling you what AC and DC are ... we'll do it sometime, but not now. But why not try to figure it out yourself? Be sure to keep a note of your guess so you can see how close you came...

Wiring Sequence

50-96-38-165, 51-55, 52-95-74, 53-173, 54-174, 57-140, 73-37-91-167, 75-141, 94-92-166, 164-93-168.

31. THE ELECTRONIC GAS TANK

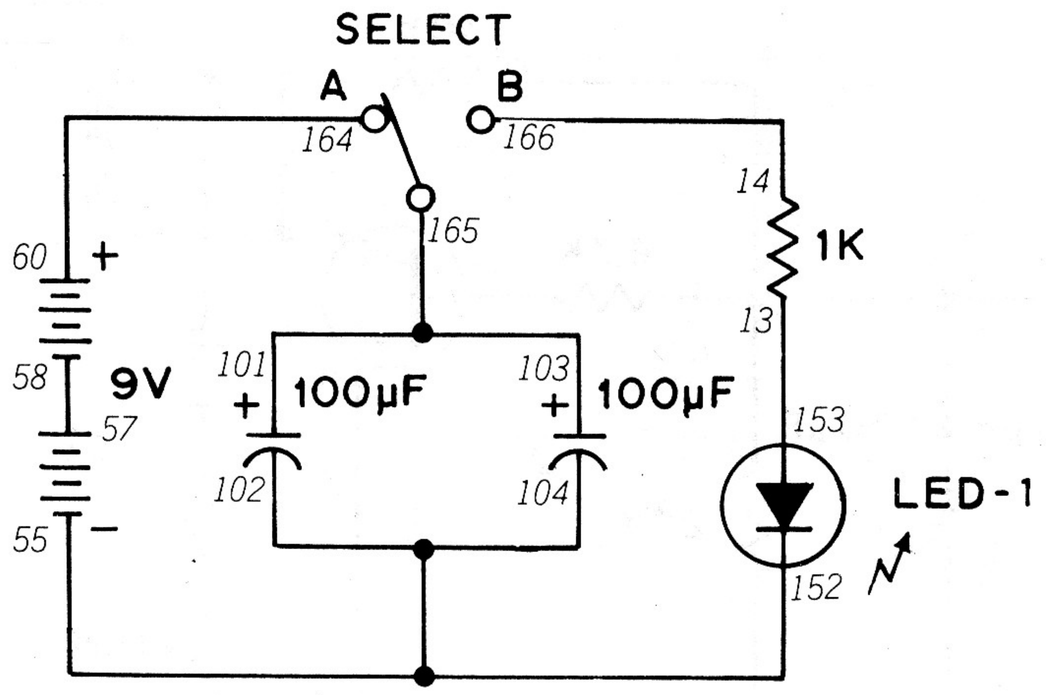

In our last Project, we mentioned that capacitors can store electricity. That means you can think of capacitors as being like the gas tank of a car – you can store electricity in a capacitor and then use it when you need it.

This Project will let you see how these "electronic gas tanks" work. Before you make the final wiring connection, be sure the Select Switch is set to A. Look at the schematic and you can see that in this position current flows from the Batteries through two 100 μF capacitors connected in parallel. Now set the Select Switch to B. What does LED 1 do?

As you saw, LED 1 glows for a few seconds and then goes out. This happens because LED 1 draws electricity from the capacitors until all the charge stored in them is exhausted. To recharge the capacitors, set the Select Switch to A for a few seconds. When you again set the Select Switch to B, LED 1 will again light.

Do you think LED 1 will stay on longer if you let the capacitors charge longer? Try different charging times and try to find out. Do you think there is a limit to how much electricity a capacitor can hold?

We've used "μF" to describe capacitors. That's short for **microfarads. Farads** are the units we use to measure capacitors (like we use ohms for resistors). Farads indicated how much electricity a capacitor can store. But farads are too big for use with electronic circuits, so most capacitors are measured in microfarads (μF), which is one-millionth of a farad, or **picofarads** (pF), which is a **millionth** of a microfarad (*now that's what you call a small charge!*).

NOTES

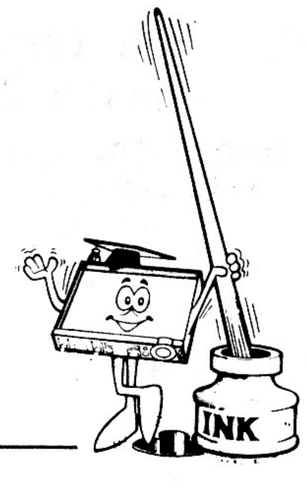

Wiring Sequence

13-153, 14-166; 55-102-104-152, 57-58, 60-164, 101-103-165.

32. CAPACITOR TIMER

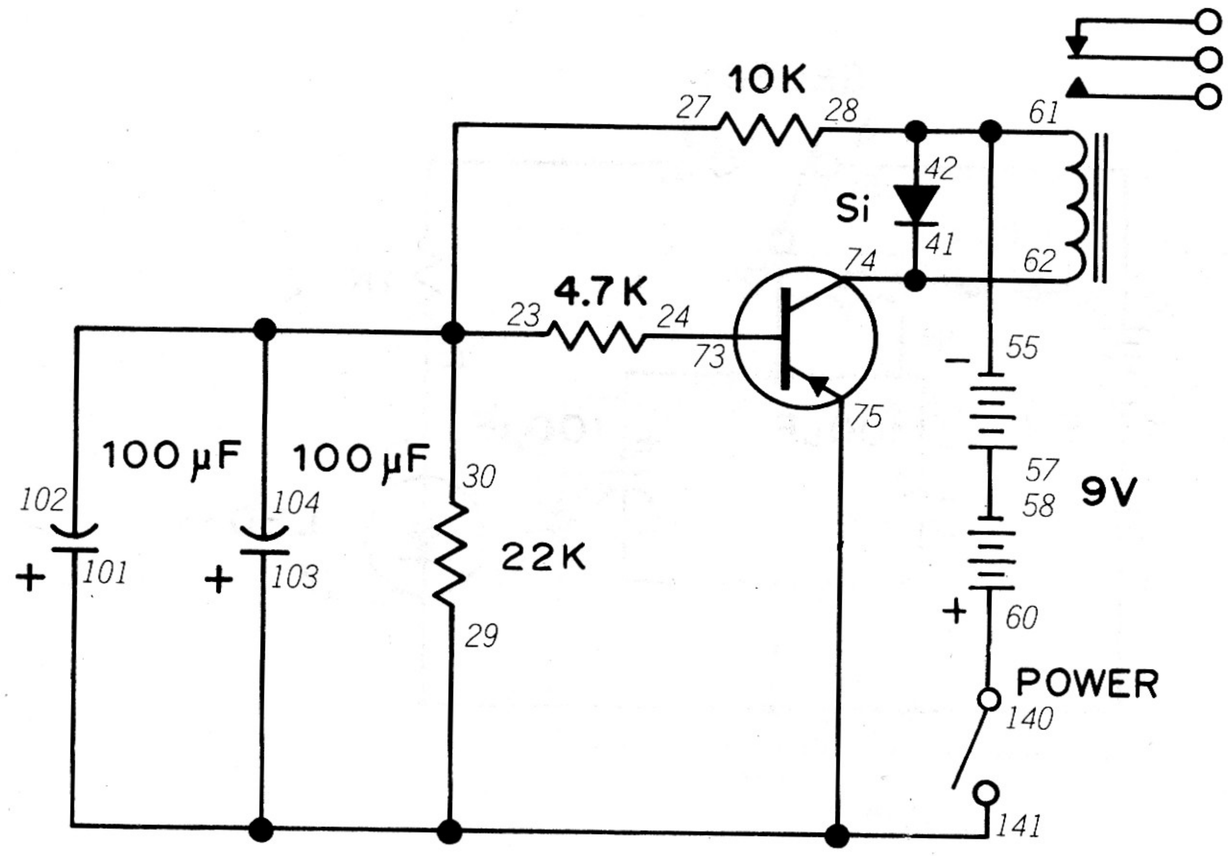

You saw in our last Project how a capacitor can store and discharge electricity. You probably noticed that capacitors take a certain amount of time to charge and discharge. Some of you were probably thinking that this fact could be put to some good use in a timer circuit of some sort – and it happens you're right.

This Project will show how the charging time of a capacitor can control circuit operation. When you finish the wiring connections, set the Control Knob to ON. Listen carefully to the Relay. A few moments after you set the Control Knob to ON, you'll hear a faint "click" from the Relay as it operates. Can you guess why it waited to operate? (*Hint – take a close look at the schematic.*)

The delay happened because of the two 100 µF capacitors in parallel. When they finally built up enough charge, enough current flows to the Transistor to allow the Relay to operate.

Can you think of other circuits or devices that could make use of the time it takes capacitors to charge and discharge?

NOTES

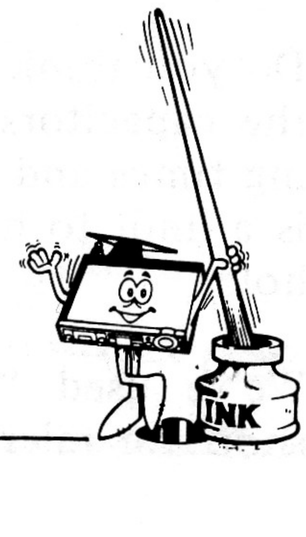

Wiring Sequence

23-27-30-104-102, 24-73, 28-42-61-55, 57-58, 60-140, 62-41-74, 75-141-29-101-103.

33. LIGHT DIMMER

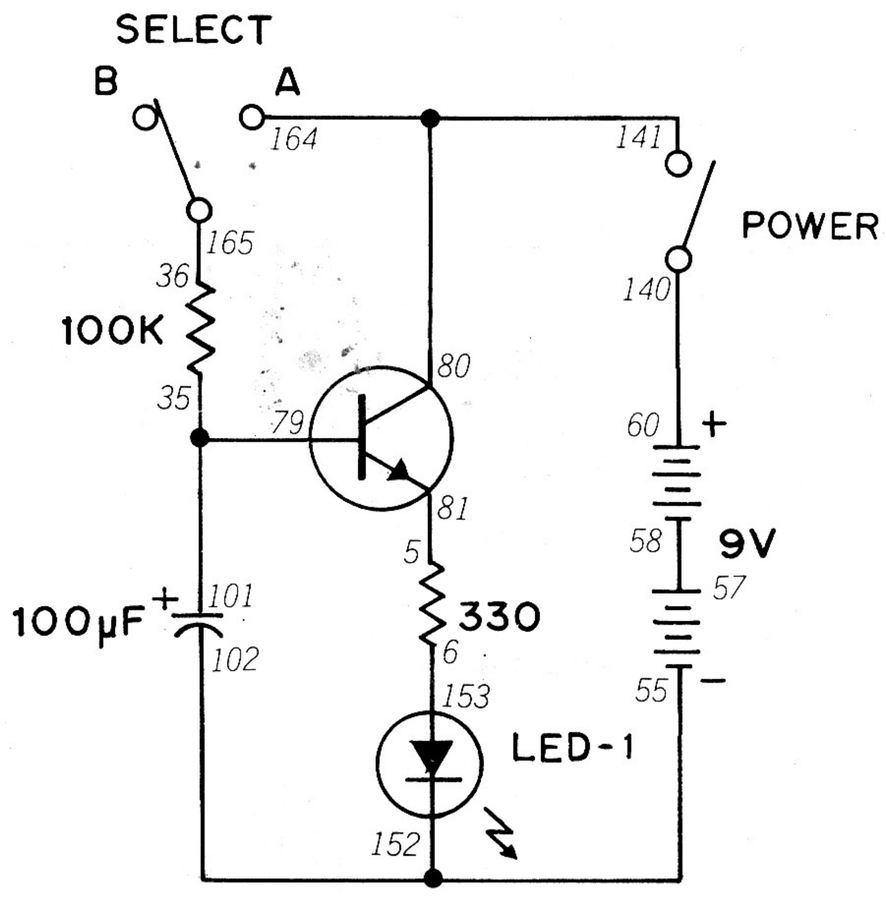

Here's an interesting variation on Project 31 – this time the LED lets you see the effects of capacitor charging and discharging.

When you finish the wiring connections, set the Select Switch to B and then set the Control Knob to ON. Quickly set the Select Switch to A. You'll then see LED 1 slowly begin to light up. After a few moments LED 1 will reach maximum brightness and glow with a steady light. When that happens, set the Select Switch to B. LED 1 will start to gradually fade out, eventually going completely dark.

Take a look at the schematic. Can you figure out how this Project works? Give it your best shot and then turn this Manual upside-down for the answer.

With the Select Switch at A, current flows from the Batteries to charge the 100µF capacitor. As this capacitor builds its charge, it enables the Transistor to operate and light the LED. When the Select Switch is at B, no current from the Batteries can reach the capacitor. It begins to discharge and provides weakening current for the Transistor. Eventually the capacitor will no longer provide enough current for the Transistor and the LED will go out.

See – there was nothing hard about that.

(*Unless, of course, you tried to read it without turning the Manual upside-down!*)

NOTES

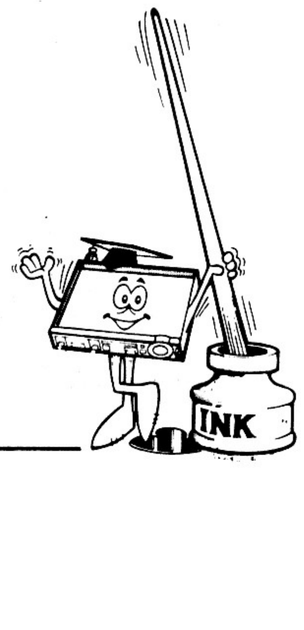

Wiring Sequence

5-81, 6-153, 35-79-101, 36-165, 55-152-102, 57-58, 60-140, 141-80-164.

34. THE QUICK CAPACITOR

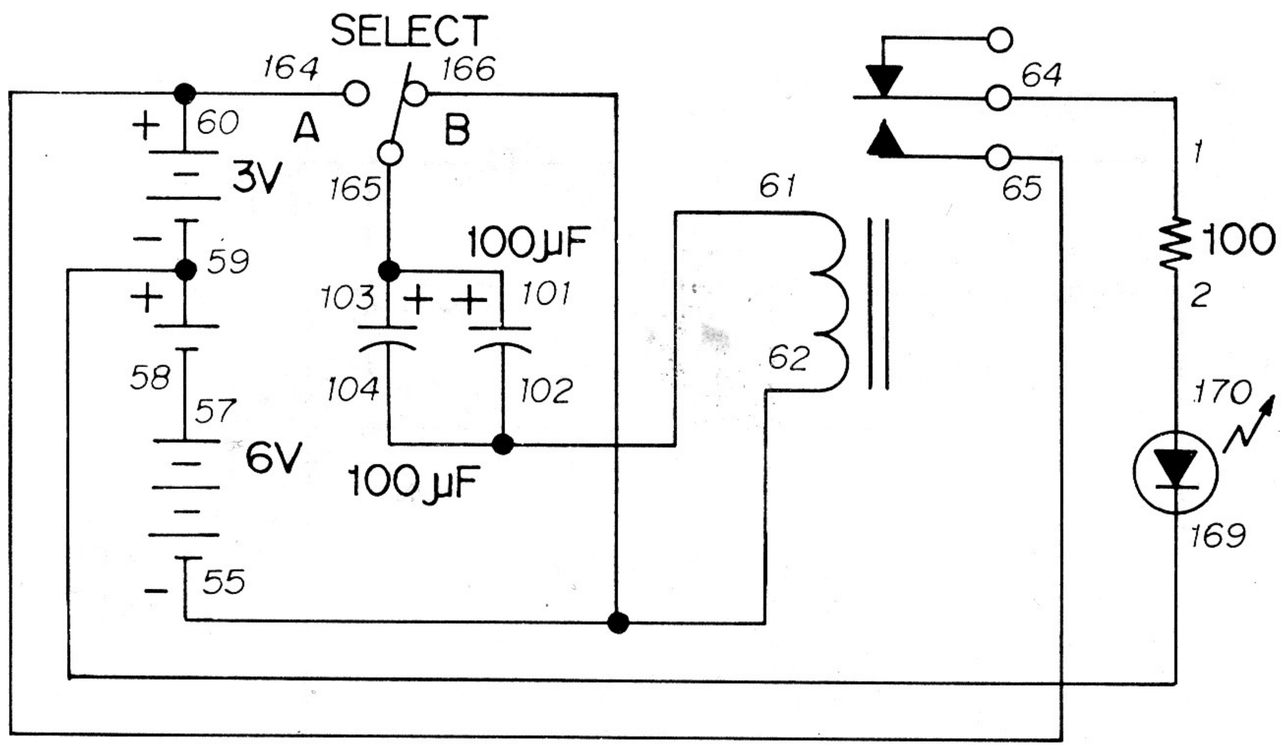

Capacitor charging and discharging rates aren't always as leisurely as those we've seen so far. Sometimes they can be quick as a flash.

This circuit will show you just how fast a capacitor can charge or discharge. It uses two 100 μF capacitors in parallel. (See them on the schematic?). Before starting to build this Project, set the Select Switch to B. When you finish the wiring connections, set the Select Switch to A. The LED will briefly flash when you do this. Now set the Select Switch back to B. The LED will flash again!

You'll notice that the capacitors used in this Project are different from the others in your Kit. These are electrolytic capacitors. They are able to have a large capacitance in a relatively small space. You'll notice on the schematic that these capacitors are indicated by a "+." The + side of an electrolytic capacitor must always be connected in the proper order as shown on the schematic. Other capacitors (resistors too) can be connected in any manner.

This type of circuit has practical uses. For example, you could use it to tell if a switch has been set to another position. Can you think of any other applications for it?

NOTES

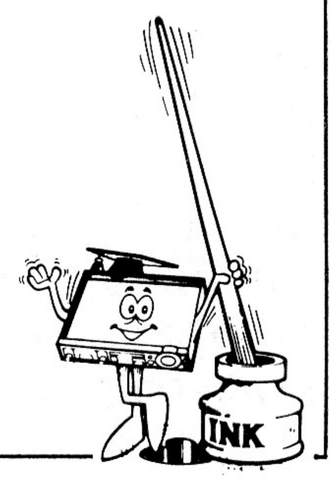

Wiring Sequence

1-64, 2-170, 57-58, 59-169, 61-102-104, 62-55-166, 65-60-164, 101-103-165.

35. ELECTRONIC TIMER

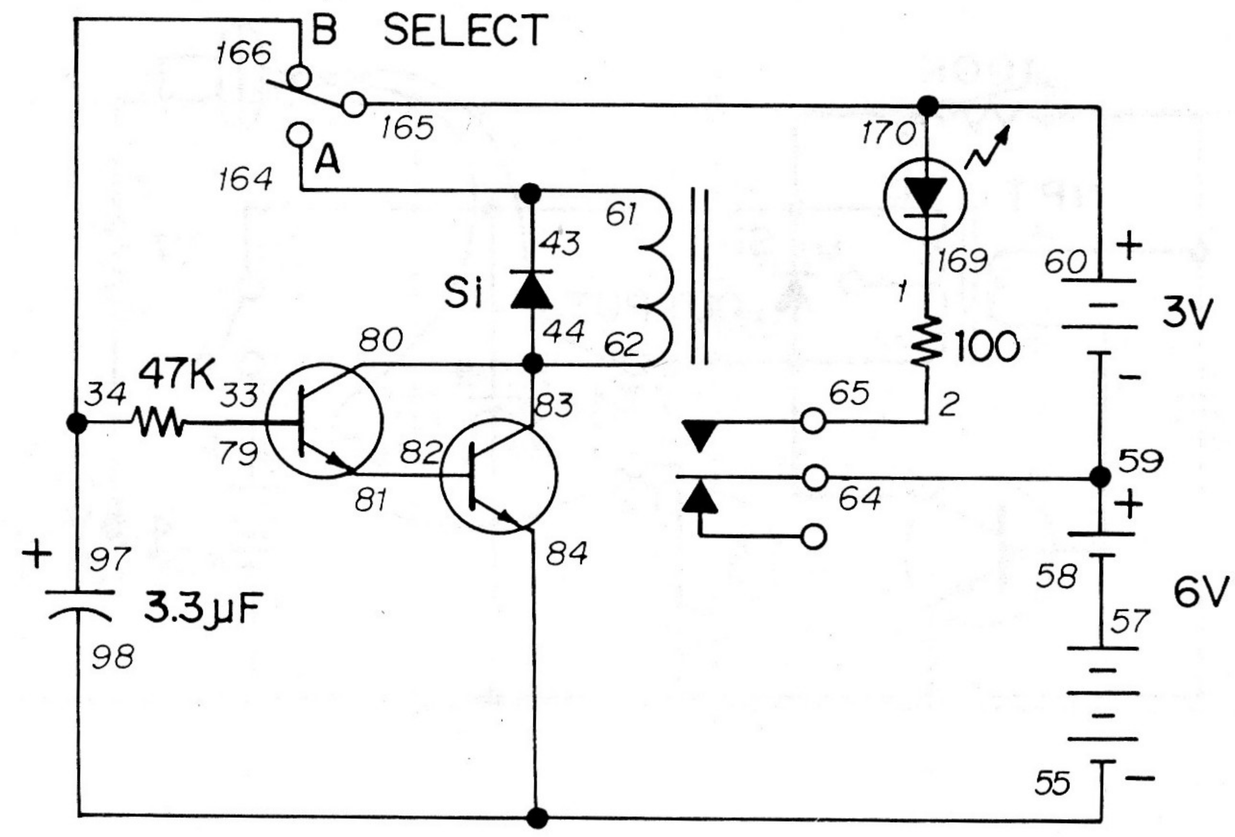

Most of the timing circuits we've built so far using a capacitor's charge or discharge rate have been relatively simple. This is a more complex Project which is more like actual timing circuits used in electronic devices.

Before you finish the wiring, set the Select Switch to B. When you finish the wiring, let the Select Switch remain at B for a few seconds. Then move the Select Switch to A. The LED will come on for a few seconds and then go off. Does it stay on longer if you let the Select Switch remain at B for more than a few seconds? You might want to try replacing the 3.3 uF capacitor with a 100 μF one and see what happens. (Be sure to get the + connection right!). What do you think will happen now?

You might try adding other capacitors in series and parallel and seeing what effect they have on circuit performance. Be sure to keep notes of what happens – do you see any patterns in the results?

NOTES

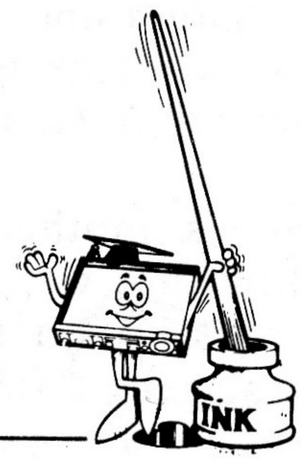

Wiring Sequence

1-169, 2-65, 33-79, 55-84-98, 57-58, 59-64, 60-170-165, 61-43-164, 62-44-83-80, 81-82, 34-97-166.

36. CAPACITORS AND OSCILLATORS

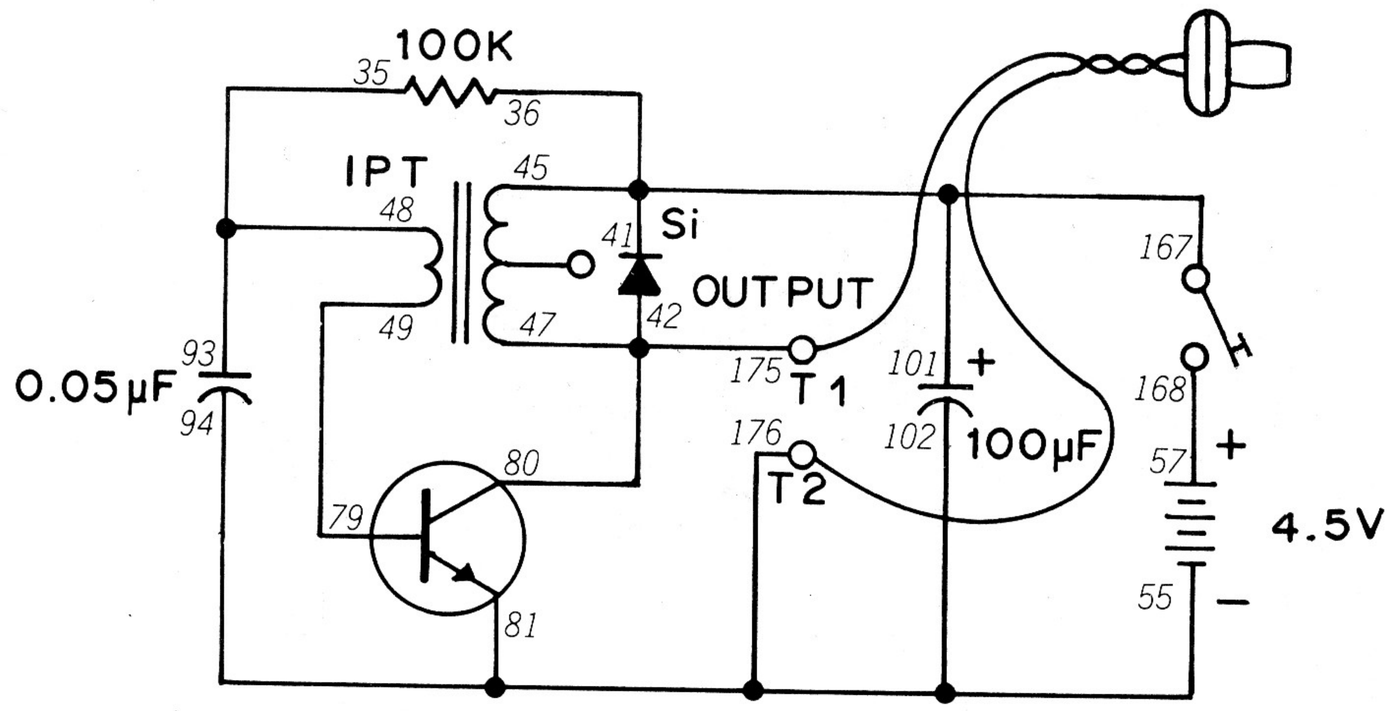

We've used audio oscillators in earlier projects like Earsplitter (Project 5) and Electronic Safecracking (Project 12). Capacitors play an important part in oscillator operation ... as in this Project.

After you finish the wiring connections, connect the Earphone to Terminals 1 and 2 on the front panel of your kit. Press down on the Key. You'll hear a sound through the Earphone. Now release the Key. What do you hear?

You'll still hear the sound even though the Key is not being pressed. But as you continue to listen you'll notice that the frequency of the tone becomes lower. After a few more seconds the tone will stop. Can you guess why this happens? (*Ah, c'mon! By now you've got to know the answer!*)

The 100 μF capacitor is charged when the Key is pressed. When the Key is released, the capacitor discharges and releases enough electricity to keep the oscillator going for a few seconds until it is discharged. (It's really simple, isn't it?)

There's another function capacitors have is oscillators that we haven't yet mentioned. But try this – substitute a 10 μF capacitor for the 100 μF and change the 0.05 μF capacitor to 0.1 μF. What happens to the sound of the oscillator and how long it operates. after the Key is released? Try other values in place of the 0.05 μF capacitor. What happens to the sound? What does this tell you about how capacitors affect oscillator operation? Be sure to keep notes of your results – they'll be handy later when you want oscillator circuits to do certain things.

NOTES

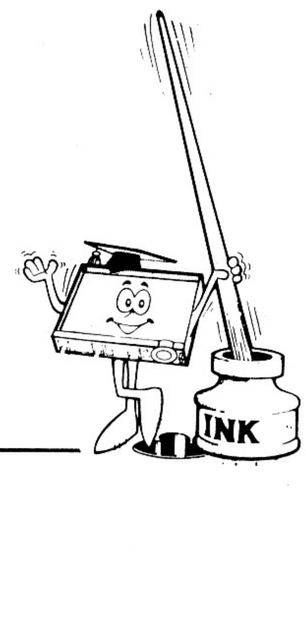

Wiring Sequence

35-93-48, 45-36-41-101-167, 49-79, 55-102-81-94-176, 57-168, 80-47-42-175, T1-EARPHONE-T2.

37. A VARIABLE CAPACITOR

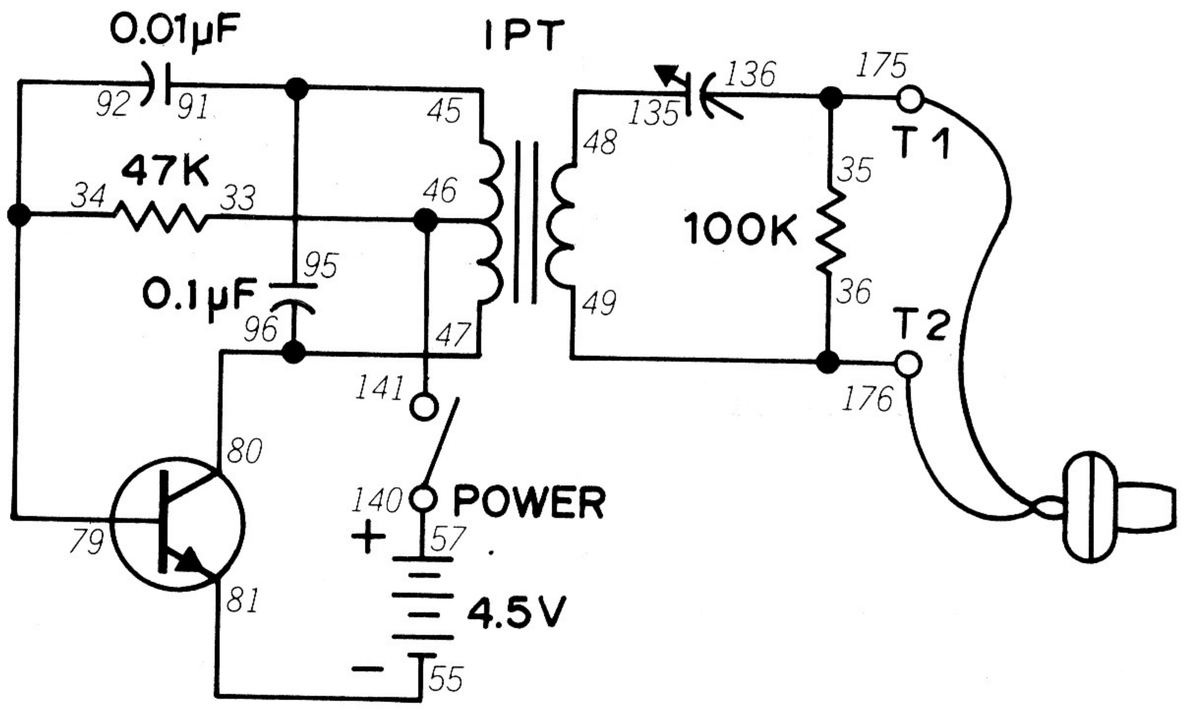

Back in Project 29 we saw how a variable resistor works. Since you've seen how different capacitances can affect circuit operation, you probably suspect that we've included a variable capacitor somewhere in your Kit. You're right – it's the Tuning Control.

This Project will show you how a variable capacitor can affect the operation of an audio oscillator circuit. When you finish the wiring connections, connect the Earphone to Terminals 1 and 2 on the front panel of your kit. Set the Control Knob to ON. You'll hear sound from the Earphone. Now adjust the Tuning Knob – what happens?

You heard the sound change. Look at the schematic for this Project carefully – notice where the variable capacitor is placed in the circuit. What property of the capacitor controls the operation of this circuit?

No, it isn't the ability to store and discharge electricity – it's the ability to let AC pass while blocking DC. AC is current that first flows in one direction and then the other. (Were you able to figure that out by yourself?) This pattern repeats over and over many times a second. DC is current that flows only in one direction. (Remember those notes we asked you to make back in Project 30... how close did you come to the right answer?)

Capacitors can pass AC because they charge and discharge each time the current reverses direction. In DC they simply charge and then accept no more current. It happens that the output of the oscillator circuit has some AC characteristics (although it actually isn't true AC). But it's close enough to AC so that we can Control the sound in the Earphone by adjusting the Tuning Control.

Is the Tuning Control linear like the Control (the variable resistor)? Try the same graphing experiment you did in Project 29 and see.

NOTES

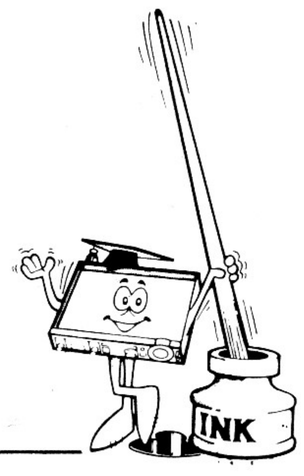

Wiring Sequence

36-49-176, 45-91-95, 46-33-141, 47-80-96, 48-135, 55-81, 57-140, 79-34-92, 136-35-175. T1-EARPHONE-T2.

38. RESISTORS AND CAPACITORS TOGETHER—1

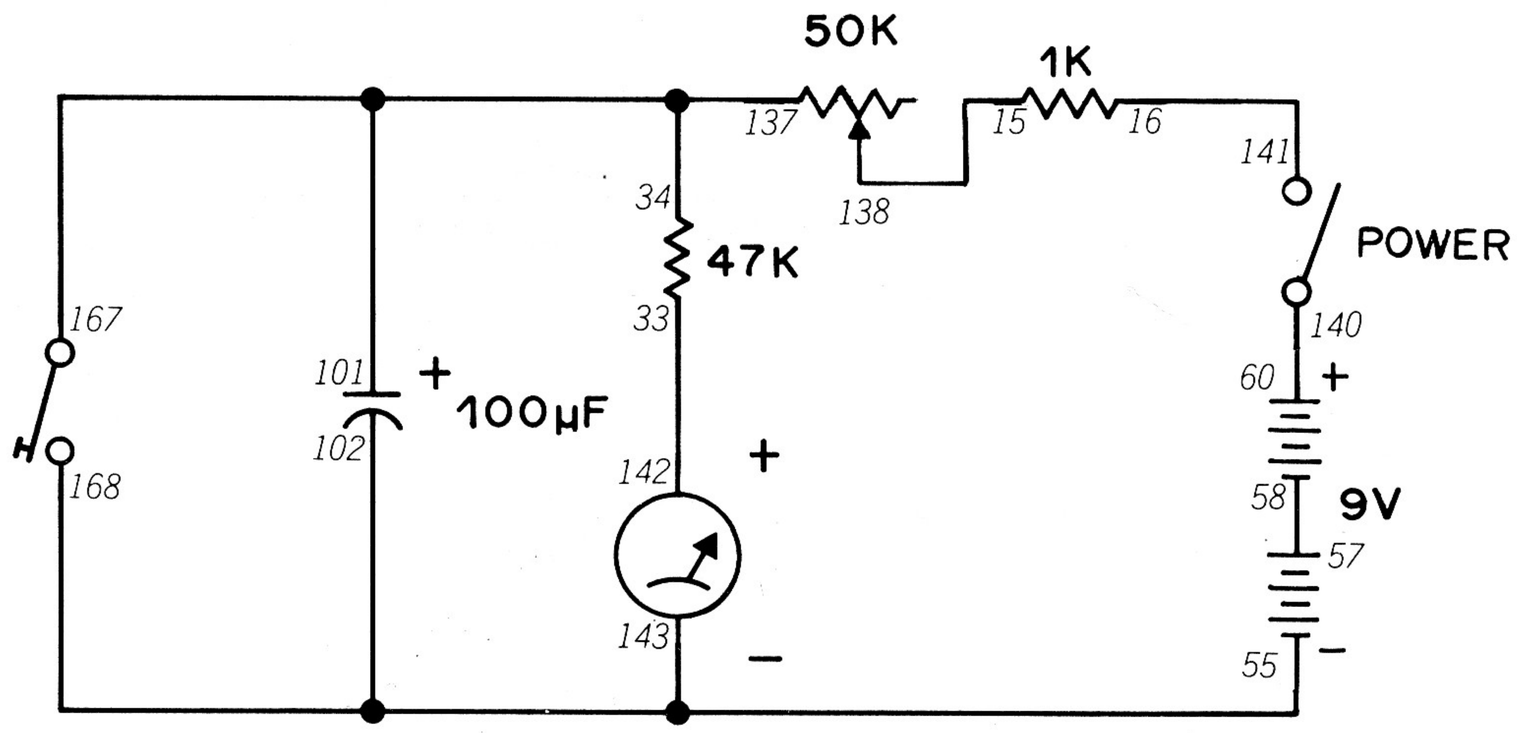

We've explored what resistors and capacitors can do separately. But in most circuits we use them together — *and some interesting things result when we do.*

When you finish the wiring connections, set the Control Knob to ON. You'll notice that the Meter pointer goes all the way over to the right. Press the Key, and the Meter pointer returns to 0. Now release the Key, and you'll notice the Meter pointer returns to the right at a certain speed.

Now press the Key again, but this time try moving the Control Knob when you release it. What happens to the Meter pointer?

The speed at which the Meter pointer moves toward the right changes as you adjust the Control. Can you guess why this happens? (*Hint: remember what a resistor does in a circuit.*)

The Control determines how fast the capacitor charges. When the Control is set for a low resistance, more current reaches the capacitor and it can charge faster. But when the Control is set to a high resistance, only a small amount of current reaches the capacitor and it takes a longer time to fully charge.

Now if a resistor can affect a capacitor's charging time, what else do you suppose it could affect? (Think out your answer carefully... because we're going to find out how right you are in just a few minutes.)

NOTES

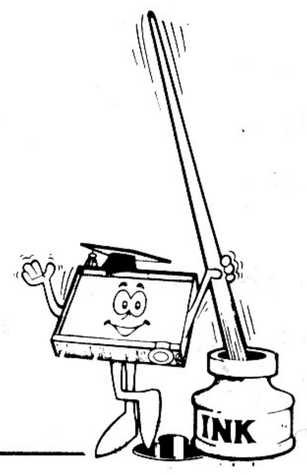

Wiring Sequence

15-138, 16-141, 33-142, 55-143-102-168, 57-58, 60-140, 137-34-101-167.

39. RESISTORS AND CAPACITORS TOGETHER—2

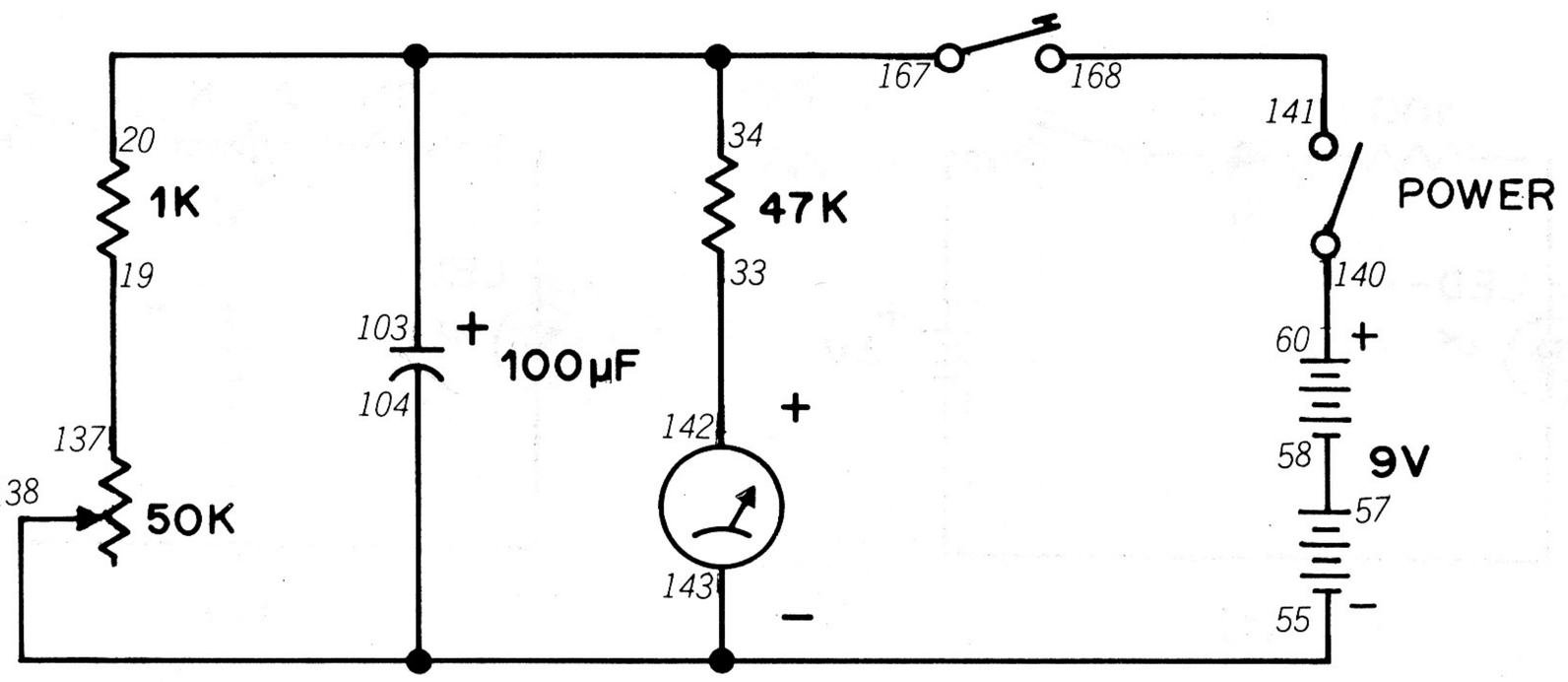

We're now going to find out the answer to that question we raised at the end of the last Project. *(You didn't expect us to let you off the hook, did you?)*

After you complete the wiring connections, turn the Control Knob clockwise to switch power ON. Press the Key and the Meter pointer will swing to the right. Now release the Key and you'll see the Meter pointer return to the left toward 0 at a certain speed. Press and release the Key again but now adjust the Control Knob after releasing the Key. You'll see the Meter pointer return at different speeds as you adjust the Control. Can you figure out what's happening?

The Control is adjusting how fast the capacitor can discharge. If the current from the capacitor meets a high resistance, the capacitor cannot discharge as quickly as it could into a low resistance.

You see now that a resistor can control both the charging and discharging times of a capacitor. Electronics engineers refer to this as the **R-C Time Constant.** This means we can control the operation of several circuits, such as oscillators, by using different values of resistors and capacitors. We'll see several examples of how this is done in future Projects.

NOTES

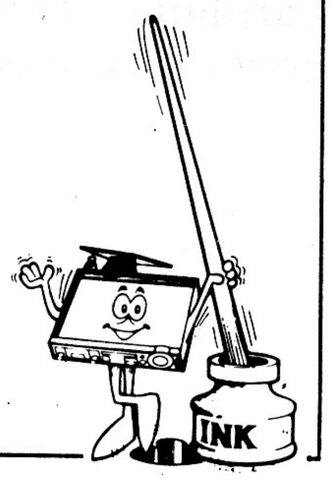

Wiring Sequence

19-137, 20-103-34-167, 33-142, 55-143-138-104, 57-58, 60-140, 141-168.

40. MEET THE DIODE

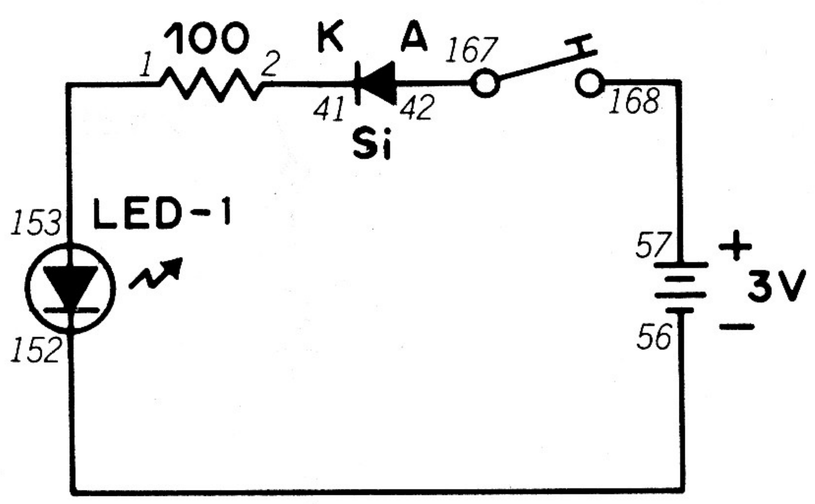

(1)

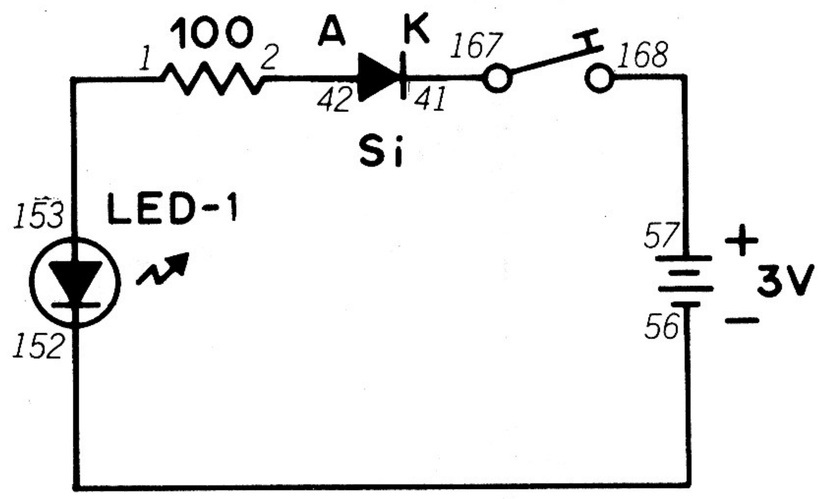

(2)

One electronic device which we'll use in many circuits is the *diode*. A diode has a special advantage over other electronic parts,which we'll see in this Project.

Wire this Project as shown in the first schematic. When you press the Key, LED 1 will light. That means that current is flowing through the diode. Now *reverse* the wiring connections to the diode as shown in the second schematic. Press the Key and see what happens.

Were you disappointed? The LED didn't light up, did it? Can you think of a reason why? (*No fair peeking at the answer.*)

A diode only conducts in one direction. This means it can change AC into a pulsing DC by conducting only one of the directions in which AC flows. Diodes can also be used to change radio signals into electrical energy you can hear with an Earphone. This is called **rectification** and we'll see how this works later.

NOTES

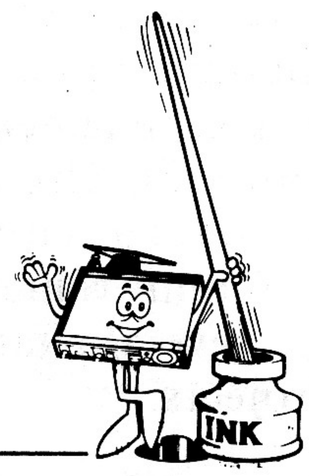

Wiring Sequence

(1) 1-153, 2-41, 42-167, 56-152, 57-168.

(2) 1-153, 2-42, 41-167, 56-152, 57-168.

41. VOLTAGE DROP

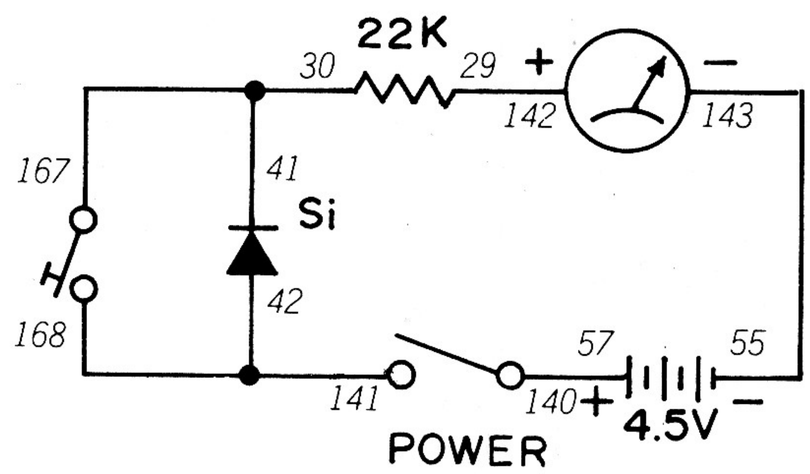

No, a voltage won't break if you drop it... but voltage drops are important in electronics! A voltage drop is how the voltage at a point in a circuit decreases because of the "hidden resistance" we found out about in Project 28.

This Project will show a voltage drop because of a diode. After you complete the wiring, turn the Control Knob clockwise to ON. You'll see the Meter pointer move. Now press the Key – what happens to the Meter? Can you guess why this happens? (Examine the schematic carefully.)

When you press the Key, the Meter gives a higher reading. This is because the Key "shorts out" the Diode. The Diode has a voltage drop which slightly reduces the amount of electricity that reaches the Meter. Releasing the Key puts the Diode back into the circuit, causing the Meter indication to drop.

(Remember that electricity always takes the easiest path in a circuit. When you press the Key, the electricity has an easier path to follow than going through the Diode. The electricity goes through the Key instead of the Diode.)

In this Project the Diode reduces the voltage reaching the Meter from the 4.5 volts supplied by the Batteries to 3.9 volts. We say the Diode has a voltage drop of 0.6 volts. Resistors also have a voltage drop across them too. We often use diodes (or resistors) and their voltage drops to supply a desired voltage to various components in circuits.

NOTES

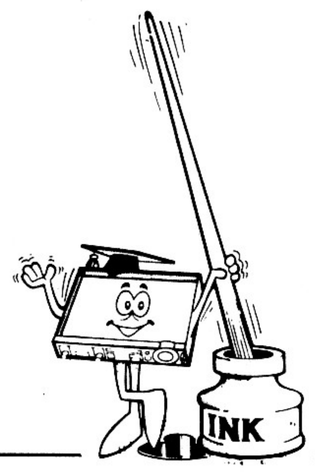

Wiring Sequence

29-142, 30-41-167, 55-143, 57-140, 141-42-168.

42. VOLTAGE REGULATOR

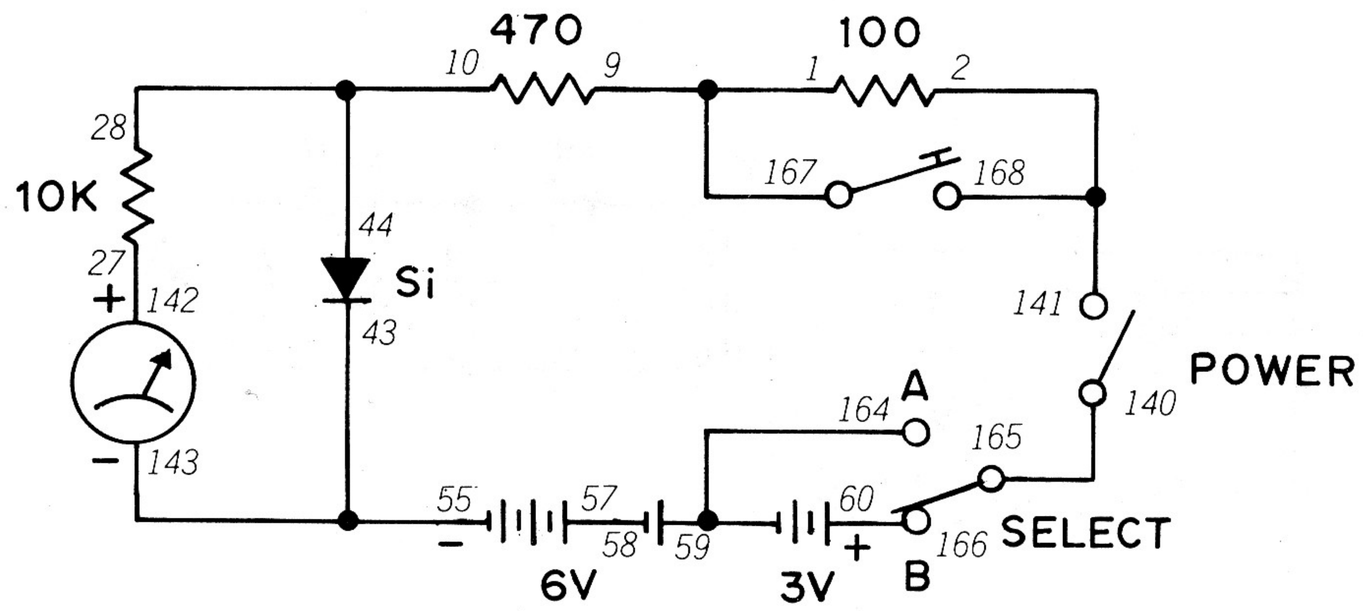

One of the nicest things about a diode is that its voltage drop is fairly constant regardless of how much voltage is applied to it. This makes it ideal for situations where we need to supply part of a circuit with a constant voltage. This Project will show how well a diode does this job.

Take a good look at the schematic for this Project. With the Select Switch at A, the circuit gets 6 volts from the Batteries. When the Select Switch is set to B, 9 volts is supplied from the Batteries. We would expect that the Meter pointer would move further to the right at 9 volts than it does at 6 volts. Let's see how correct we would be in assuming this ...

After building this circuit, set the Select Switch to B and turn the Control Knob clockwise to ON. Notice where the Meter pointer swings to. Now press the Key. This takes the 100 ohm resistor "out" of the circuit (see schematic). We might expect the Meter pointer to move more to the right ... *but nothing much happens.* If the Meter pointer in your Kit moves at all, it will be only a slight movement.

Now set the Select Switch to A. The Batteries are now supplying only 6 volts to the circuit. What happens to the Meter pointer? It may drop, but only very slightly. Try pressing the Key. Again the difference in the position of the Meter pointer will be very slight – if you can notice the difference at all.

All this happens because the Meter is being supplied electricity through the voltage drop of the diode. And this drop holds fairly constant regardless of the voltage from the Batteries.

Of course, voltage regulator circuits are usualy more complicated than this one. A special type of diode, the **Zener** diode, has been developed for use in voltage regulators.

NOTES

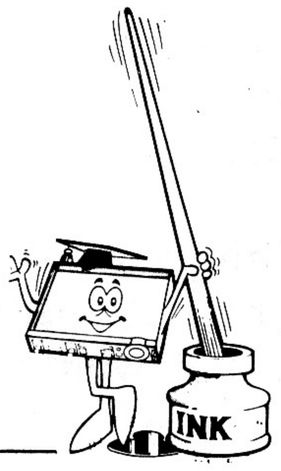

Wiring Sequence

1-9-167, 2-168-141, 10-44-28, 27-142, 55-43-143, 57-58, 59-164, 60-166, 140-165.

43. THE LED—A SPECIAL DIODE

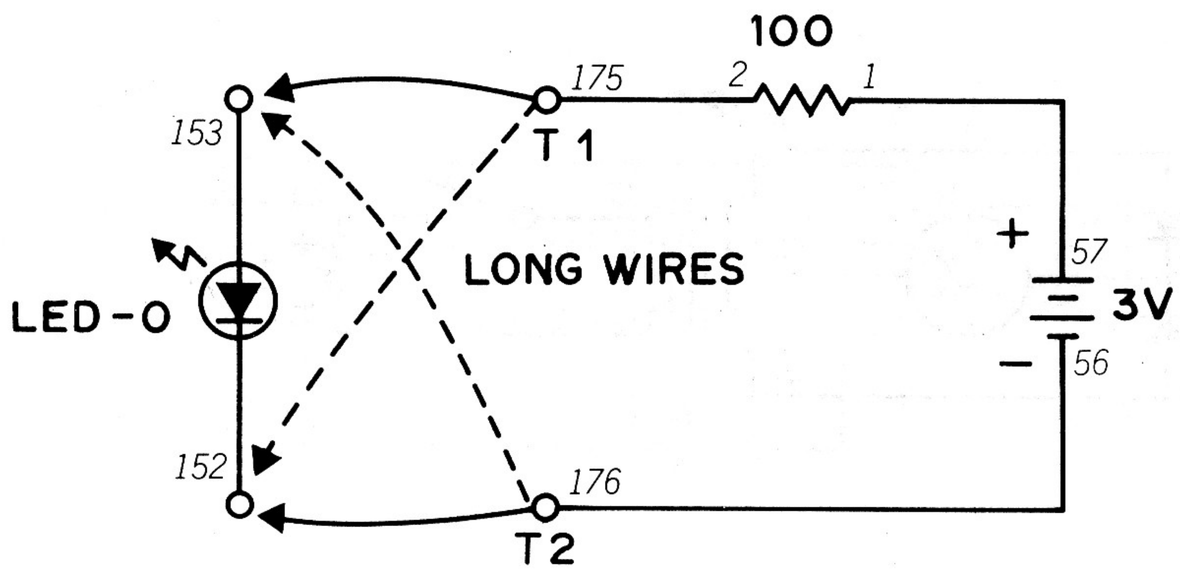

We've used LEDs in a number of earlier circuits. But just what is a LED anyway? "LED" stands for "light emitting diode." It is indeed a diode, but a very special one.

This Project will show just how a LED works. Take the two long wires from Terminals 1 and 2 on the front panel of your Kit, and touch terminals 152 and 153 with them. When do you make LED 1 light?

When the long wire from Terminal 1 is touching terminal 153 and the long wire from Terminal 2 is touching 152, LED 1 will light up. Remember when we said that a diode can conduct only in one direction? *When a LED is conducting, it gives off light.* When electricity is applied from the opposite direction, it won't conduct nor does it give off light.

Each diode has two parts inside: an **anode** and a **cathode.** In the schematic, the anode is the "arrow" while the cathode is the straight line within the diode symbol. Electricity flows from the cathode to anode. This is called **forward bias** by electronics engineers. When electricity is applied in the opposite direction (and the diode won't work), this is called **reverse bias.**

Be careful and don't apply too much reverse bias to a diode – it could be damaged. That's why you'll notice we always add a resistor in series with a LED. LEDs are widely used in electronic circuits in place of lamps because they use little current and don't burn out like lamps do.

NOTES

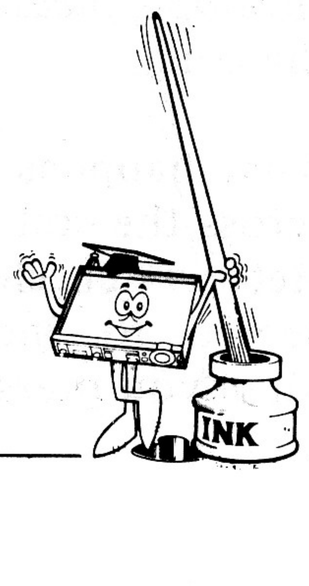

Wiring Sequence

1-57, 2-175, 56-176, T1-LONG WIRE, T2-LONG WIRE.

44. HOW A TRANSFORMER WORKS

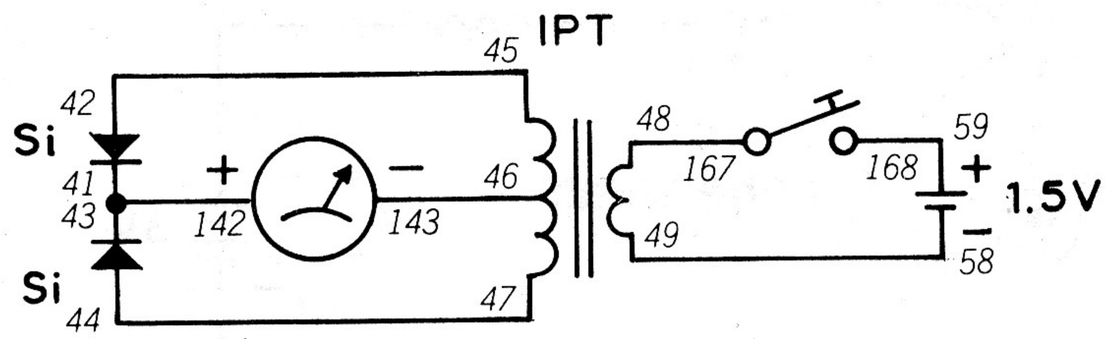

You probably heard of a transformer long before you started playing with this Kit. It's a common and important part in circuits, but what does it do? This Project will let you find out.

After you make all the wiring connections, press the Key while watching the Meter carefully. Hold down the Key after you press it. What did the Meter do? Now release the Key. What does the Meter do now? Can you explain why all this happened? (Here's a clue: look carefully at the schematic symbol for a transformer. It looks like two coils of wire side by side. Now try to remember what we said about coils of wire carrying electricity back in Project 25...)

Give up? (*Aw c'mon, it's not that hard!*) We found out back in Project 25 that a coil of wire carrying electricity sets up a magnetic field. We also asked you to guess what happens when a magnetic field moves across a coil of wire. The answer is (*the envelope please, judges!*) that electricity flows in the coil.

What happens here is that a magnetic field moves across the coil of the transformer connected to the Meter when electricity flows through the coil connected to the Batteries. (The electricity flows when you press the Key.)

You might wonder why the Meter pointer doesn't stay swung to the right all the time when you hold the Key down. This is because the magnetic field must be moving, and it only moves when you press or release the Key. When you hold the Key down, the magnetic field is steady — and no electricity flows is the other coil.

Transformers are very useful in AC circuits because the magnetic field moves whenever the current changes direction. It can also be used in DC circuits if we "interrupt" the DC or vary the voltage so that we cause the magnetic field to move.

Transformers are used to change one voltage to another. They're also used to "match" circuits — help different circuits to "get along" with each other. We'll see more of how transformers are used in future projects.

Wiring Sequence

41-43-142, 42-45, 44-47, 46-143, 48-167, 49-58, 59-168.

45. A CHOPPER CIRCUIT

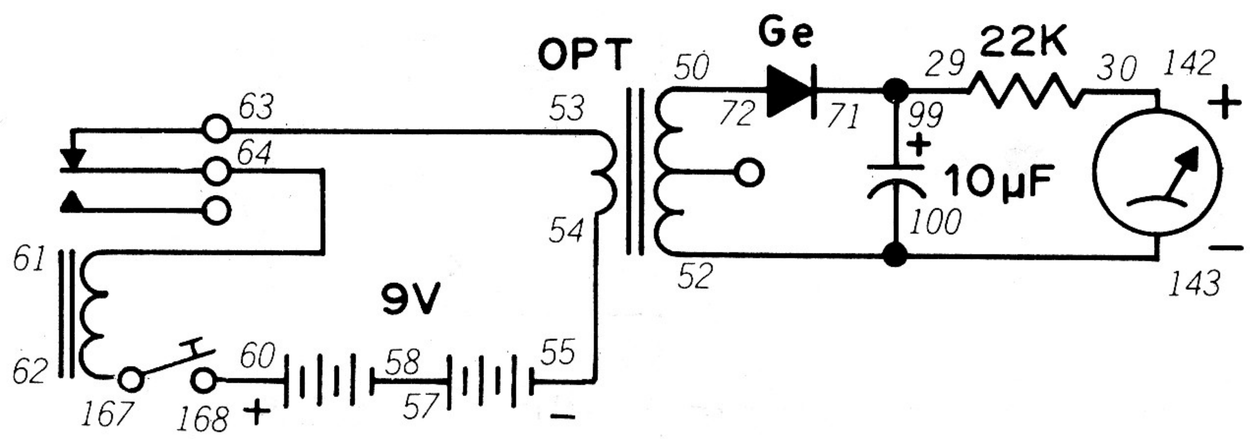

In our last Project we mentioned that transformers can be used in DC circuits if the current is "interrupted." This is a circuit that does just that – only we say it "chops" DC instead of interrupting it.

When you finish wiring this Project, press the Key. You'll hear a "beeping" sound and the Meter pointer will swing. Can you tell what's happening just by looking at the schematic?

Here's the scoop: when you press the Key, electricity flows through the Transformer and Relay. But when current flows through the Relay, it turns the circuit off. When this happens, the spring action of the Relay closes the contacts again, completing the circuit once more (and it repeats all over again). The DC is "chopped" by the Relay. When you press the Key again, you repeat this action.

As the DC is chopped, it sets up a moving magnetic field in one coil of the Transformer. This moving magnetic field in turn causes electricity to flow in the Transformer coil connected to the Meter.

This type of circuit can be used with DC circuits where transformers are used. It's not likely we would want to use it with AC circuits – do you know why? (*No fair peeking at the answer.*)

Since the magnetic fields set up by AC would change every time the current changed direction, we wouldn't need any mechanical means of chopping the current.

NOTES

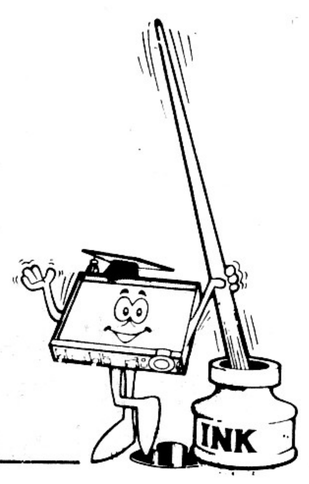

Wiring Sequence

30-142, 50-72, 52-100-143, 53-63, 54-55, 57-58, 60-168, 61-64, 62-167, 71-29-99.

46. AN AC SIMULATOR

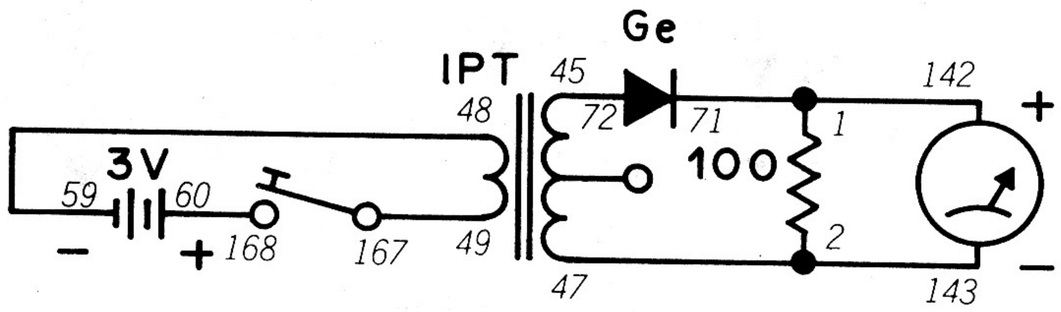

You've probably already noticed that there's no direct electrical connection between the two coils of a transformer. You're probably curious how you can get a steady electric current out of a transformer. This Project will show you how.

When you finish wiring, push the Key once. You'll see the Meter pointer swing to the right. Now start pressing the Key over and over. You'll notice the Meter pointer moves further to the right and doesn't fall back quite as far when you release the Key.

Now press the Key as fast as you possibly can. Can you make the Meter pointer stay all the way over to the right? Probably not – but you noticed that the Meter pointer didn't swing over quite as wide a range as it did when you pressed the Key slowly.

The AC used in the power lines of a building reverses direction 120 times per second. That's the same as pressing the Key in this Project 120 times each second. The magnetic fields in a transformer connected to an AC line change so rapidly that there's almost no noticeable "chopping" or interruption in the electricity at the transformer's output.

(And here's a excercise for your brain: if you put AC into a transformer, will the output be AC or DC ? Don't peek at the answer.)

The output will be AC. Why else do you think we include a diode with these Projects involving transformers? The diode takes AC from the Transformer and rectifies into DC for the Meter.

NOTES

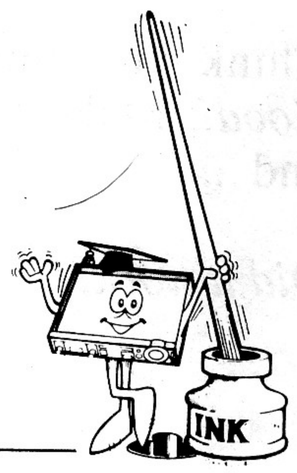

Wiring Sequence

45-72, 47-2-143, 48-59, 49-167, 60-168, 71-1-142.

47. ELECTRONIC BUZZER

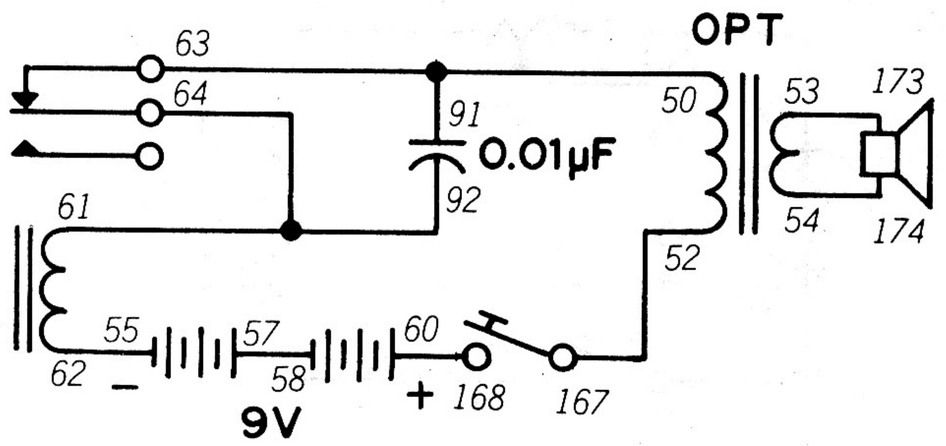

Here's a terrific electronic buzzer you can use for a doorbell or signaling device.

When you complete the wiring connections, press on the Key. You'll hear a loud "buzzing" sound from the Speaker. Now touch the Relay case while you hold the Key down. What do you feel? (*Don't worry – it won't shock you or hurt.*)

You felt the Relay case vibrating. This is because the Relay is rapidly opening and closing its internal switch. Look at the schematic – can you explain why this is happening?

When you press the Key, electricity can flow. When current reaches the Relay, the internal switch activates and *opens* the circuit. This cuts off current to the Relay, meaning the circuit once again is closed. But as soon as current again reaches the Relay – *you guessed it* – the Relay's switch opens the circuit, and repeats the entire cycle. The capacitor also plays an important part by charging and discharging each time the circuit opens and closes.

So in this circuit the Relay is a bit like a dog chasing its own tail – it keeps going around and around but never manages to catch it.

NOTES



Wiring Sequence

50-91-63, 52-167, 53-173, 54-174, 55-62, 57-58, 60-168, 61-64-92.

48. PHOTOMETER

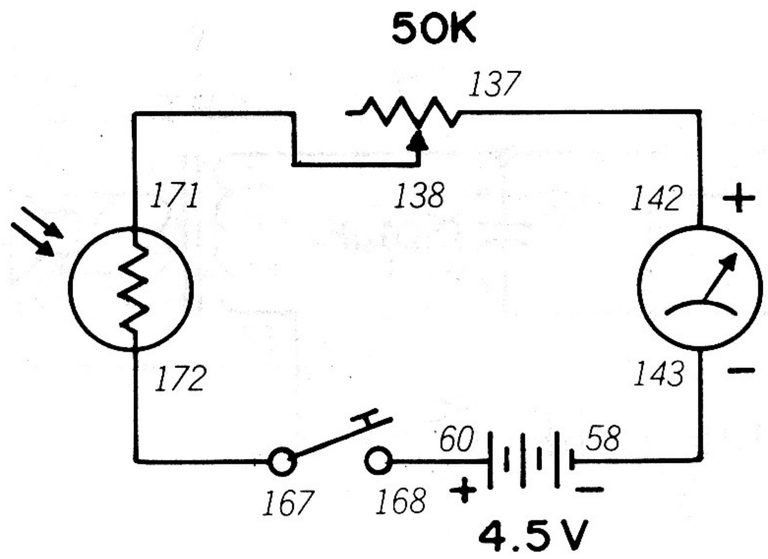

Back in Project 3, we used a component we called a CdS Cell. We haven't told you much about this item, but you've probably figured out from the Projects we've used it in that it has something to do with light. That's right – and this Project will show you how a CdS Cell operates.

Actually, figuring out how to get the Lamp to light shouldn't be that big an undertaking ... just turn power ON using the Control Knob. After you finish the wiring connections. Set the Select Switch to A or B and put the CdS Cell in light or darkness. You can find the right combination of these three by trial and error. But first try to figure out the answer by looking at the schematic.

You noticed that the Meter gave a higher reading in bright light. This is because the resistance of the CdS Cell changes with the amount of light that falls upon it. In bright light the resistance of the CdS Cell decreases and more current can flow to the Meter. In darkness the resistance of the CdS Cell increases and the reading on the Meter is lower.

All of this means that we can control many circuits by substituting the CdS Cell in place of a resistor. Try this in some of the Projects in this Manual.

(Oh, you want to know what "CdS" stands for? It's short for "cadmium sulfide." *Are you sorry you asked??*)

NOTES

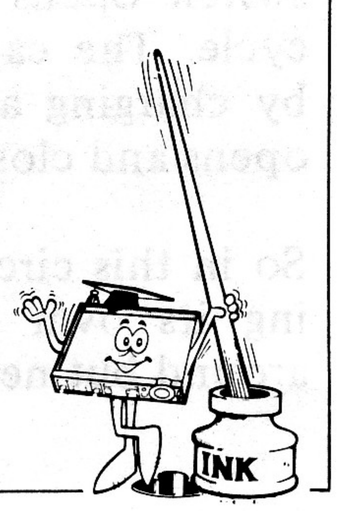

Wiring Sequence

58-143, 60-168, 137-142, 138-171, 167-172.

49. ELECTRONIC JIGSAW PUZZLE

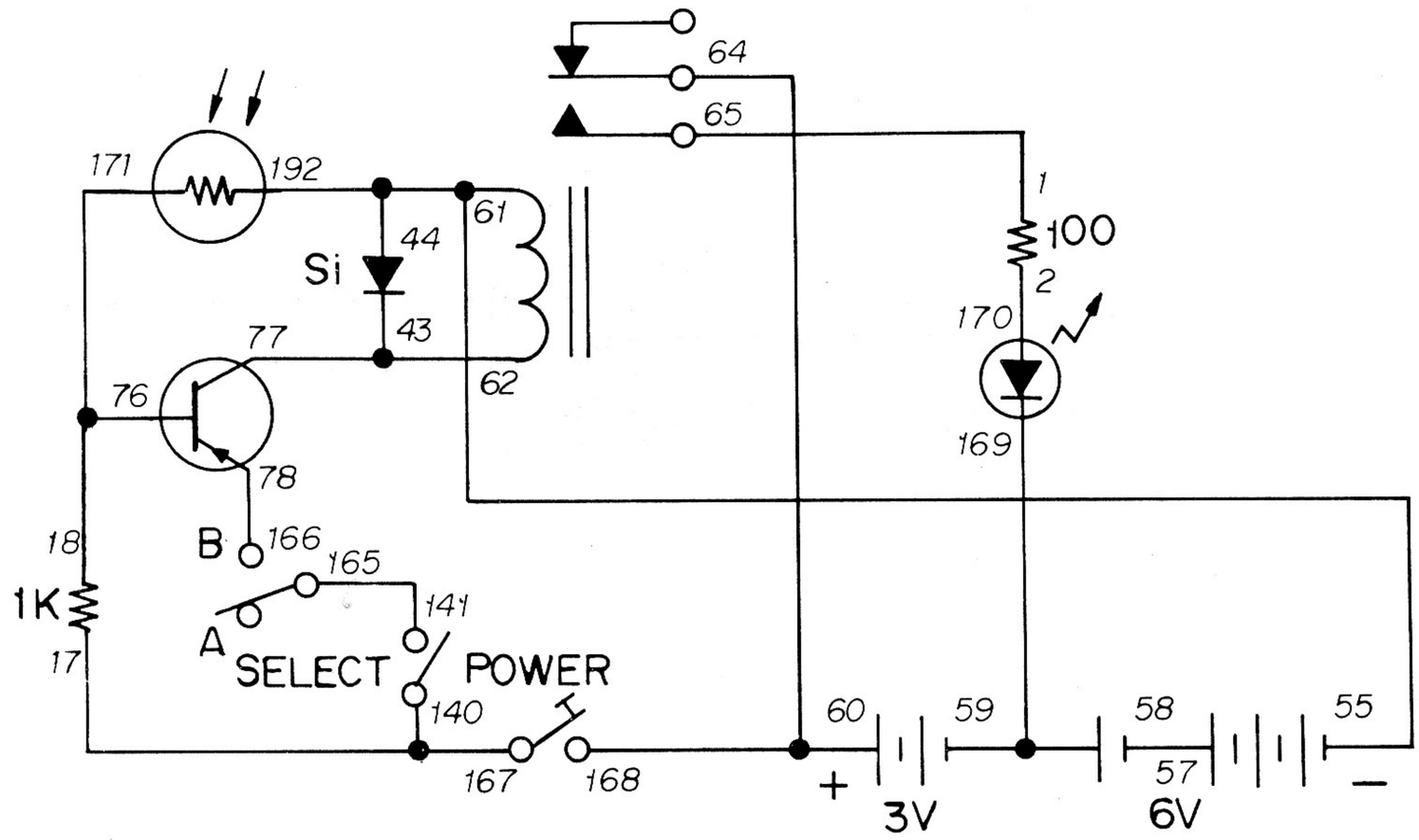

Here's a test of your ability to read schematics and understand the operation of the Relay and CdS Cell in your Kit. You've got to figure out for yourself how to get the LED to light – because we're not going to tell you.

Actually, figuring out how to get the LED to light shouldn't be that big an undertaking... just turn power ON using the Control Knob after you finish the wiring connections. Set the Select Switch to A or B, expose the CdS Cell to the light, and then to the dark. You can find the right combination of these three by trial and error. But first try to figure out the answer by looking at the schematic.

Try understanding this circuit by tracing the path the electricity must follow (and remember that electricity flows from negative to positive). See where the current path is broken and what must be done to close the circuit again. (Remember too that the resistance of a CdS Cell increases in darkness).

Think you understand how to light the LED? *Good!* Make a note of your guess, press the Key and ...

Did it work???

NOTES

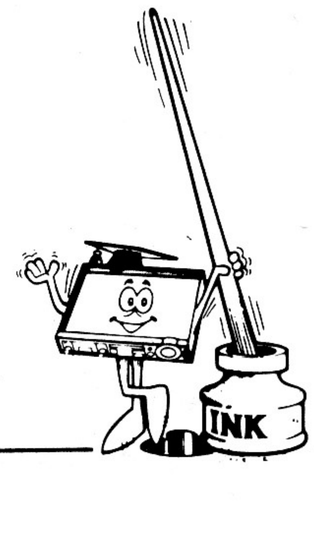

Wiring Sequence

1-65, 2-170, 17-140-167, 18-76-171, 55-61-44-172, 57-58, 59-169, 60-64-168, 62-43-77, 78-166, 141-165.

50. NIGHT LIGHT

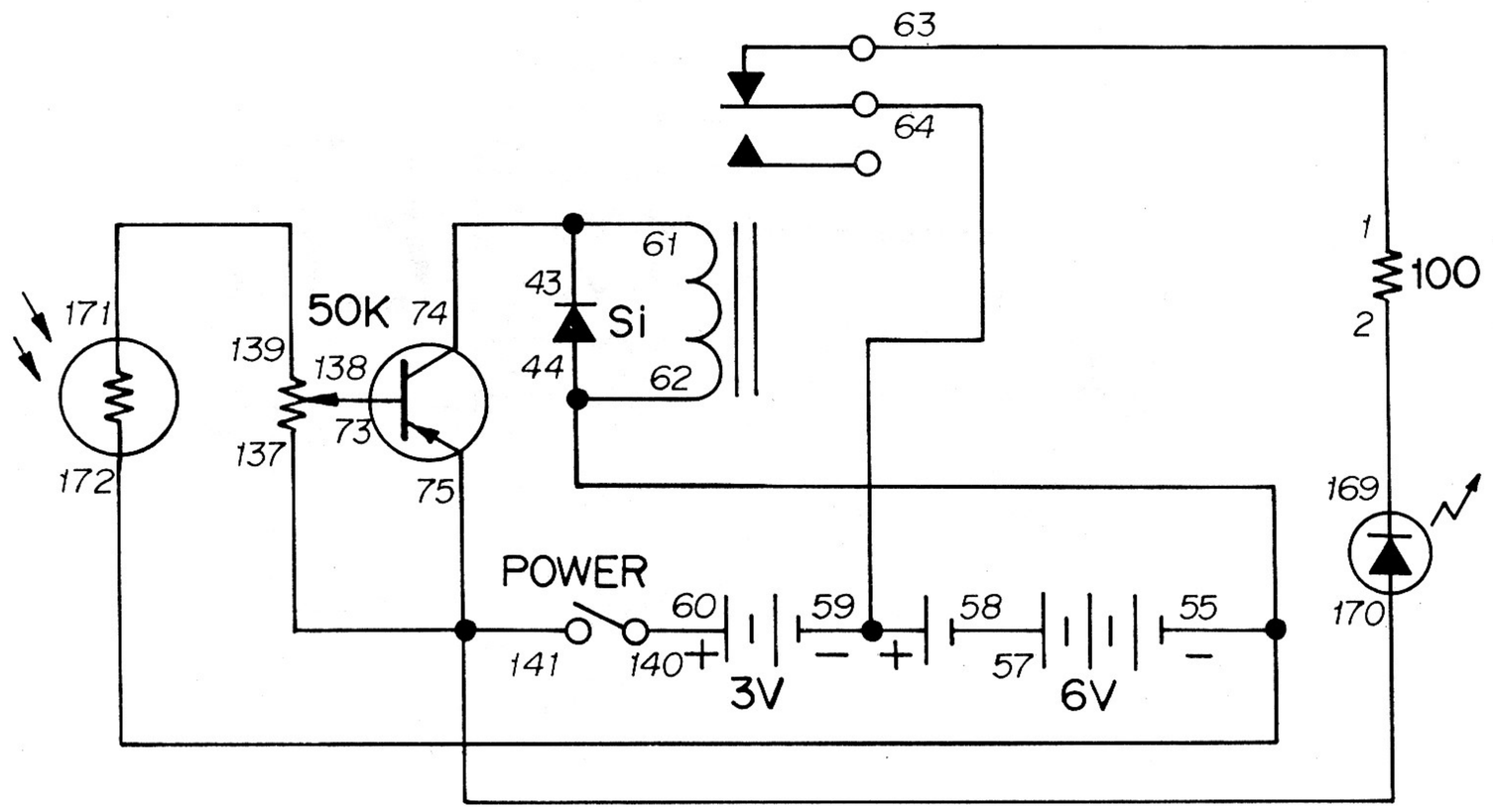

One very practical use for a CdS Cell is to turn on lights or other devices at sunset or sunrise. Here's a circuit which will light up the LED at night.

While you build this Project, take a good look at where the CdS Cell is placed in the circuit. Do you have any idea why it is placed there instead of at some other point? (If you do, make a note ... because we'll soon find out.)

Turn the Control Knob to ON and carefully adjust it until you reach the point where the LED lights. Once you reach this point, reduce the Control setting until the LED goes out.

Once you get this Project "set" to the right Control setting, it will light the LED once the light surrounding your Kit dims. You can find a more complex version of this circuit in some street lights.

(Oh yes, before we forget, here's another clue why we located the CdS Cell where we did in this Project – it has something to do with the Transistor.)

NOTES

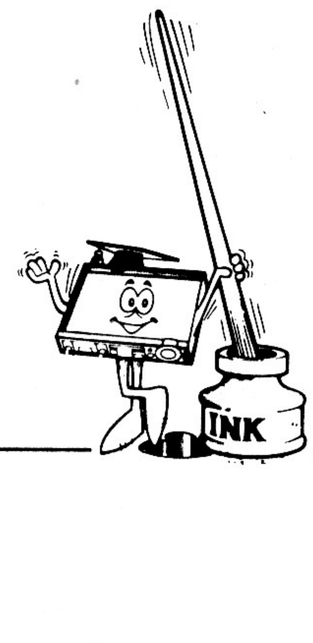

Wiring Sequence

1-63, 2-169, 55-44-62-172, 57-58, 59-64, 60-140, 61-43-74, 73-138, 75-137-141-170, 139-171.

51. THE LIGHT SWITCH

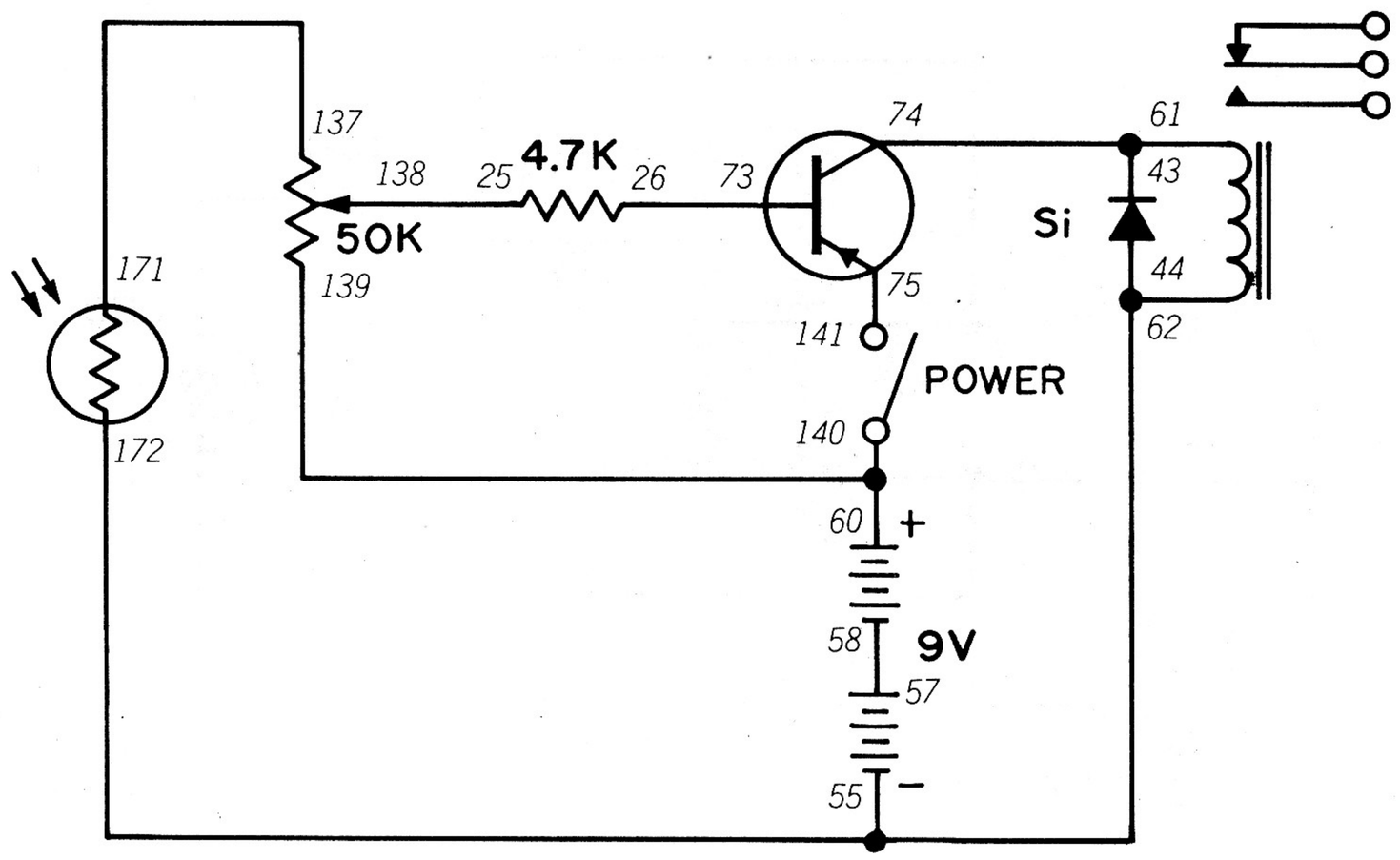

A LIGHT SWITCH?? Everyone knows what a light switch is—it's that thing on the wall that turns the lights off and on ...

WRONG!

This isn't a switch that turns on a light—this is a switch **turned on** by light! Actually, it's a Relay controlled by the CdS Cell in your Kit.

After finishing the wiring connections, turn the Control Knob clockwise to switch power ON. Carefully turn it until you hear a faint "click". This means the Relay has been activated. By itself this isn't too exciting—but remember that a Relay is a switch. That means that you can connect other circuits to this and control them by the amount of light falling on the CdS Cell (remember how we said earlier that even complex electronic equipment was actually made up of simpler circuits?).

You might notice something similar between this Project and the last one. This one also has a Transistor—and see how the Transistor and CdS Cell are connected in both Projects (they're connected through resistances)! The straight line inside the Transistor cell where the CdS Cell is connected is called the **base**, and the base ...

Hey, we're getting ahead of ourselves! We'll talk about transistors later! But in the meantime, take a guess as to how a transistor works. (Be sure to make a note about what you think....)

NOTES

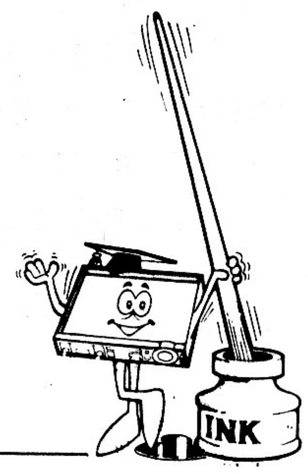

Wiring Sequence

25-138, 26-73, 55-62-44-172, 57-58, 60-140-139, 61-43-74, 75-141, 137-171.

52. ELECTRONIC ELEPHANT

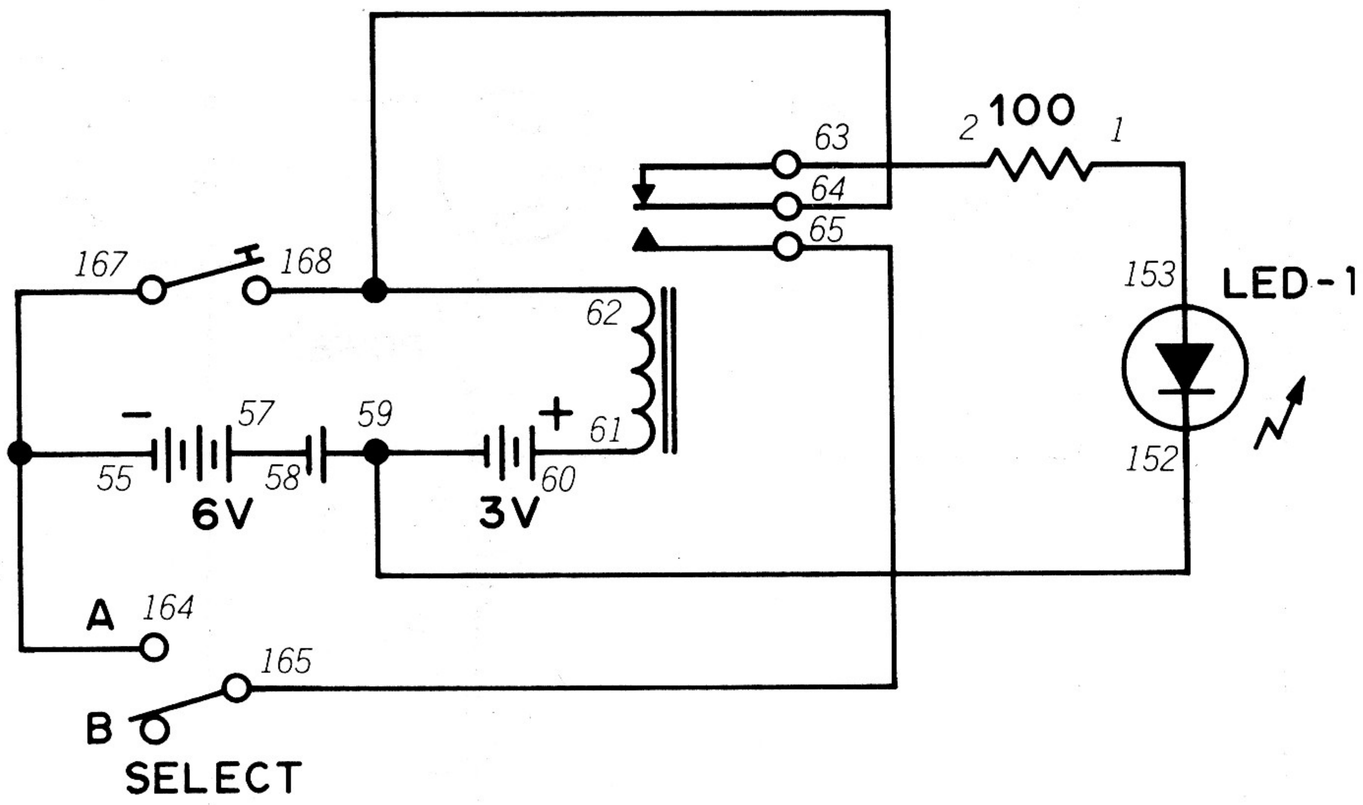

There's an old saying that elephants never forget (*what do they have to remember?*). This Project is like an elephant ... it never forgets either! *(But it doesn't eat peanuts...)*

When you finish the wiring connections, you'll notice that LED 1 is lit. Set the Select Switch at B and press the Key. LED 1 will go out, but will light again when you release the Key. Now set the Select Switch to A and press the Key. What happens when you release the Key? Now set the Select Switch back to B and see what happens.

While you've got the Select Switch at B, try this: press the Key so LED 1 goes out. Keep holding the Key down so LED 1 stays dark and set the Select Switch to A. Release the Key. What happens? Try pressing the Key a few times to see if there's any change.

This Project is an example of a **latching** circuit. When you press the Key with the Select Switch at A, the LED will go out and will not light again no matter how much you press the Key. We say this circuit **memorizes** the LED "off" state at A. You also found that if you had LED 1 out at B and then set the Select Switch to A that the LED would stay out even when you released the Key.

You may have heard people refer to a computer's "memory." Information is stored in a computer by electronic circuits. In early computers relay circuits such as this were used to store information!

NOTES

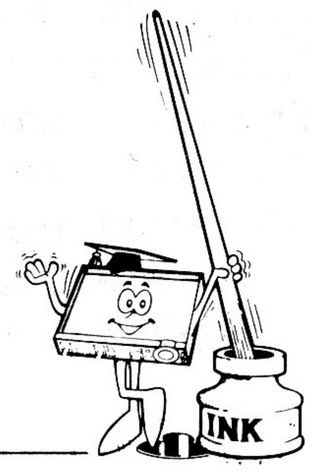

Wiring Sequence

1-153, 2-63, 55-167-164, 57-58, 59-152, 60-61, 62-64-168, 65-165.

53. CAPITAL LETTER DISPLAYS

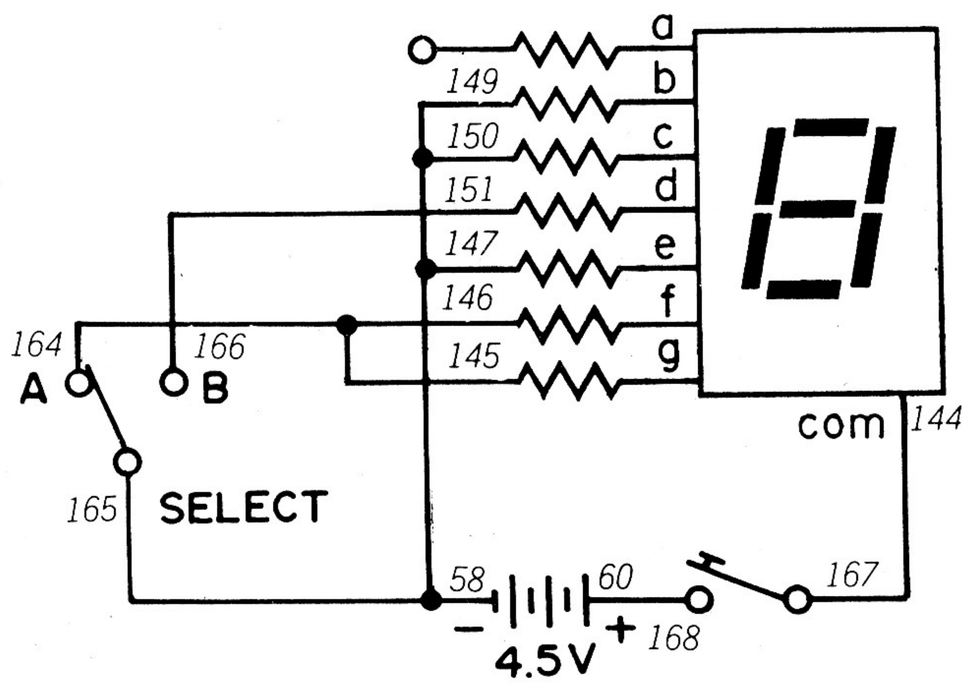

We've already seen how the Display in your Kit can be used in different circuits—now let's see how it works.

The LED Digital Display is actually seven small LEDs in the same package (back in Project 1 we called these LEDs "segments"). You'll notice in the schematic that there are resistor symbols connected to the Display symbol. These resistances are actually "built-in" the Display to protect the segments from damage from too much current.

You can form different letters on the LED Digital Display by wiring the segments together in various ways. In this Project, the Display will show either "J" or "H" depending upon the setting of the Select Switch.

But those aren't the only capital letters that your Kit can display. By simply changing the wiring connections at the Display, you can get it to show A, E, C, F, G, I, S or U. But we're not going to tell you how to display these letters ... just play around with this Project a while and you'll soon find out how for yourself.

(Once you do discover how to make these letters, be sure to make notes about how you did it—include the wiring sequences too. You'll find this information handy when you start cooking up your own circuits!)

NOTES

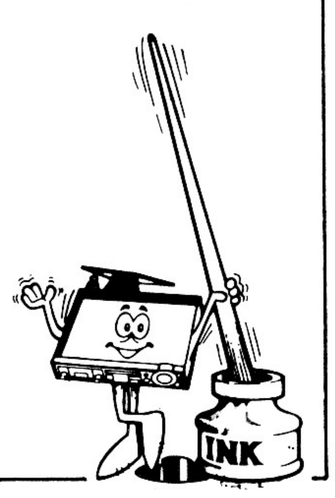

Wiring Sequence

58-165-149-150-147, 60-168, 144-167, 146-145-164, 151-166.

54. SMALL LETTER DISPLAYS

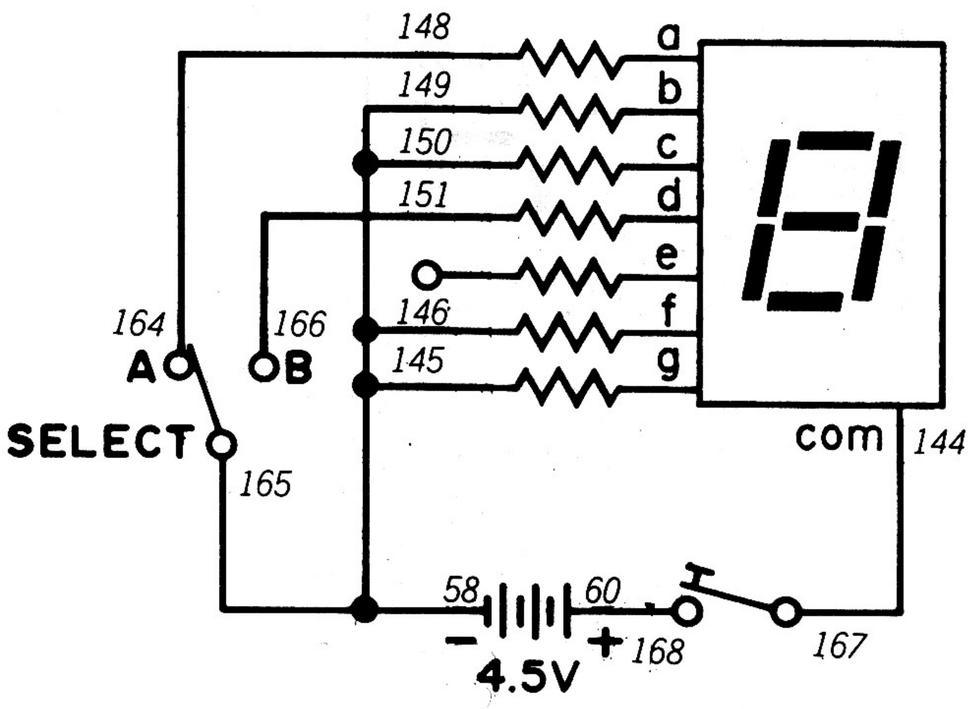

TYPE IS CLOSED

The Digital Display in your Kit can also be used to show small letters, as this Project demonstrates. As you change the setting of the Select Switch, either "q" or "y" will be shown on the Display.

By changing the wiring connections to the Display, you can display a, c, b, d, e, g, h or o. Be sure to keep notes for use in your own circuits.

NOTES

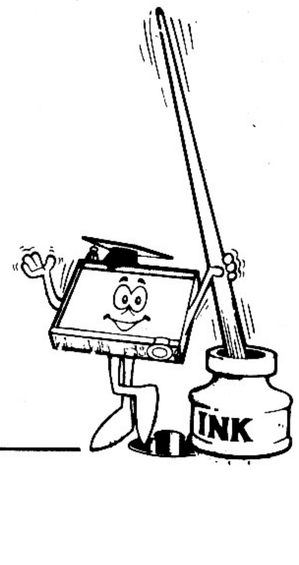

Wiring Sequence

58-165-149-150-145-146, 60-168, 144-167, 148-164, 151-166.

55. NUMBER DISPLAYS

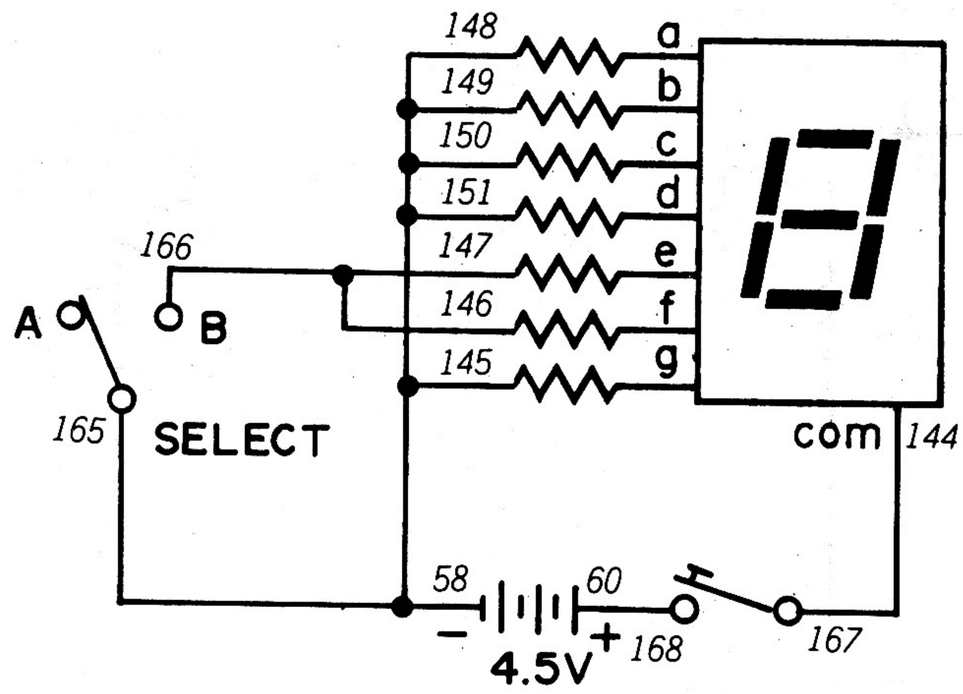

You might suppose, the LED Digital Display in your Kit also can display numbers. You've right! This Project will display either 3 or 8 when you press the Key depending upon the setting of the Select Switch.

By changing the wiring connections on the Display, you can also make the numbers 1, 6, 2, 7, 4, 9, 5 and 0 appear. Be sure to keep notes of what you discover.

NOTES

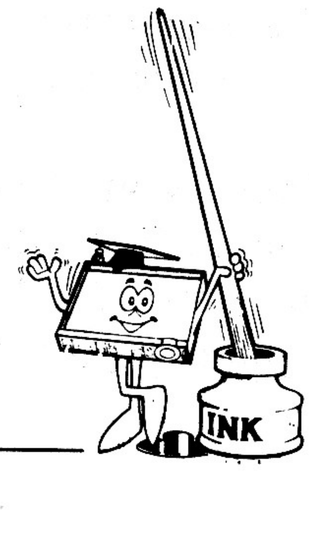

Wiring Sequence

58-165-148-149-150-151-145, 60-168, 144-167, 146-147-166.

56. MEET THE TRANSISTOR

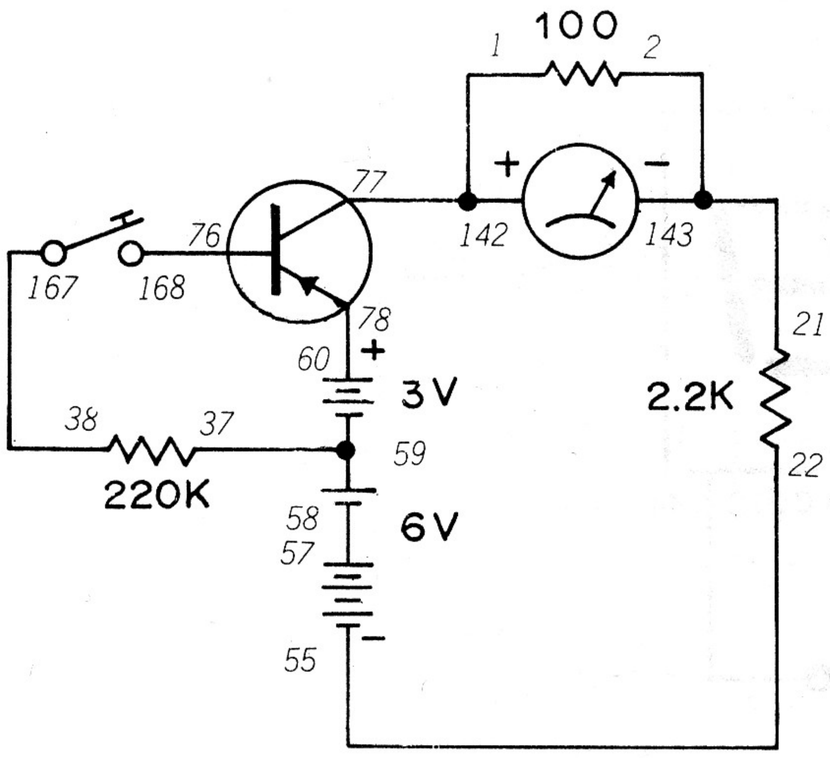

SCHEMATIC 1

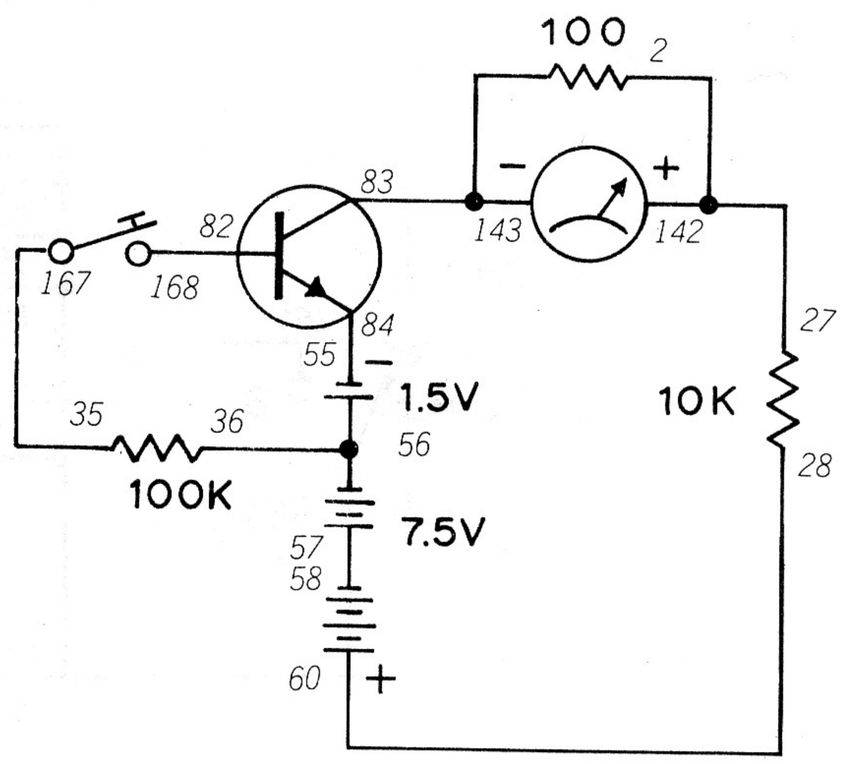

SCHEMATIC 2

You've heard about transistors for a long time—but what are they and how do they work? This Project will let you find out!

Look at the schematic symbol for a transistor. You'll notice that there are three parts: an **emitter** (the line with the arrow), the **base** (the heavy vertical line) and the **collector** (the normal line). You'll notice that some transistors have the emitter's arrow pointing toward the base—these are **PNP transistors**. Others have the arrow pointing away from the base, and these are **NPN transistors**. We've included two circuits here using both types.

(PNP and NPN refer to the internal construction of a transistor—in case you were wondering!)

Look carefully at schematic 1. You'll see there are two paths for the current: one from base to emitter and another from the collector to emitter. The transistor is a PNP type. Notice the base-to-emitter path is open until you press the Key.

When you finish wiring the circuit shown in schematic 1, the Meter pointer will not be moving. But press the Key and see what happens. Can you explain what you saw?

The secret to a PNP transistor is that a small change in the current from base to emitter causes a big change in the current flowing from collector to emitter. Here a large current flowed from collector to emitter once you let current flow from base to emitter by pressing the Key.

Schematic 2 shows a similar arrangement using a NPN transistor. However, with the NPN transistor a small change in the current flowing from emitter to base can make a big change in the current flowing from emitter to collector. (Notice the different current flow directions in PNP and NPN transistors?)

The ability of the emitter/base current to control the collector/emitter current is called *amplification*. It's just like we took a weak current and made it bigger. Amplification is something transistors do very well indeed!

Wiring Sequence

(1) 1-77-142, 21-2-143, 22-55, 37-59, 38-167, 57-58, 60-78, 76-168.

(2) 1-143-83, 2-27-142, 28-60, 35-167, 36-56, 55-84, 57-58, 82-168.

57. TRANSISTORS AS SWITCHES

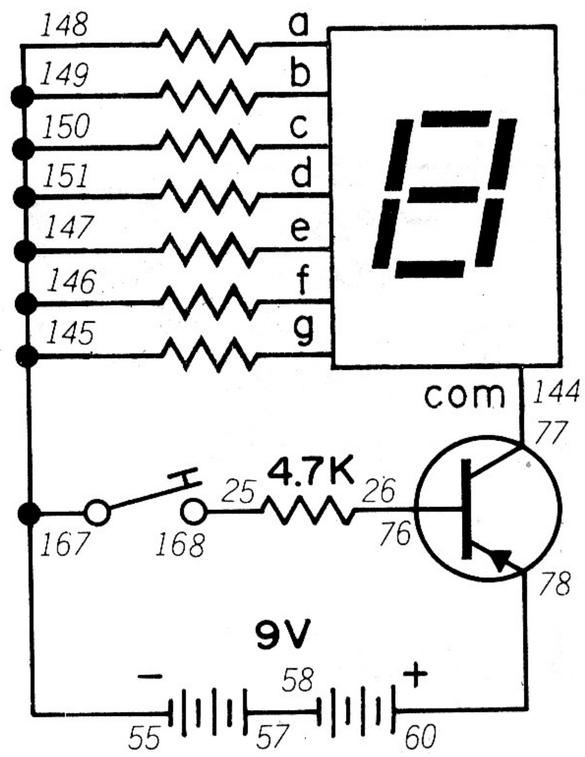

Transistors do more than just amplify—they can also be used as switches. Can you think of how they could be used this way? (*No fair peeking at the answer below!*)

You press the Key, you'll see the LED Digital Display show "8." Release the Key and the Display will become dark again. Look at the schematic for this Project—do you see what is going on?

In our last Project, we saw how a small change in the emitter-to-base current can cause a big change in the emitter-to-collector current. But did you realize that in most PNP transistor circuits there can't be any collector-to-emitter current flow unless the base-to-emitter current flow is at a certain level so you can turn off a PNP transistor circuit just by lowering the base-to-emitter current. (Or turn it on by increasing the base-to-emitter current.)

In future Projects, watch for transistors being used as switches. And when you build circuits on your own, think of ways you can make use of a transistor's switching ability (wouldn't the CdS Cell in the emitter-to-base current path be interesting?).

NOTES

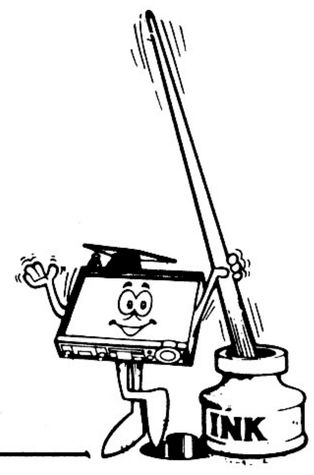

Wiring Sequence

25-168, 26-76, 55-167-148-149-150-151-147-146-145, 57-58, 60-78, 77-144.

58. ELECTRICITY FROM SOUND

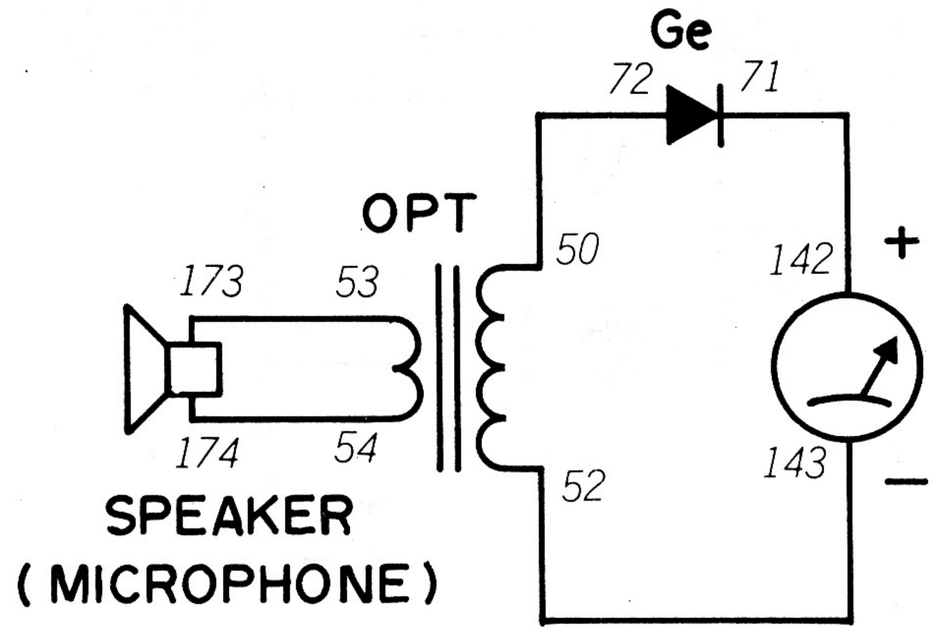

Can you turn your voice into electricity? Maybe you can, maybe you can't—but you'll never know until you build this Project!

This circuit is simple to build. Once you are finished, try talking into the Speaker as loudly as you can. Does the Meter pointer move? If not, try speaking louder or even yelling. You might also try putting the speaker of a portable radio up against the Speaker in your Kit. Can you get the Meter pointer to move?

At best you probably only got a very small movement from the Meter pointer. But can you guess why the Meter pointer would even move at all?

Speaker operation is based upon electromagnetism as well. When the coil of wire in a speaker carries electricity, it moves a paper cone back and forth to produce sound waves you can hear. The coil is able to move because a speaker also has a permanent magnet. The electromagnet and the permanent magnet take turns attracting and repelling each other when current flows through the electromagnet.

In this Project, sound waves striking the Speaker's paper cone causes the coil of wire (attached to the cone) to move as well. The coil of wire moves back and forth across the permanent magnet—making the magnetic field seem to "move." And—you guessed it—this causes electricity to flow in the moving coil.

This is the same principle used in microphones. Since the Speaker in your Kit is not designed to pick up sounds and convert them into electricity, the Speaker doesn't work as well as a true microphone.

NOTES

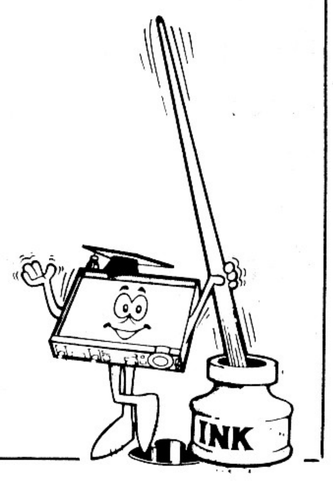

Wiring Sequence

50-72, 52-143, 53-173, 54-174, 71-142.

59. ELECTRIC MONEY

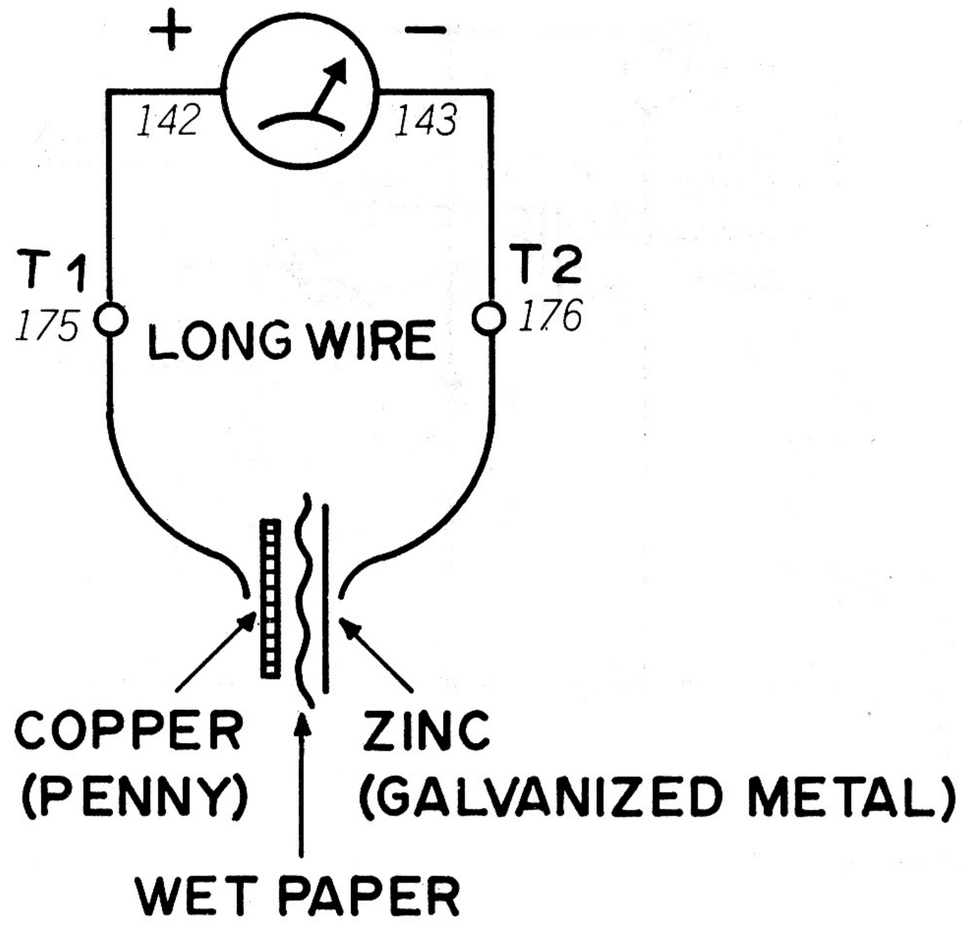

Do you know you can take some money and change it into a battery? *No, we don't mean buying a battery from your local Radio Shack ...* we're talking about this Project!

You're probably already aware that the Batteries in your Kit create electricity through chemical action. But did you know that you can duplicate this chemical action using ordinary coins?

All you need is two different metals (such as copper and nickel) and an **electrolyte**. An electrolyte is a substance which pulls electrons out of the two different metals, setting up an electric current. For this Project you can use a piece of paper dipped in vinegar for an electrolyte.

Arrange your "coin battery" by placing the electrolyte between a penny and another coin, such as a nickel or quarter. Touch one wire to the penny and the other wire to the second coin. Do you see the Meter pointer move?

You may not see any movement on the Meter. If so, try another coin with the penny. You might also want to try and stack several coins together in this manner: penny, electrolyte, other coin, electrolyte, penny, electrolyte, another coin, etc. Just make sure one wire touches a penny and the other way touches the second type of coin you're using.

Don't be too frustrated if you can't get much Meter movement on this Project—a "coin battery" can only generate a very weak current. Be sure to try several combinations of coins to see which work best.

NOTES

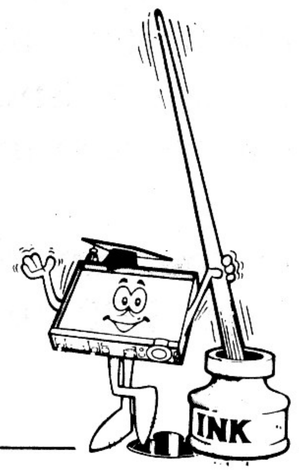

Wiring Sequence

142-175, 143-176, T1-LONG WIRE (to penney), T2-LONG WIRE (to other coin)

60. A PUSH-PULL AMPLIFIER

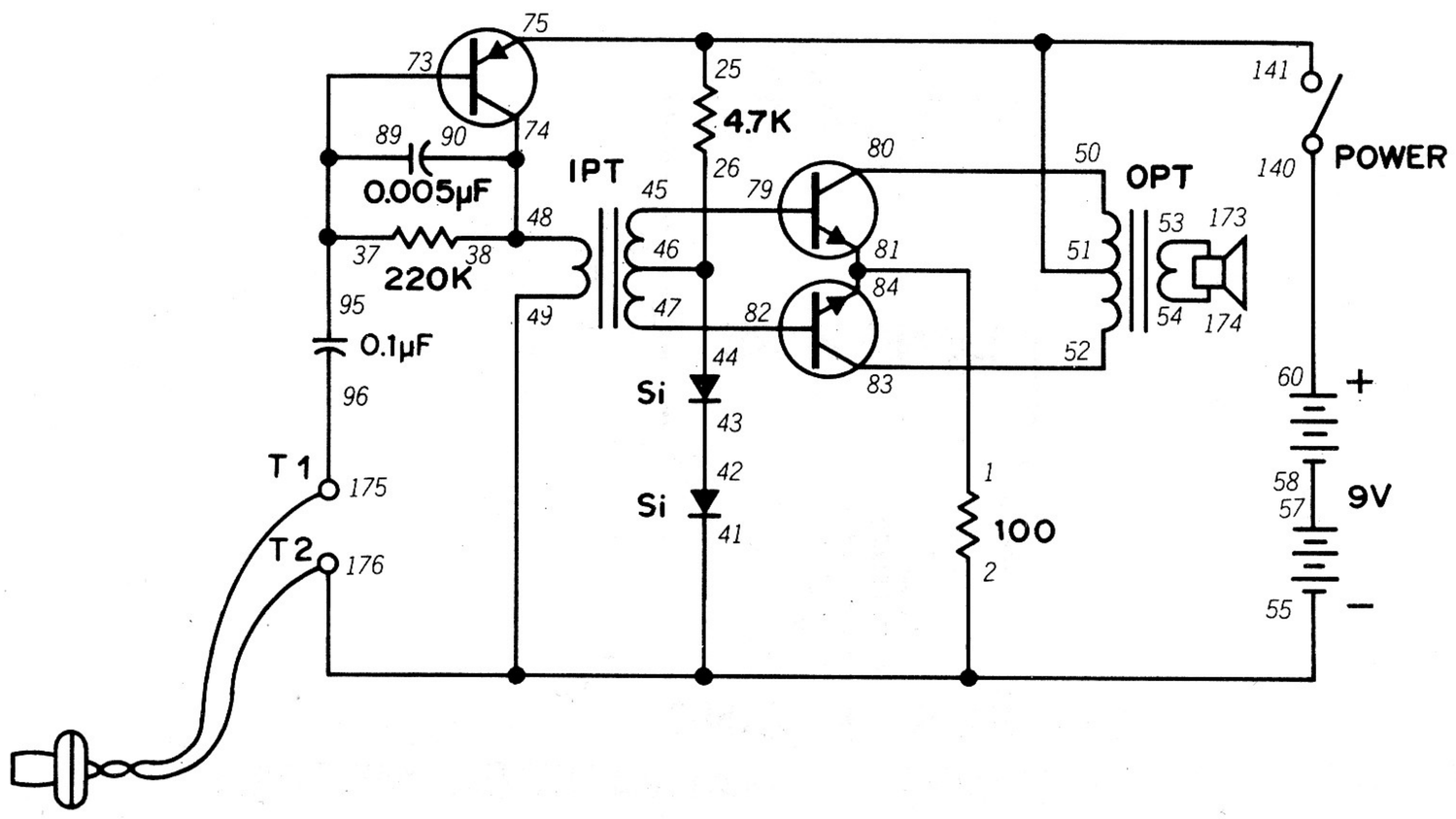

We've said that electronic devices are made up of different basic circuits. One of these is the **amplifier**. As its name tells you, this circuit uses the transistor's ability to amplify weak currents.

Look at the schematic and notice how the two 2SC transistors are connected together. This is called a **push-pull** amplifier. Can you guess how this amplifier works? (We'll tell you in a moment ...)

After finishing the wiring connections, connect the Earphone to Terminals 1 and 2 on the front panel of your Kit. Turn the Control Knob to ON and speak into the Earphone. What do you hear from the Speaker?

This Project takes the weak current from the Earphone and amplifies it to a level you can hear from the Speaker. In a push-pull amplifier, both transistors "take turns" amplifying the signal from the Earphone. This lets both transistors do their job better and prevents *distortion*—what you hear from the Speaker isn't much different from what was spoken into the Earphone.

If you want to get higher gain, change the capacitor from 0.005 μF to 0.001 μF.

Amplifiers are very common circuits. How many devices can you think of that likely use an amplifier circuit? (Don't forget to record your guesses ...)

We've been using the Earphone so far both for listening to sound and also as a microphone. How do you think an Earphone works? (*Here's a hint: it doesn't have any coils of wire nor any magnets at all.*) Give up? Okay, here's another clue: it's known as a *crystal* Earphone. Take your best guess and we'll find out for sure later!

NOTES

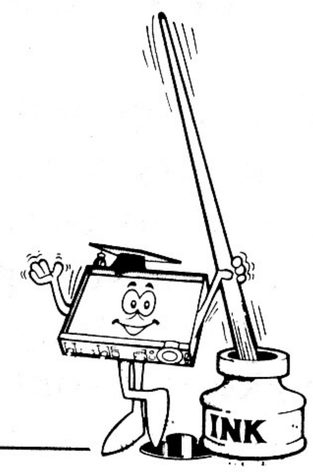

Wiring Sequence

1-81-84, 2-41-49-55-176, 26-44-46, 37-73-89-95, 42-43, 45-79, 47-82, 48-38-74-90, 50-80, 51-25-75-141, 52-83, 53-173, 54-174, 57-58, 60-140, 96-175, T1 – EARPHONE – T2.

61. UNDERSTANDING OSCILLATORS

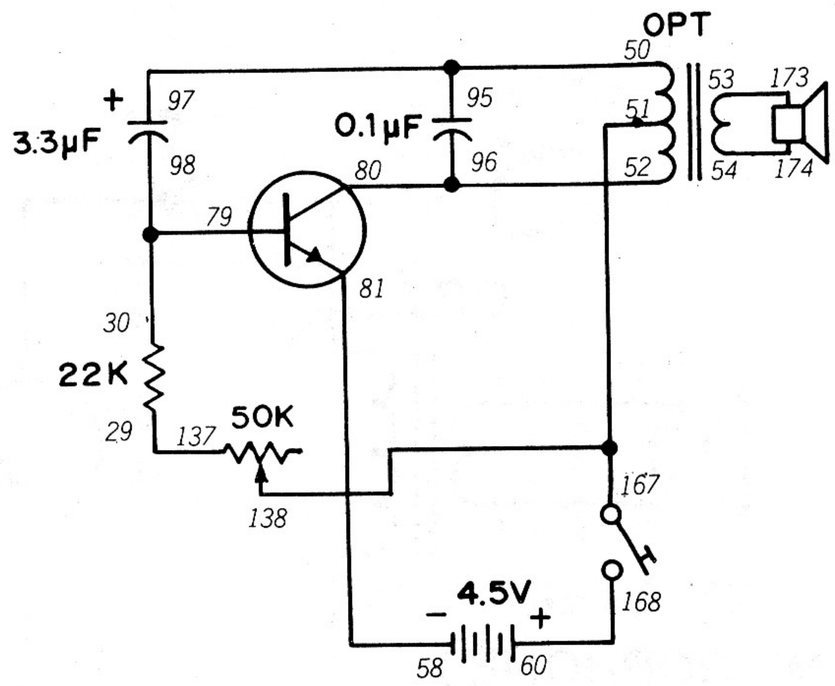

We've used oscillators in many Projects so far ... but we've never sat down and tried to figure out what an oscillator is and how it works. This Project will let us do just that.

When you finish wiring this Project, press the Key. You'll hear a sound from the Speaker. Now rotate the Control Knob back and forth. What do you now hear from the Speaker?

Oscillators make use of *feedback*. That means part of the output of the circuit is sent back into the input. Look carefully at the schematic for this Project—can you see where some of the output goes back into the input?

Let's look how the current flows. When you press the Key, current flows from the – terminal of the Batteries through the Transistor's emitter, then to its base and back to the Batteries through the 22K and 50K resistances. Since we now have current flowing from emitter to base, current can flow from the collector to emitter (remember what we said about transistor operation back in Projects 56 and 57?).

Current will also flow in the OPT Transformer the Speaker is connected to. Think that electromagnetism might come into play here? You're right—an electric current is set up from the top of the Transformer coil through the 3.3 μF capacitor, the Transistor's base and emitter, the Key, Batteries and back to the Transformer by the connection at the middle of its coil (that's called a *tap*).

As you might expect, charging and discharging of the 3.3 μF capacitor is the key to this Project's operation. When the 3.3 μF Capacitor discharges, it does so into the base of the Transistor. It just happens that this current is **opposite** from the emitter to base current (it's + instead of –). You guessed it—it shuts off the emitter to base current. But when the Capacitor discharges low enough, emitter-to-base current again flows, the 3.3 μF Capacitor recharges, and the whole cycle starts again.

That's how feedback works. And feedback is necessary to make an oscillator go!

Wiring Sequence

29-137, 30-79-98, 50-97-95, 51-167-138, 52-80-96, 53-173, 54-174, 58-81, 60-168.

62. A PUSH-PULL OSCILLATOR

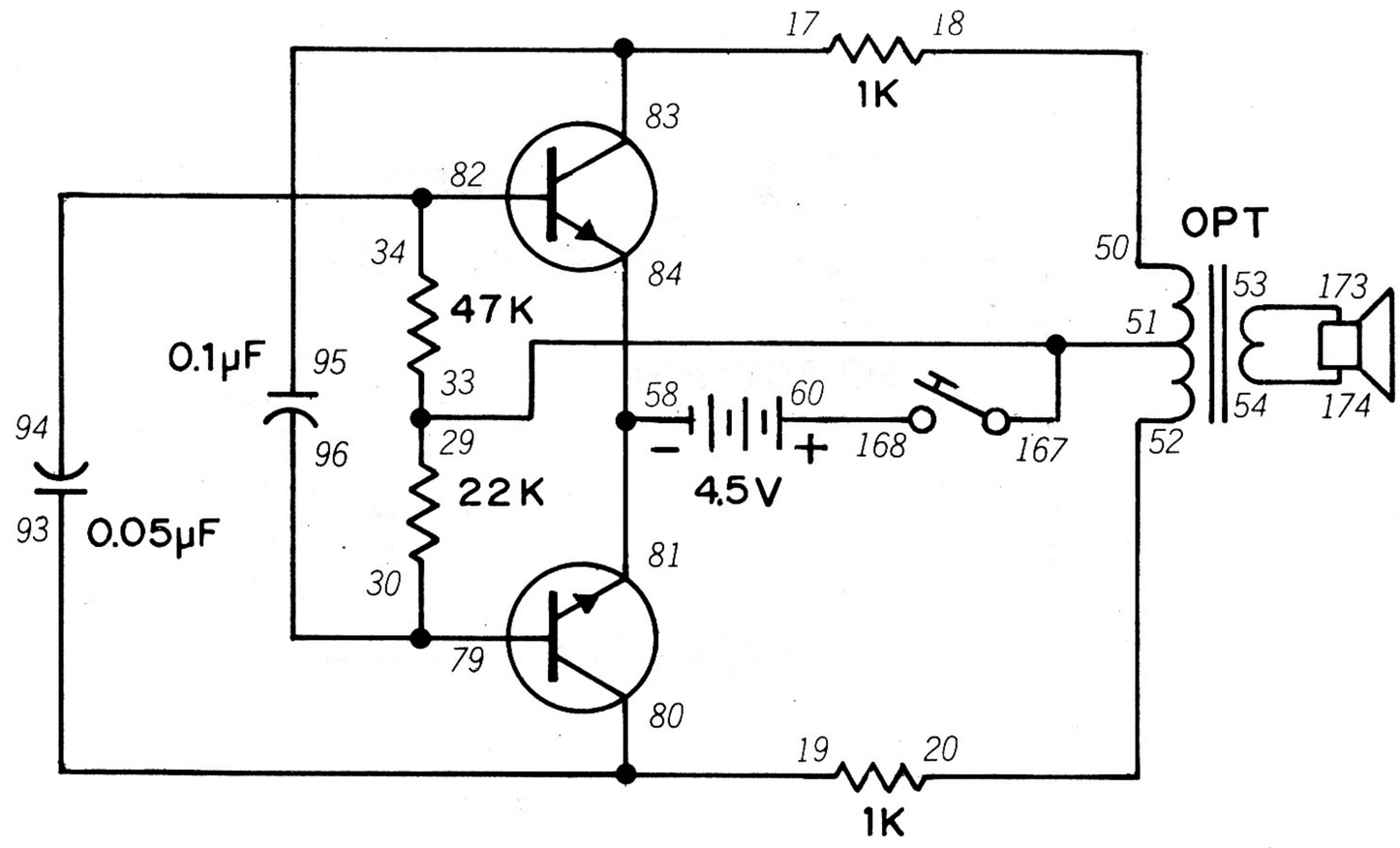

We've already seen a push-pull amplifier in operation (Project 60), so why not an oscillator? This Project shows you how to build one.

Once you finish the wiring connections, hold the Key down and listen to the sound from the Speaker. Can you think of any advantages this oscillator circuit has over the circuit in our last Project?

One big advantage is more efficient operation. Notice how feedback comes through the 0.05 μF and 0.1 μF capacitors connected to the Transformer's coil. But see how each capacitor is connected at the ends of the Transformer's coil. This means that when one capacitor is charging, the other is discharging. And this means ...

... *that when one Transistor is off the other is operating.* There's always one Transistor operating, unlike the previous Project where the Transistor was switching on or off during operation.

Since the 0.05 μF and 0.1 μF capacitors control circuit operation, try using different values of capacitors in their place. And since the 47K and 22K resistors control the emitter-to-base current, try using different values in their place and see what happens.

Be sure to keep notes of what you discover. What effects do higher and lower values have upon operation? You'll find this information handy when you start designing your own oscillator circuits.

NOTES

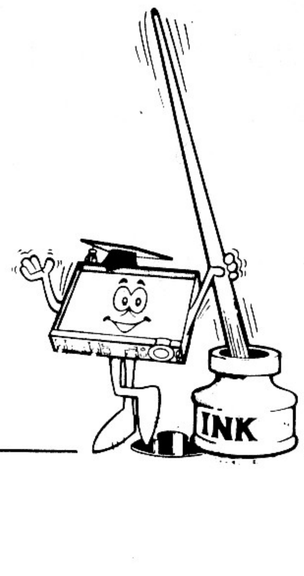

Wiring Sequence

17-83-95, 18-50, 19-80-93, 20-52, 29-33-51-167, 30-79-96, 34-82-94, 53-173, 54-174, 58-84-81, 60-168.

63. AN INVERTER CIRCUIT

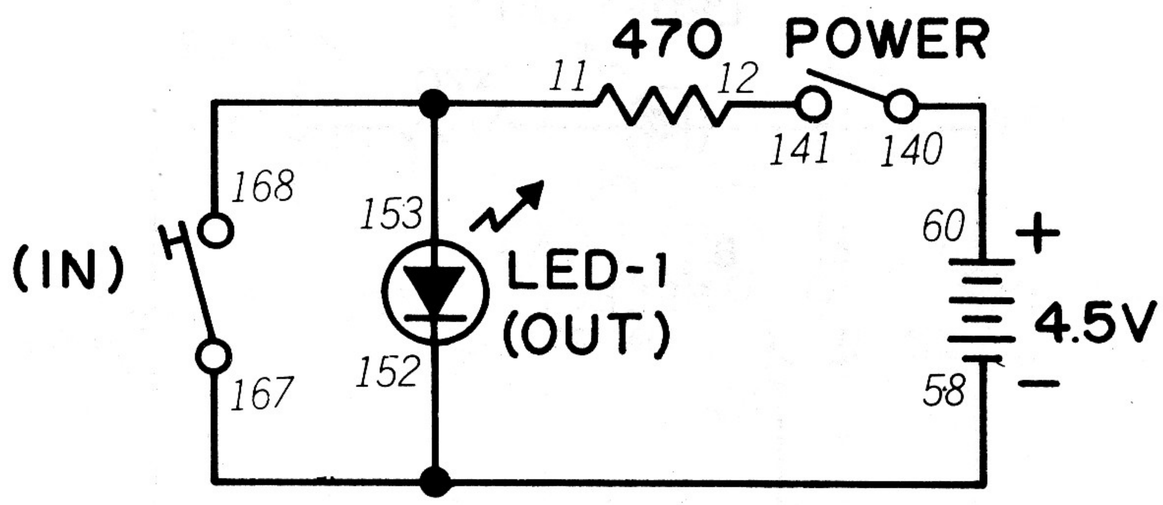

We've mentioned digital electronics in earlier Projects, but what does the term mean? We've kept you in suspense long enough—it's time to find out.

Digital circuits are also known as *logic* circuits. They are (if you'll excuse the pun!) "logical" because *they can make decisions.*

When we talk about digital circuits, we sometimes use the numbers 0 and 1. Number zero means the circuit is off while 1 means the circuit is on. All digital circuits are based on the simple fact that a circuit can be on or off.

Let's start out by exploring an **inverter** circuit. An inverter is a circuit that takes an input (an input is something that goes "into" a digital circuit) and "reverses" it.

When you finish wiring this Project, turn the Control Knob to the right to switch power ON. LED 1 will light. This can be called 1. When you press the Key, LED 1 goes out. This is 0.

But notice how the inverter "reverses" the input. When there is no input (you don't press the Key), there is an output (LED 1 is lit). But if there is an input (you press the Key) there is no output (LED 1 goes out).

By the way, an output is something that "comes out of" a digital circuit.

Since an inverter reverses an input, what do you think the appropriate number would be if the Key is not pressed? If the Key is pressed? *(No fair peeking at the answer!)*

(It's night into day!)

If the Key is not pressed, that's 0 since the output (LED 1 being lit) is 1. And if the Key is pressed, that's 1 since the output is 0. Remember that the inverter reverses an input! (Or you might say it

NOTES

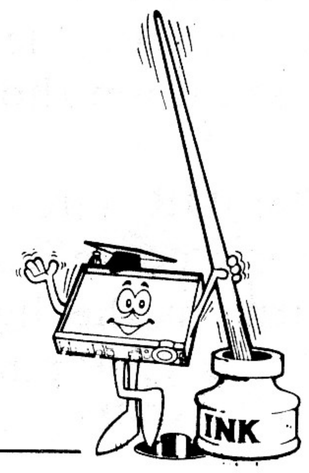

Wiring Sequence

11-153-168, 12-141, 58-167-152, 60-140

64. MEET THE OR CIRCUIT

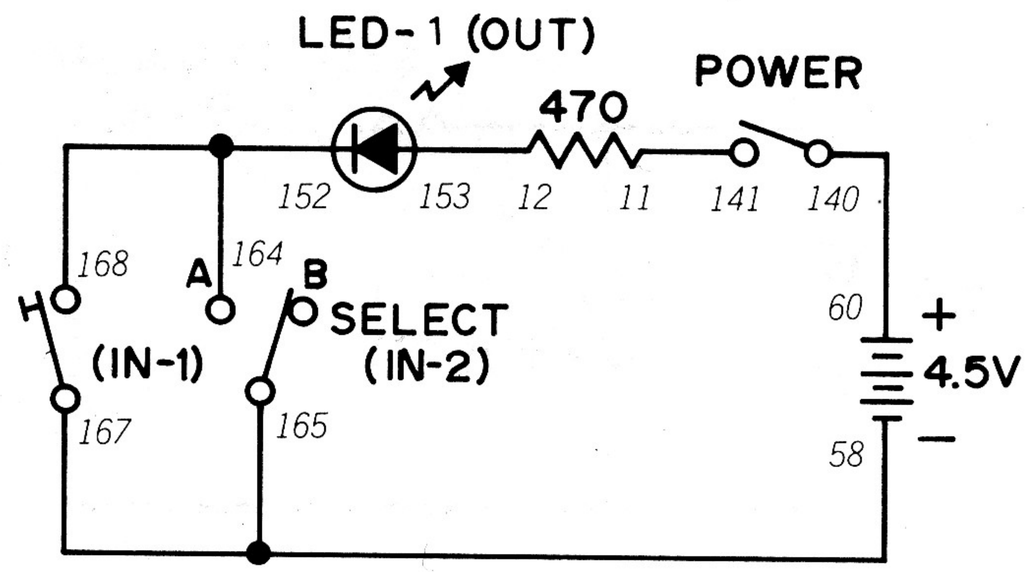

We mentioned in our last Project that digital circuits can make decisions. Here's one that decides if someone's knocking on its gates!

This Project is a very simple OR circuit. Set the Control Knob to ON and set the Select Switch to B. You'll notice that LED 1 is out. Now press the Key. What happens? Release the Key and set the Select Switch to A. What happens now? Leave the Select Switch at A and press the Key again. Any change?

You saw that as long as you had one of the inputs at 1, LED 1 lit (also became 1). It stayed on even when you had both inputs at 1 (Key pressed and Select Switch at A). This is how an OR circuit works–it produces an output whenever at least one of its inputs is on (or 1, as digital electronics people like to say).

Circuits like this are sometimes called **gates**. It's not too hard to see where the name came from–the circuit "lets in" inputs and gives an output based upon those inputs.

The OR circuit is very handy! For example, a more complicated OR circuit could be used to turn on the lights if it got too dark in a room **or** if it is 7:00 p.m. Can you think of other good uses for an OR circuit? (Be sure to record what you think....)

NOTES

Wiring Sequence

11-141, 12-153, 58-167-165, 60-140, 152-164-168

65. INTRODUCING THE AND GATE

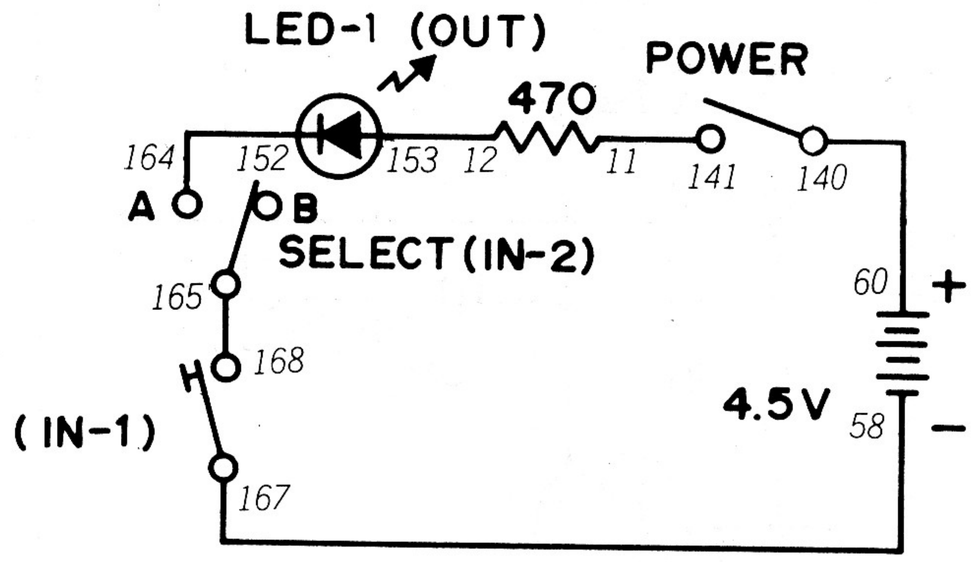

Before we go any further, what do you suppose an AND gate does? Think about it a second ... since you know what an OR circuit does, what would it be logical *(pardon the pun again!)* for an AND circuit to do?

As you build this Project, make sure the Select Switch is set to B. Now turn the Control Knob to ON and press the Key. What happens? Now release the Key and set the Select Switch to A. What happens now? Finally, leave the Select Switch at A and press the Key. Anything different happen?

You saw that nothing happened until you had the Select Switch at A and the Key pressed. When you had **both** inputs at 1, LED 1 came on. An AND gate is a circuit whose output doesn't come on until **all** the inputs are also on.

You can see that the AND gate "adds" inputs. If the number equals the number of inputs it has, an output results. If not, no output. *(Say, do you suppose an AND gate could be used in computers or calculators? No fair peeking at the answer.)*

You bet your sweet bippy they're used in computers and calculators!

NOTES

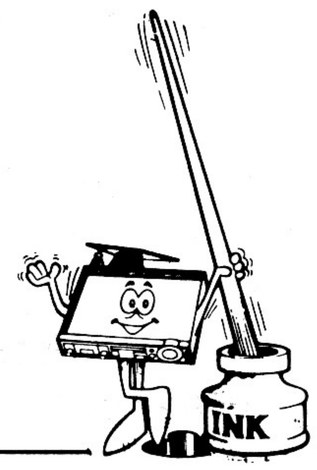

Wiring Sequence

11-141, 12-153, 58-167, 60-140, 152-164, 165-168

66. USING THE NOR GATE

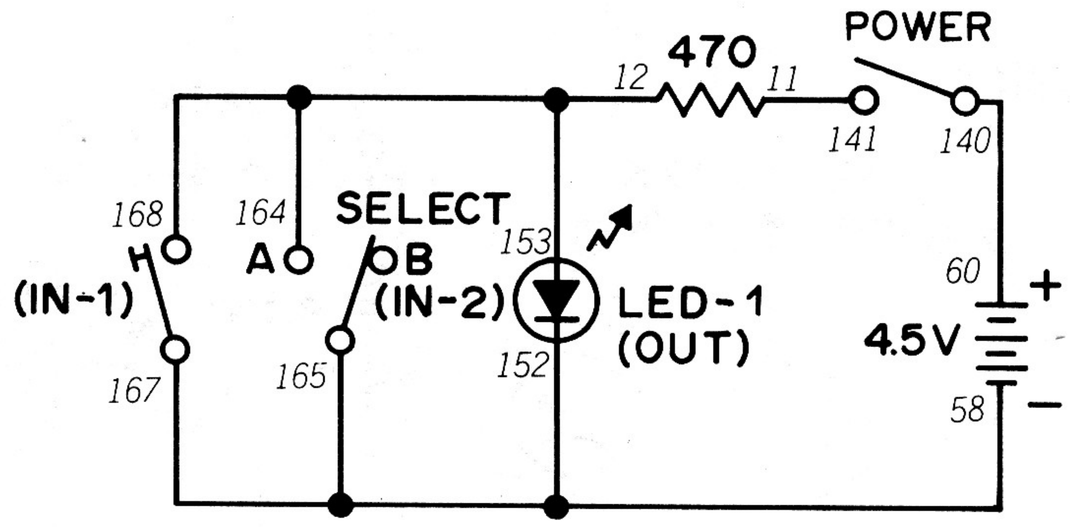

Here's another circuit that gives you a clue to how it works by its name. Think you can figure it out? Try and see how close you come!

As you build this Project, make sure the Select Switch is set to B. Turn the Power Switch to ON. What does LED 1 do? Now press the Key. Is there any change in LED 1? Release the Key and set the Select Switch to A. What happens now? Now press the Key again while the Select Switch is at A. Is there any change in LED 1?

As you can see, *a NOR gate does the opposite of what an OR gate does.* A NOR gate normally has an output (or, as electronics engineers like to say, it's at 1). But whenever one or both inputs are activated, the output goes off (or becomes 0).

Now think a second ... what does this NOR gate remind you of?

We hope you said Project 63, where we met the inverter circuit. You can see that a NOR gate is really an inverter circuit with more than one input. If all of the inputs are 0, the output is 1. But if any of the inputs are 1, then the output becomes 0!

Where'd you suppose they came up with this name from? How about "not" "or" (or in other words an inverted OR).

Can you think of how NOR circuits could be used in electronic devices?

NOTES

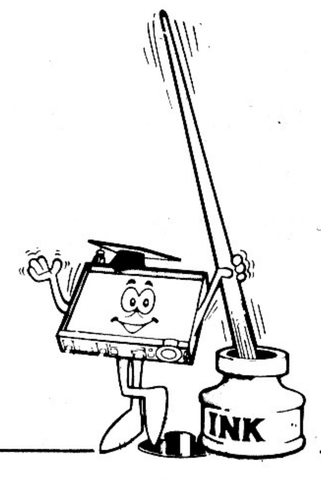

Wiring Sequence

11-141, 12-153-164-168, 58-167-165-152, 60-140

67. MEET THE NAND GATE

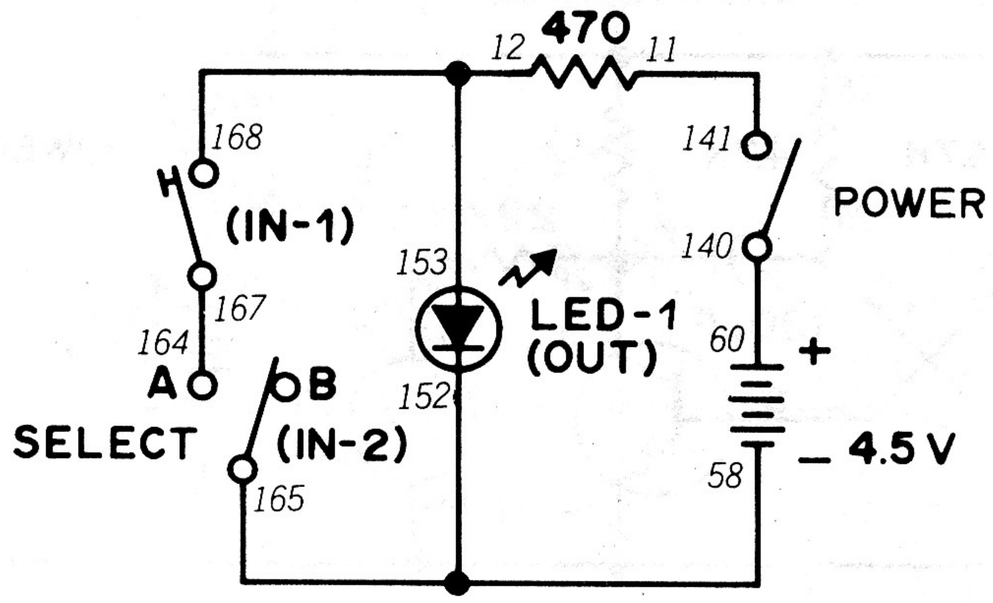

Were you able to figure out what a NOR gate did by its name? If so, it ought to be a cinch to guess how a NAND gate works. Make a mental note of how you think it works before building this Project.

While you're making the wiring connections, set the Select Switch to B. When you've built this Project, turn the Control Knob clockwise to switch power ON. What does LED 1 do? Now set the Select Switch to A. Any change in LED 1? Now press the Key while the Select Switch is at A. Anything different now?

As you probably suspected, a NAND gate turns off its output when all of its inputs are on. Or—to use some fancy electronic engineer's talk—the output of a NAND gate goes to 0 when **all** inputs are at 1. And you can also see that this is another type of inverter circuit.

Now look carefully at the Parts Board of your Kit ... notice the Integrated Circuit labeled "Quad 2-Input NAND?" What do you suppose that means? Do you think there's a NAND gate (or maybe several NAND gates) inside that tiny little part? Make notes of what you think ... you'll have fun looking back on them after some future Projects!

NOTES

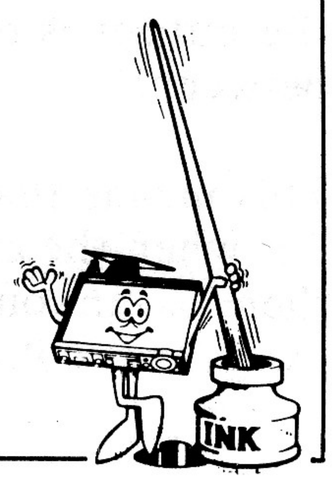

Wiring Sequence

11-141, 12-153-168, 58-165-152, 60-140, 164-167

68. HOW A MULTIVIBRATOR WORKS

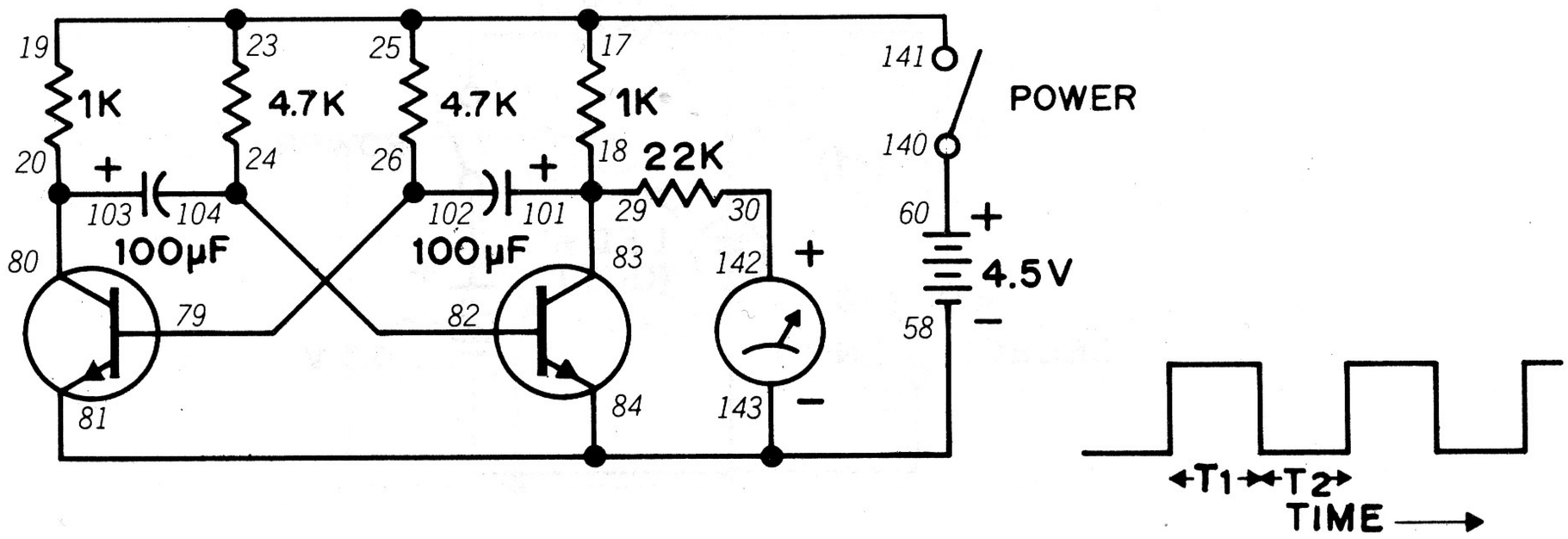

'Way back in Project 2 we first saw a multivibrator circuit in action. Check the notes you made for that Project ... we're now going to see how close you came to the right answer.

After you finish the wiring connections, set the Control Knob to ON. Look at the Meter—what's happening?

You see the Meter pointer rise quickly up, stay at a certain position and then quickly drop down. The Meter pointer stays at 0 for a few moments, and then the cycle repeats itself.

This type of output is called a **square wave**. Can you imagine how it got this name? (Hint: think of how a square looks ... straight sides, a flat top ... and now think of how the Meter pointer moves.)

Look carefully at this Project's schematic. You can see that it's a type of oscillator. But notice that the output is either on or it's off ... there's no "in between!"

This means that a multivibrator is a digital circuit. 0 is when the circuit has no output while 1 is when there is an output. Knowing this, can you now explain why Project 2 works like it does?

You can see that it's possible to control the operation of OR, AND, NOR and NAND gates using a multivibrator circuit. You can also make a multivibrator operate at a different rate ... try substituting 2.2K or 10K resistors in place of the 4.7K resistors used and see what happens.

NOTES

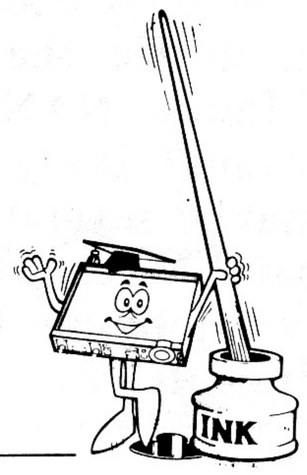

Wiring Sequence

23-25-17-19-141, 18-29-83-101, 20-80-103, 24-82-104, 26-79-102, 30-142, 58-84-81-143, 60-140

69. A "ONE SHOT" MULTIVIBRATOR

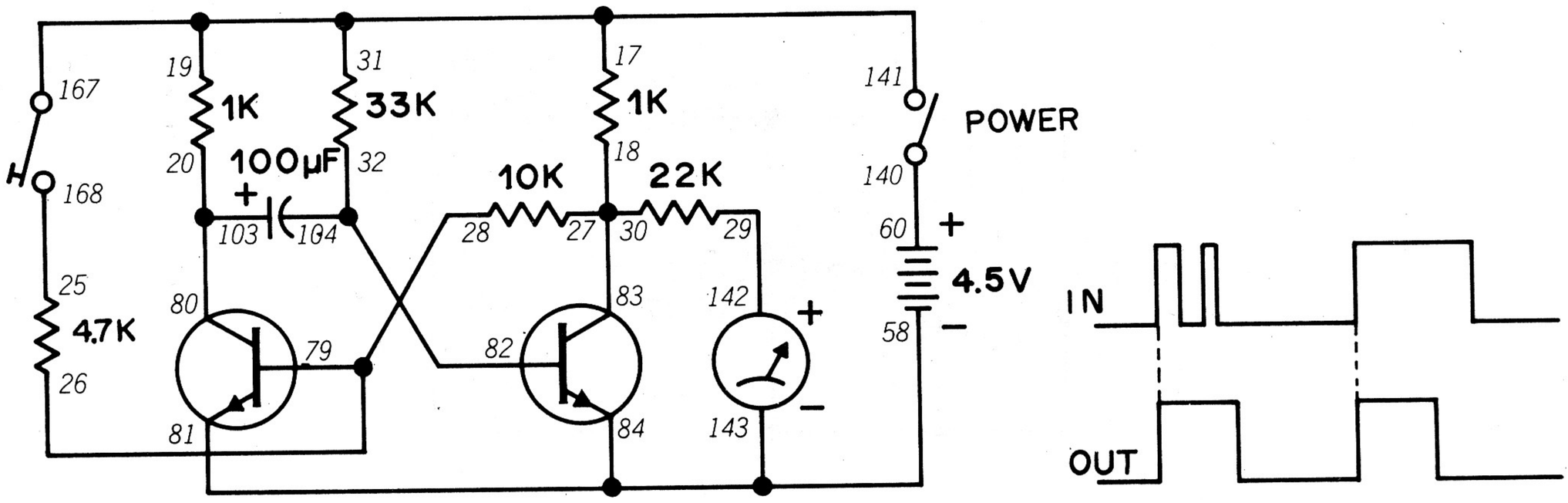

Does the name of this circuit give you any hint as to how it operates? Make a mental note of how you think it will work so you can compare it with the results of this Project.

After making all the wiring connections, turn the Control Knob to ON. Now press and release the Key. Watch the Meter ... and continue to watch it for a few seconds. What happens?

Did you guess that the multivibrator would work just once ("fire one shot")? As you just saw, you were close ... the multivibrator operates for a few moments and then stops. We might say this circuit makes "one shot" of pulses and then shuts off.

Try holding the Key down for different lengths of time and compare it to how long the circuit operates ... can you make the circuit work longer by holding the Key down for longer periods ?

You found that you couldn't change how long the circuit operated. Do you have any idea why this is so by looking at the schematic? (No fair peeking at the answer.)

The difference in this multivibrator is the action of the 100 μF capacitor. As you now know, this capacitor will discharge to keep the circuit operating. Once it is completely discharged, circuit operation stops. And there's only so much current the capacitor can store, no matter how long you hold the Key down!

NOTES

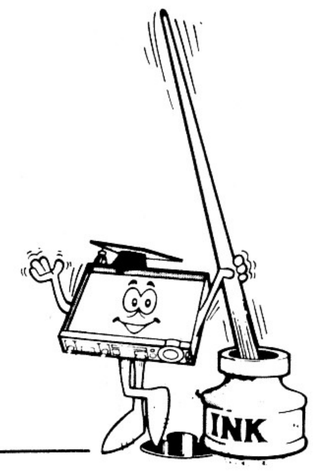

Wiring Sequence

18-27-30-83, 20-80-103, 25-168, 26-28-79, 29-142, 31-17-19-141-167, 32-82-104, 58-84-81-143, 60-140

70. AN R-S FLIP-FLOP

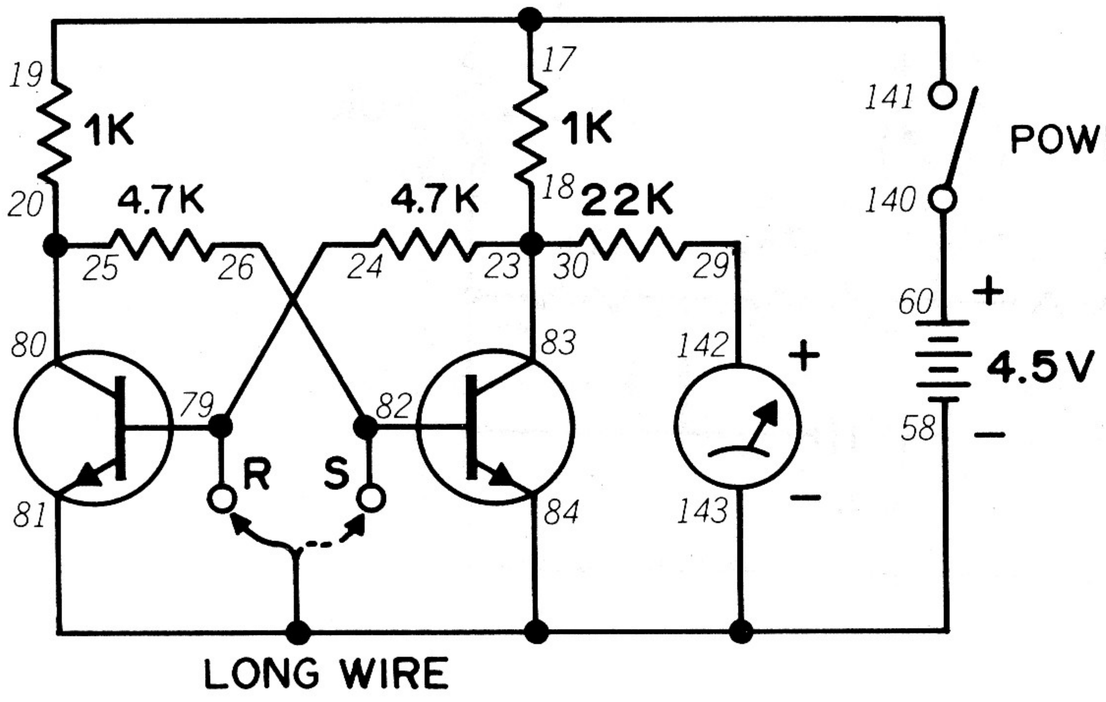

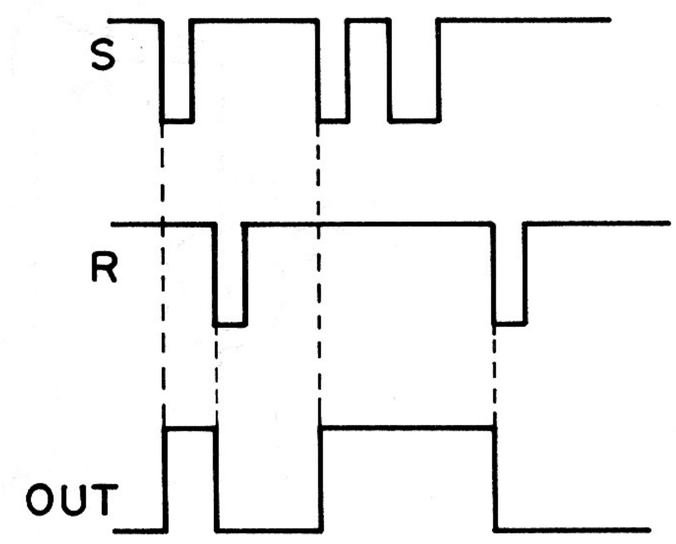

In earlier Projects we've used a "flip-flop" Integrated Circuit. We asked you back then to guess what a "flip-flop" circuit does—now we're going to find out.

After you wire this Project, turn the Control Knob to ON. Look at the Meter ... is anything happening? Now touch terminal 79 with the exposed end of the wire. Is there any change? Now touch terminal 82—what does the Meter do now? Now touch terminal 79 and see what happens.

This Project shows how a "flip-flop" circuit gets its name. It has two states: off and on (or 0 and 1) and keeps that state until you change it. If the circuit is on (or 1), the circuit is said to be *set*. If the circuit is off (or 0), the circuit is said to be *reset*. (And that's where we get the R-S part of this Project's name.)

Remember back in Project 52 when we saw how a circuit can "memorize" things? This Project is an all-electronic version. It will always stay off or on (0 or 1) until it's set or reset. This is the same way computers are able to "remember" things.

Your Kit has a part called a "Dual J-K Flip-Flop." What do you think is different about this part and this circuit? Be sure to make a note about your guess.

(Oh ... why do we call it a "flip-flop"? Because it flips on and flops back off. *Sorry about that!*)

NOTES

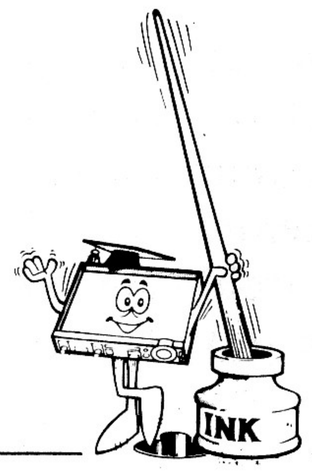

Wiring Sequence

17-19-141, 18-23-30-83, 20-25-80, 24-79, 26-82, 29-142, 58-84-81-143-LONG WIRE, 60-140

71. SOUND SCOOPER

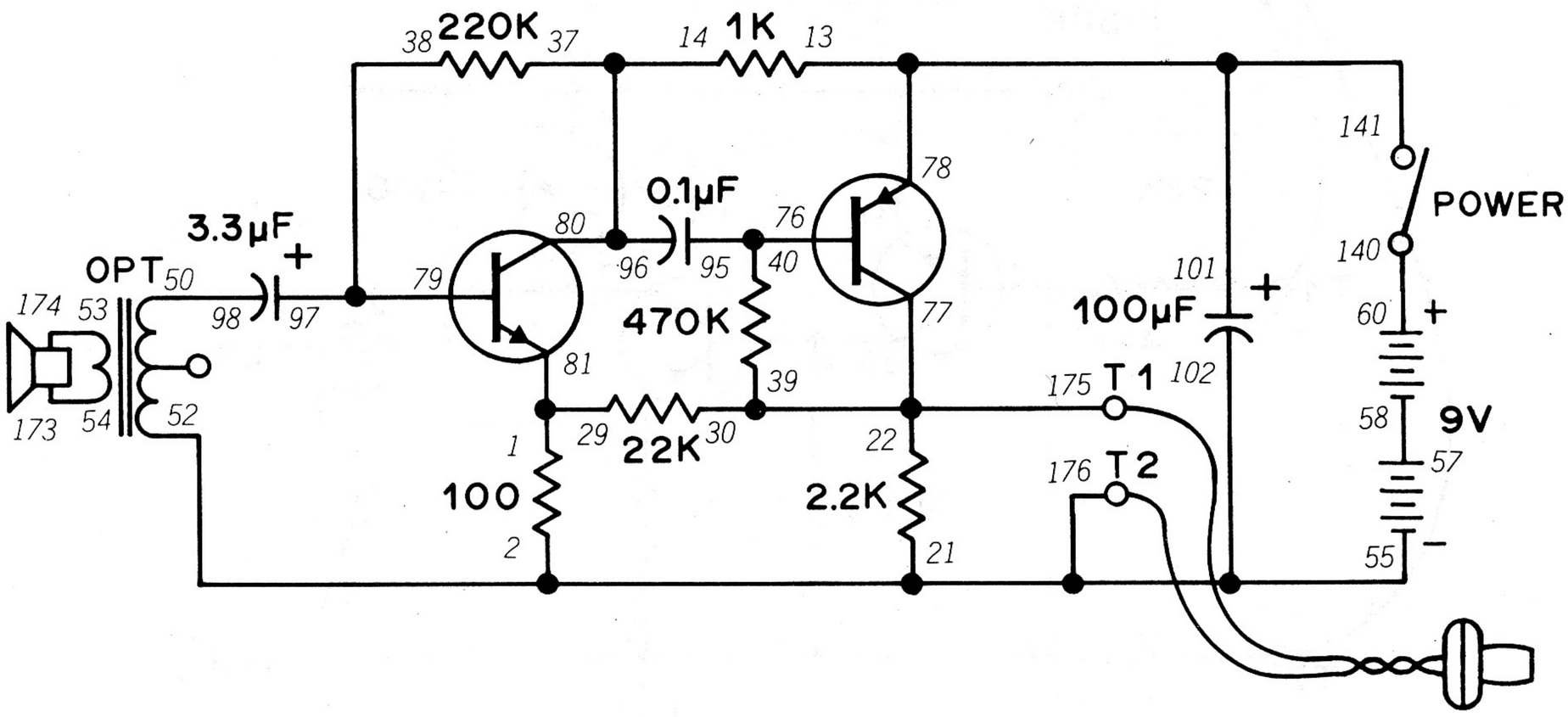

Here's a different sort of amplifier: you listen through the Earphone to sounds being input through the Speaker.

After you finish wiring this Project, connect the Earphone to Terminals 1 and 2. Turn the Control Knob to ON and try rubbing your fingers across the front of the Speaker. Now try tapping the front of the Speaker. What do you hear?

Normally a speaker doesn't make a very good microphone. But in this circuit we have enough amplification to make up for this. Notice that we use two transistors in this Project for increased amplification.

We know how a Speaker works, but did you ever figure out how the Earphone works like we asked you back in Project 60 ? Here's the story: we said it was a crystal earphone. It really has a piece of crystal in it. When electric current passes through the crystal, it vibrates and causes sound waves you can hear.

But we've used the Earphone as a microphone in some Projects. This is because the crystal will give off weak electric currents whenever sound waves strike it. This relation between an electric current and a crystal is called *piezoelectricity* (it's easier to understand than it is to say).

NOTES

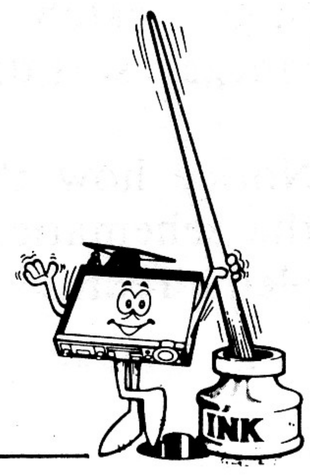

Wiring Sequence

1-29-81, 2-21-102-52-55-176, 13-78-141-101, 14-37-80-96, 22-30-39-77-175, 38-79-97, 40-76-95, 50-98, 53-174, 54-173, 57-58, 60-140, T1—EARPHONE – T2

72. LIQUID CONDUCTIVITY TESTER

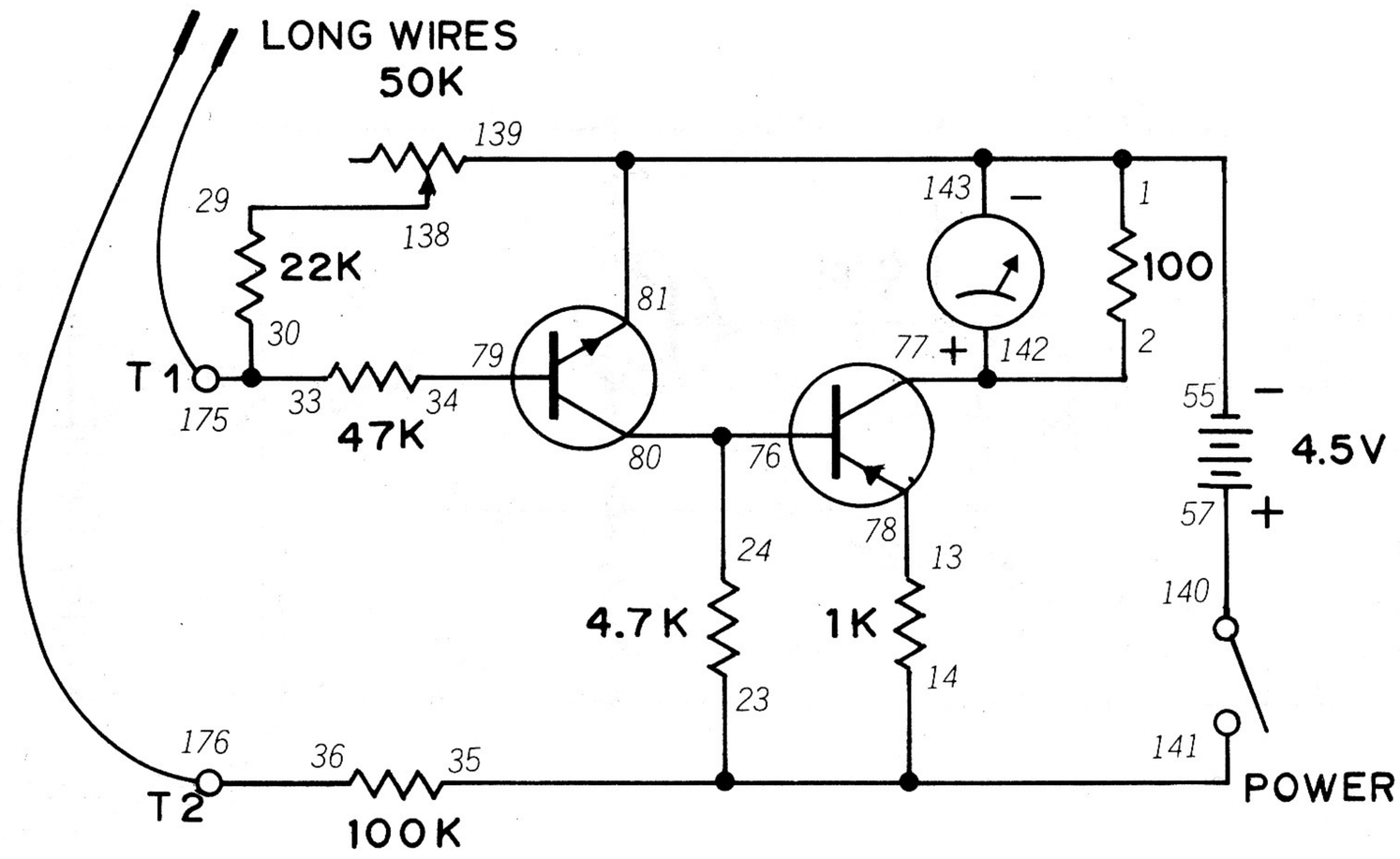

Back in Project 4, we found out how to test how well salt and fresh water could conduct electricity. This Project is a deluxe conductivity tester for liquids.

To use this Project, simply place the exposed metal ends of the two long wires in a liquid. Turn the Control Knob to ON and adjust it until the Meter pointer is about halfway up the scale. Note carefully where the pointer is. Remove the two long wires from the liquid and wipe the exposed ends dry. Make sure you have all of the liquid removed.

Now dip the ends of the long wires into a second liquid. Make sure you have the two ends spaced the same distance apart as in the first liquid. Read the Meter pointer now. The higher the reading, the better the liquid can conduct electricity. Try this on some common liquids found in your home—but avoid chemicals, cleaning fluids or liquids which might catch fire. Try such common things as vinegar, soft drinks, soapy water, cooking oil, etc.

Notice how the two transistors are connected in the schematic. This is called a **2-stage direct coupled circuit**.

Keep a record of the liquids you test. Which ones conduct electricity best? You can also use this Project to test solids for conductivity.

NOTES

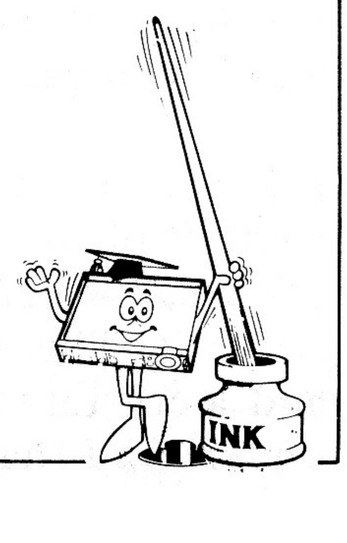

Wiring Sequence

2-142-77, 13-78, 14-23-35-141, 24-76-80, 29-138, 33-30-175, 34-79, 36-176, 55-1-139-143-81, 57-140, T1-LONG WIRE, T2-LONG WIRE.

73. SUPER-SENSITIVE PHOTOMETER

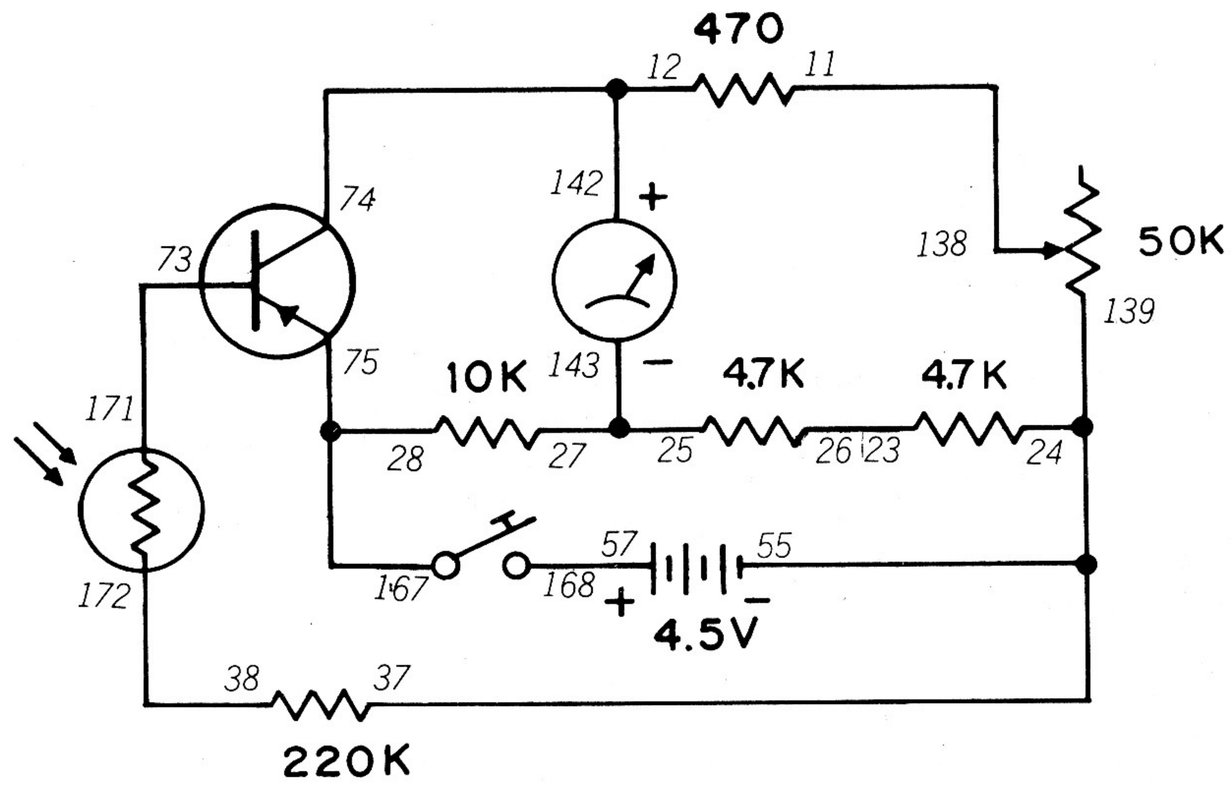

We saw in Project 48 how we can use the CdS Cell to measure how bright a light is. Sometimes we might want to measure very faint light (such as from the moon or stars) and the circuit in Project 48 just isn't sensitive enough. Amplifiers are useful for amplifying things other than sound—as we'll see in this Project.

You'll see why we call this a "supersensitive" photometer as soon as you finish building it. Let light fall on the CdS Cell and press the Key. You can see the Meter pointer move. Set the Control Knob to adjust the sensitivity of this circuit.

You can see how this Project works by examining the schematic. What does the CdS Cell do? (No fair peeking at the answer.)

By now this should be easy for you! The CdS Cell is in the emitter-to-base circuit, and this controls the transistor's operation!

Now look at the schematic again. How do you think you could increase the sensitivity of this circuit? Got any ideas? Okay, here's a hint ... remove the 220K resistor from the emitter-to-base circuit and see what happens. *(Remember to keep notes of your results....)*

NOTES

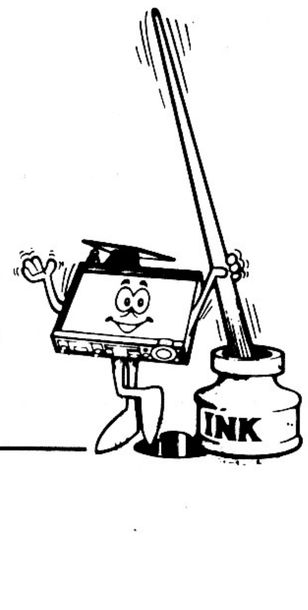

Wiring Sequence

11-138, 12-74-142, 23-26, 25-27-143, 28-75-167, 38-172, 55-37-24-139, 57-168, 73-171.

74. MOTION DETECTOR

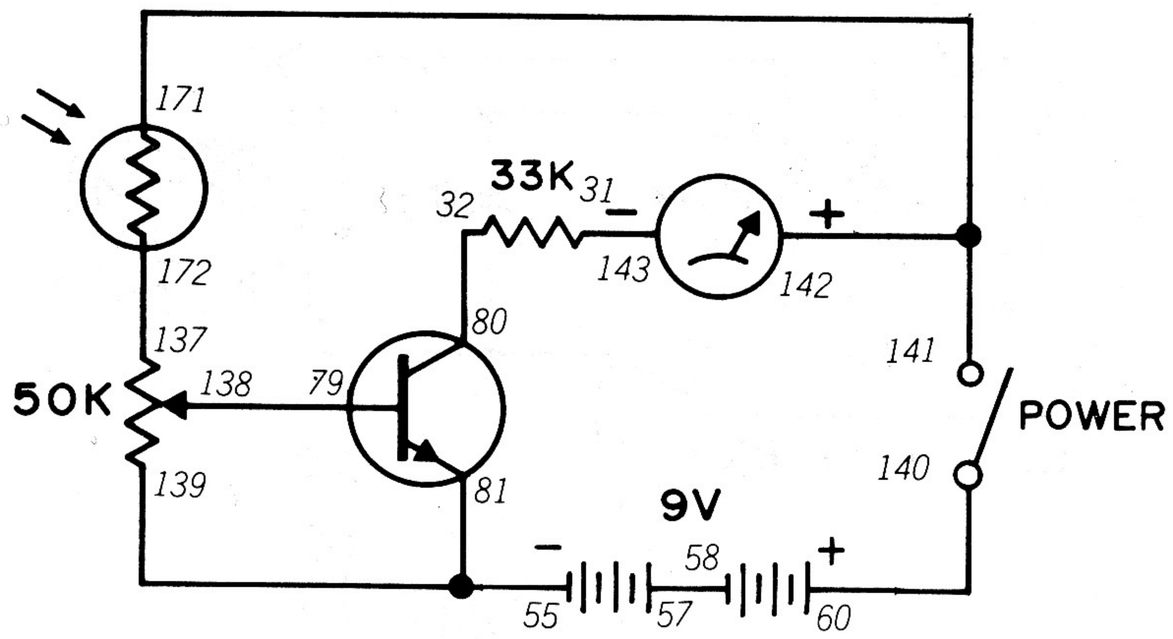

In our last Project, we saw how amplifiers can let us measure very weak light levels. But there's another interesting application for circuits of this type, as we'll see in this Project.

You'll need a flashlight and a dark room for this Project. Now take your Kit to a dark room along with a flashlight. Turn the Control Knob to ON and shine the flashlight directly at the CdS Cell. Now move your hand in front of the flashlight beam and see what happens to the Meter. Try adjusting the Control for different results.

This is an example of a motion detector. These are often used in banks, defense plants, military bases and other areas where only certain poeple are admitted. This lets us detect intruders without the intruders being aware of it. The beam of light is usually located so that the intruder can't easily see it (for example, it may be only a few inches off the floor). Sometimes we use light invisible to the human eye, such as infrared, to make sure the intruder doesn't know about the motion detector.

Try using this detector in a normal room. Does it work?

NOTES

Wiring Sequence

31-143, 32-80, 55-81-139, 57-58, 60-140, 79-138, 137-172, 141-142-171.

75. TWO-TONE BUZZER

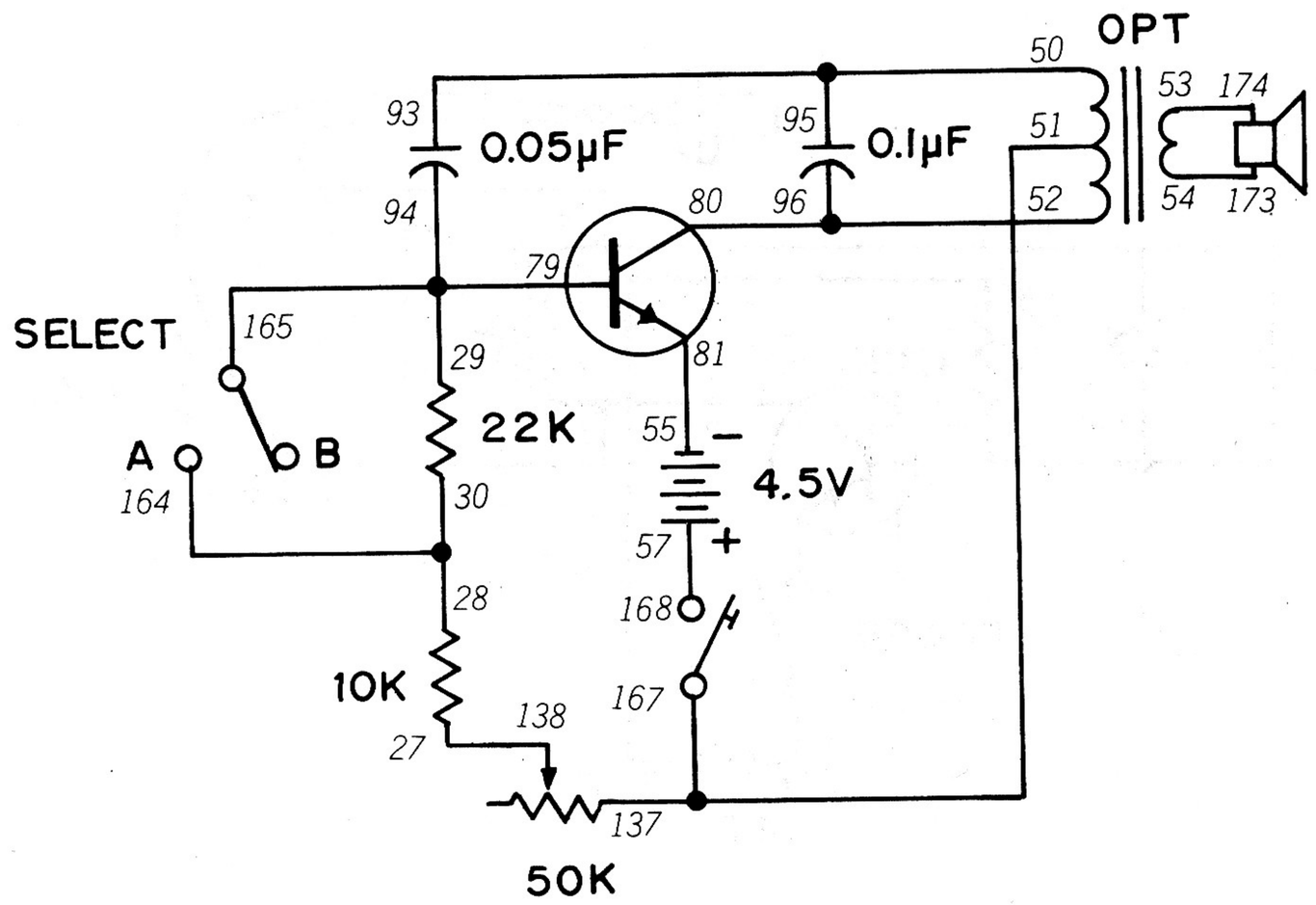

No, this Project doesn't have two different colors of paint! It's an electronic buzzer whose tone you can change at a flip of the switch.

As you wire this Project, set the Select Switch to A. Press the Key, and you'll hear a tone from the Speaker. Now set the Select Switch to B—what does the tone sound like now? Look at the schematic—can you see why this happens? (Don't peek at the answer before you figure it out!)

Yep—the answer involves the emitter-to-base current! With the Select Switch at A, the 22K resistor isn't in the emitter-to-base circuit. At B, it's added in series to the 10K resistor and the 50K variable resistor. You can see the effects of a different resistance on the emitter-to-base circuit by adjusting the 50K Control.

So what effect do you think increasing the resistance in the emitter–to–base circuit has on an oscillator circuit like this? (Be sure to keep a record of your answer.)

NOTES

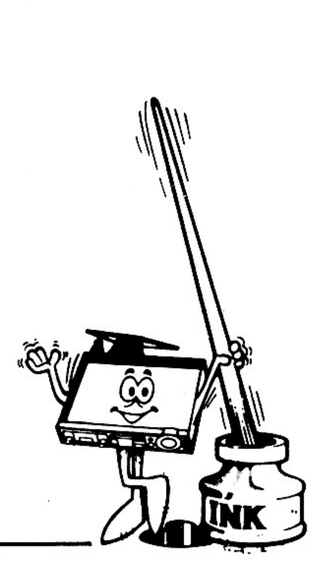

Wiring Sequence

27-138, 28-30-164, 29-79-94-165, 50-93-95, 51-167-137, 52-80-96, 53-174, 54-173, 55-81, 57-168.

76. VARIABLE CAPACITOR OSCILLATOR

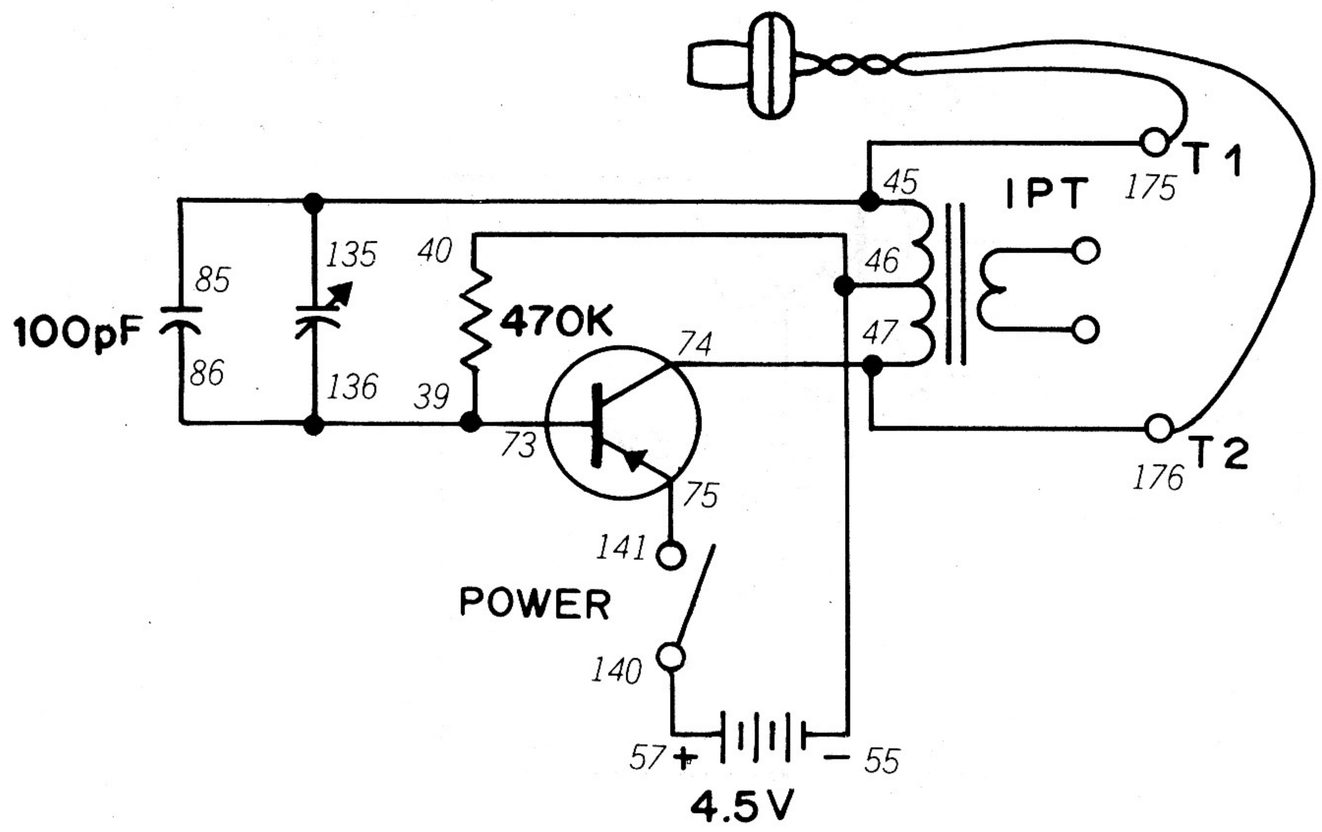

You might (*and you should!*) remember from some earlier Projects that you can also control the operation of an oscillator by using different capacitor values. This Project uses a variable capacitor to prove it.

After you build the circuit, connect the Earphone to Terminals 1 and 2 on the front panel of your Kit. Turn the Control Knob to ON and listen through the Earphone. You'll hear a tone. Now adjust the Tuning knob to different positions. What do you hear now?

You heard the tone change in pitch from a high frequency to a low frequency (or from low to high frequency). Can you guess why this happens? If you can't quite figure out the answer, look back at Projects 36 and 37 along with the notes you made for those two Projects. *(See, aren't you glad you kept those notes like we asked you?)*

NOTES

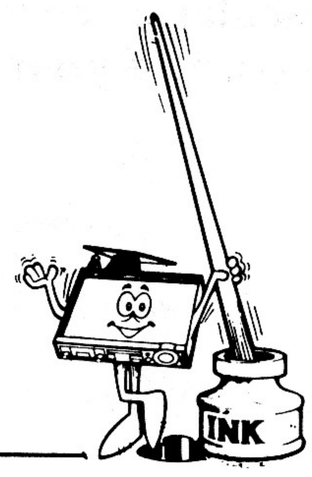

Wiring Sequence

39-73-86-136, 40-46-55, 57-140, 74-47-176, 75-141, 135-85-45-175, T1 – EARPHONE – T2

77. VARIABLE R-C OSCILLATOR

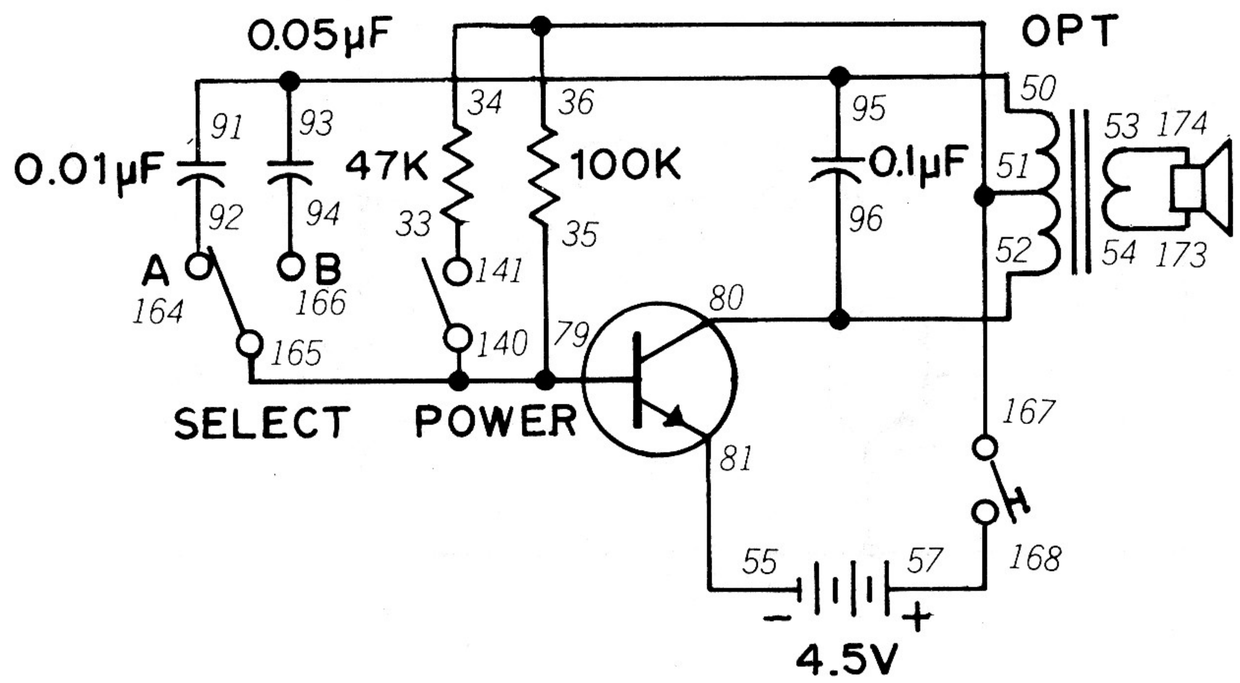

The "R-C" in this Project's name stands for "resistance-capacitance." We've seen how just varying resistance or capacitance can affect oscillator operation ... this Project lets us see the effects when we change both.

Look at the schematic for this Project. You'll see that the Select Switch chooses between two different capacitors. And you can also see that turning the Control Knob clockwise (to ON) adds a second resistor to the circuit.

Set the Select Switch to B and turn the Control Knob fully counter-clockwise to OFF. Now press the Key. What kind of sound do you hear from the Speaker? Now set the Select Switch to A and press the Key again. Is there any change in the sound? Now turn the Control Knob clockwise to ON and again press the Key. Try both settings of the Select Switch while the Control Knob is set to ON and see what happens.

Which combination gives you the highest tone? The lowest? What does this tell you about how capacitors and resistors affect each other? (You might want to review Projects 38 and 39 ... *that's a hint!*)

NOTES

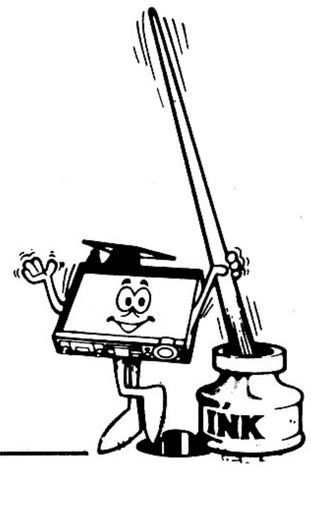

Wiring Sequence

33-141, 35-79-140-165, 36-34-51-167, 50-93-95-91, 52-80-96, 53-174, 54-173, 55-81, 57-168, 92-164, 94-166.

78. ELECTRONIC METRONOME

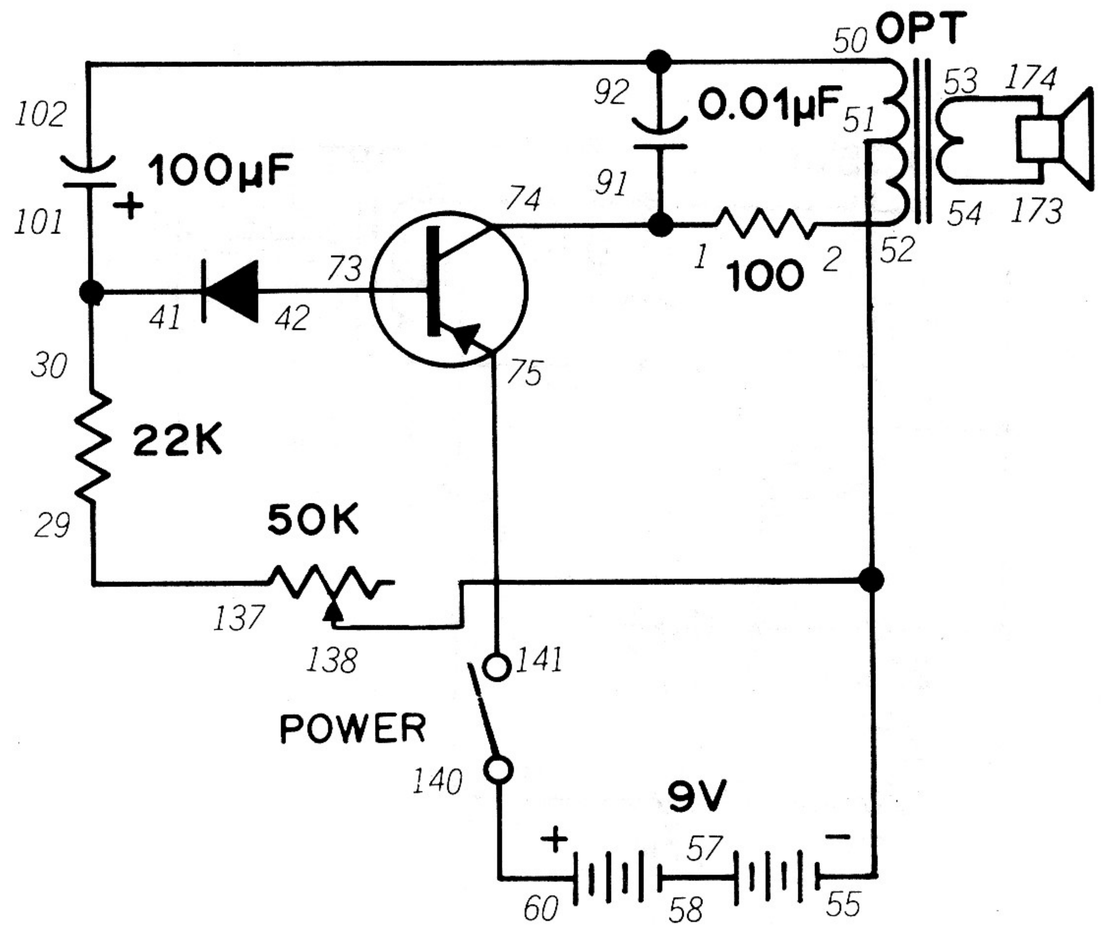

Here's a Project you might find useful if you're learning to play a musical instrument! This is an electronic version of the metronome used by music students everywhere.

Turn the Control Knob clockwise to switch power ON. You'll hear a sound from the Speaker at a fixed interval. Turn the Control Knob to the right (clockwise) and you'll hear the sounds "speed up" as the interval between sounds shortens.

The operation of this oscillator is like others we've played with. The circuit operates as the 100 μF capacitor charges and discharges, and the 50K variable resistor controls its rate. This is why you can change the "speed" of the sounds by adjusting the Control Knob.

Try a different resistor in place of the 22K in series with the Control. Also try a different Capacitor in place of the 100 μF electrolytic and see what effect this has on circuit operation. Remember to keep track of the results in your notes.

NOTES

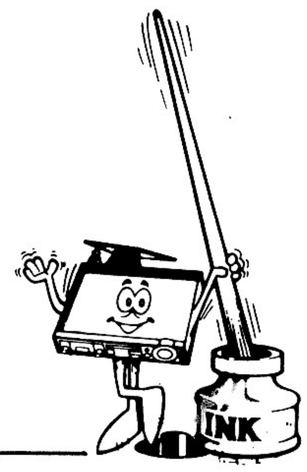

Wiring Sequence

1-74-91, 2-52, 29-137, 41-30-101, 42-73, 50-92-102, 53-174, 54-173, 55-51-138, 57-58, 60-140, 75-141

79. DOOR ALARM

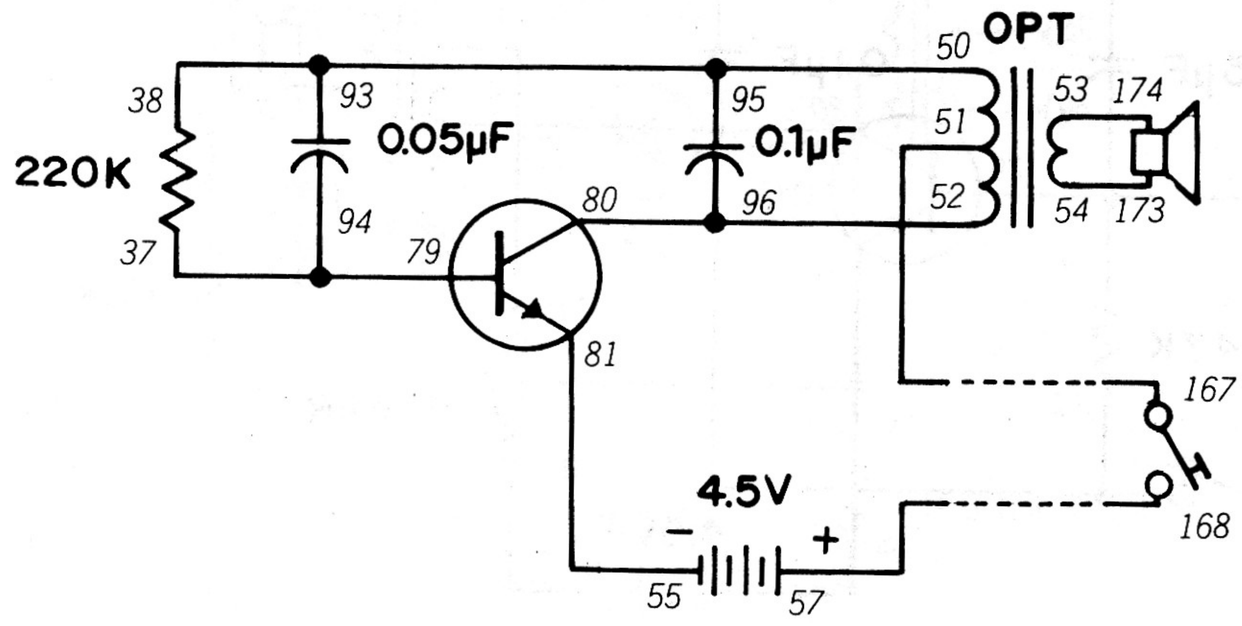

Here's a nifty buzzer circuit that makes a super alarm. This is known as a *contact* alarm for reasons you'll soon see.

As you build this Project, you'll notice that there's no switch to turn it off or on, nor is the Key used. When you finish, touch the two exposed metal ends of the long wires together. You'll hear a buzzer sound from the Speaker.

You can use this Project to let you know if something moves and causes the two long wires to make contact with each other. For best results, place the wires so that one is horizontal while the other is vertical. This way they're more likely to make contact with each other.

You can place the long wires on a door and its frame so that they make contact when the door is closed. You can use this same arrangement for desk drawers, storage chest covers, cabinets, etc. If you need longer wires, see your local Radio Shack store for extra wire.

You can also use this circuit as a Morse code practice unit by attaching the two long wires to the Key.

NOTES

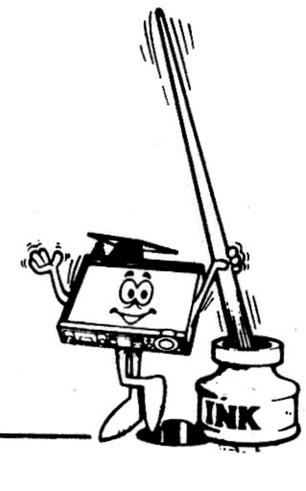

Wiring Sequence

37-79-94, 50-38-93-95, 51-LONG WIRE-167, 52-80-96, 53-174, 54-173, 55-81, 57-LONG WIRE-168

80. FREQUENCY SHIFT OSCILLATOR

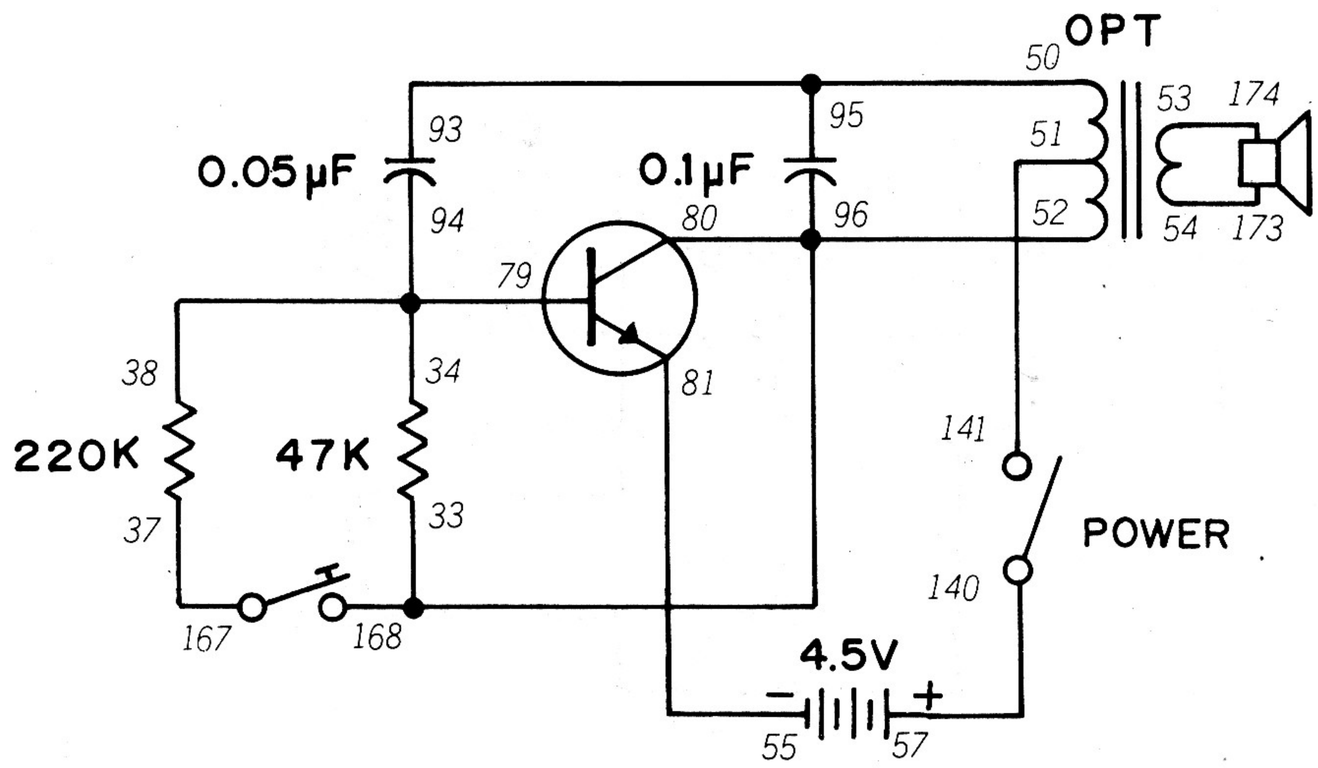

Many of the oscillators we've played with so far have used the Key to turn them on or off. This one is different ... can you tell what it does just by looking at the schematic?

When you turn the Control Knob to ON, you'll hear a tone from the Speaker. Now press the Key. What happens to the tone? Can you explain why this happens? *(C'mon! By now this should be duck soup for you!)*

When you press the Key, you add another resistor in parallel to the 47K resistor. Remember from Project 27 that connecting two resistors in parallel *decreases* the total resistance. When this happens, the tone become higher–just like you heard.

Try adding different resistors in place of the 220K value. What effect do higher and lower values have on the tone when the Key is pressed? Be sure to make notes of your results.

NOTES

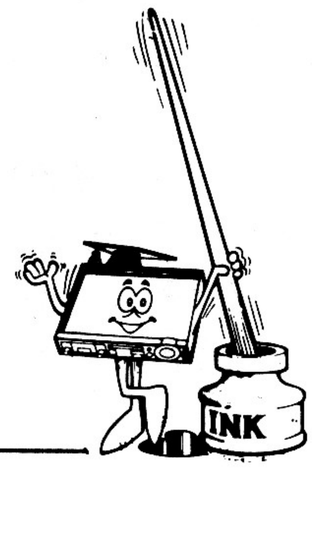

Wiring Sequence

34-38-79-94, 37-167, 50-93-95, 51-141, 52-33-80-96-168, 53-174, 54-173, 55-81, 57-140

81. CODE PRACTICE UNIT

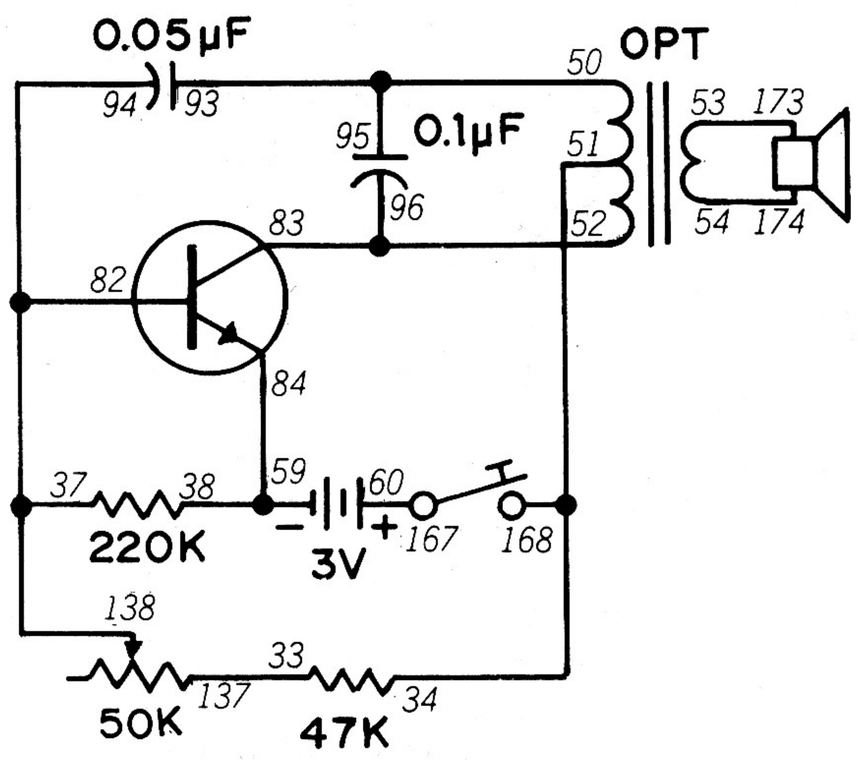

The ability to send and receive Morse code is a very useful skill to have. It's widely used in radio communications, and being able to send and receive Morse code is one of the requirements for a "ham" radio license. Here's a neat Project that will let you practice Morse code.

This circuit is a basic oscillator circuit that you've used in other Projects. When you press the Key, you'll hear a sound from the Speaker. You can adjust the tone with the Control Knob.

If you're interested in getting a "ham" radio license, your local Radio Shack has books about "ham" radio. Your school or public library will also have books on the subject (they may be listed under "amateur radio").

MORSE CODE

A	·—	U	··—
B	—···	V	···—
C	—·—·	W	·——
D	—··	X	—··—
E	·	Y	—·——
F	··—·	Z	——··
G	——·		
H	····	PERIOD	·—·—·—
I	··	COMMA	——··——
J	·———	QUESTION	··——··
K	—·—	1	·————
L	·—··	2	··———
M	——	3	···——
N	—·	4	····—
O	———	5	·····
P	·——·	6	—····
Q	——·—	7	——···
R	·—·	8	———··
S	···	9	————·
T	—	0	—————

Wiring Sequence

33-137, 34-51-168, 37-82-94-138, 38-84-59, 50-93-95, 52-83-96, 53-173, 54-174, 60-167.

82. LIGHT/SOUND CODE PRACTICE UNIT

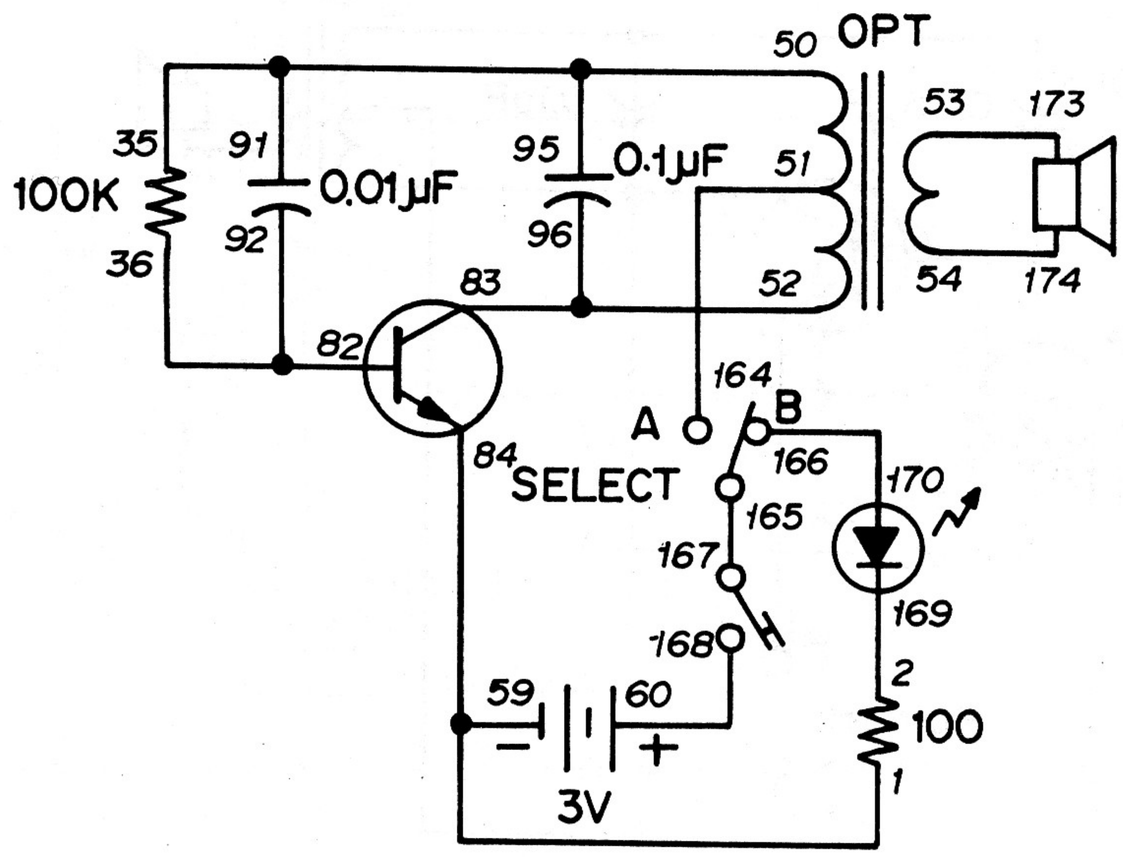

Morse code is also used for communicating with a flashing light. This circuit will let you practice Morse code using both sound and light. It's also great if the sound of the oscillator bothers others in your family.

Move the Select Switch to A and push the Key. You'll hear a sound from the Speaker. Now move the Select Switch to B and press the Key again. This time the LED lights up.

If you examine the schematic for this Project carefully, you'll notice that it seems like the circuits for Project 81 and 24 are joined together. Like we've told you all along, complex electronic devices are just simple circuits connected to each other.

MORSE CODE

A	·—	U	··—
B	—···	V	···—
C	—·—·	W	·——
D	—··	X	—··—
E	·	Y	—·——
F	··—·	Z	——··
G	——·		
H	····	PERIOD	·—·—·—
I	··	COMMA	——··——
J	·———	QUESTION	··——··
K	—·—	1	·————
L	·—··	2	··———
M	——	3	···——
N	—·	4	····—
O	———	5	·····
P	·——·	6	—····
Q	——·—	7	——···
R	·—·	8	———··
S	···	9	————·
T	—	0	—————

Wiring Sequence

1-84-59, 2-169, 36-82-92, 50-35-95-91, 51-164, 52-83-96, 53-173, 54-174, 60-168, 165-167, 166-170.

83. STROBE LIGHT

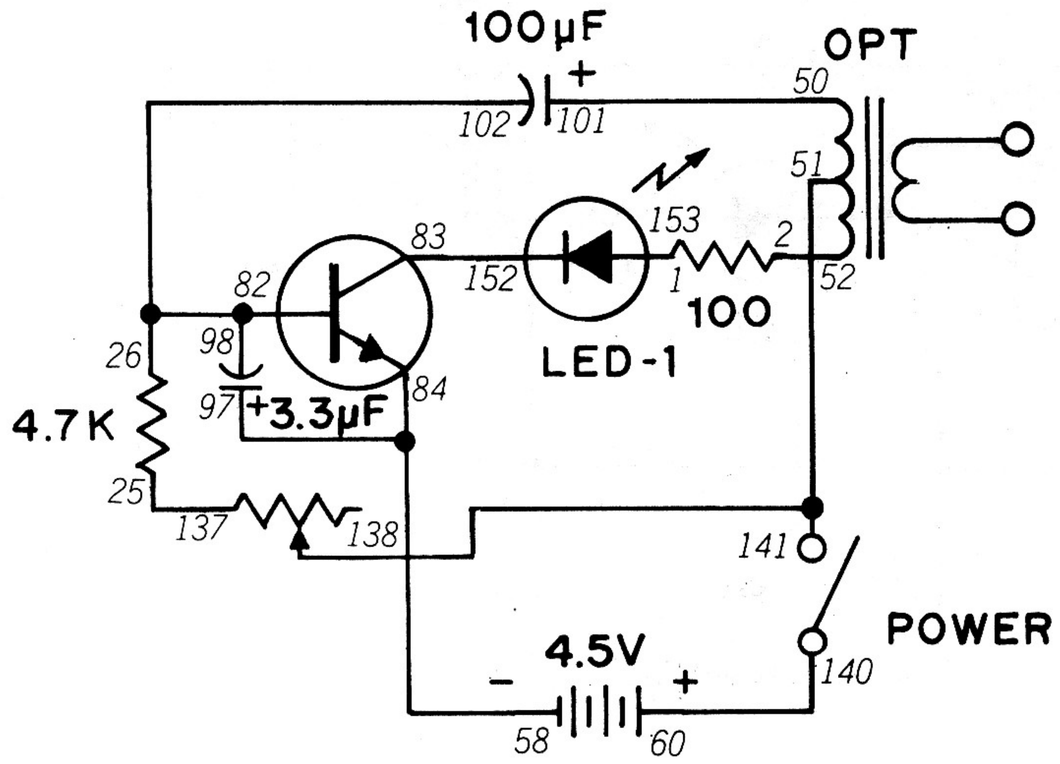

Here's an oscillator circuit that doesn't use the Speaker or Earphone—you don't hear its output. Instead, you **see** the output on a LED.

This Project will give you an idea of how large strobe lights work. Set the Control Knob to ON and watch LED 1. You'll see it light on and off at a certain interval. You can control the rate at which LED 1 "blinks" with the 50K variable resistor.

This Project lets you get a "bird's eye view" of how an oscillator works. The charging and discharging of the 100 μF capacitor controls the rate at which the LED "blinks." Try substituting a lower value capacitor and see what happens to the "blinking" rate.

This Project also shows you another advantage of LEDs over ordinary light bulbs like the Lamp in your Kit. A LED can light on and off faster than the Lamp in your Kit (we say it has a *faster response time*). LEDs also use less current, don't give off as much heat and last longer than ordinary light bulbs. That's why you see LEDs in more and more electronic devices these days.

NOTES

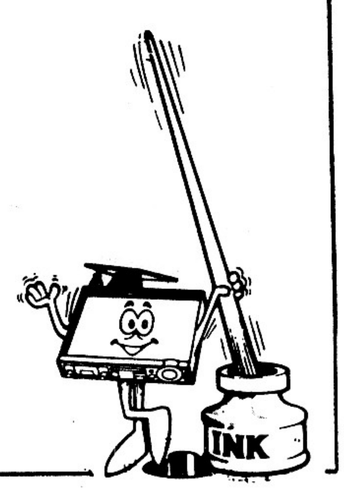

Wiring Sequence

1-153, 2-52, 25-137, 26-82-98-102, 50-101, 51-141-138, 58-84-97, 60-140, 83-152.

84. NOISY STROBE LIGHT

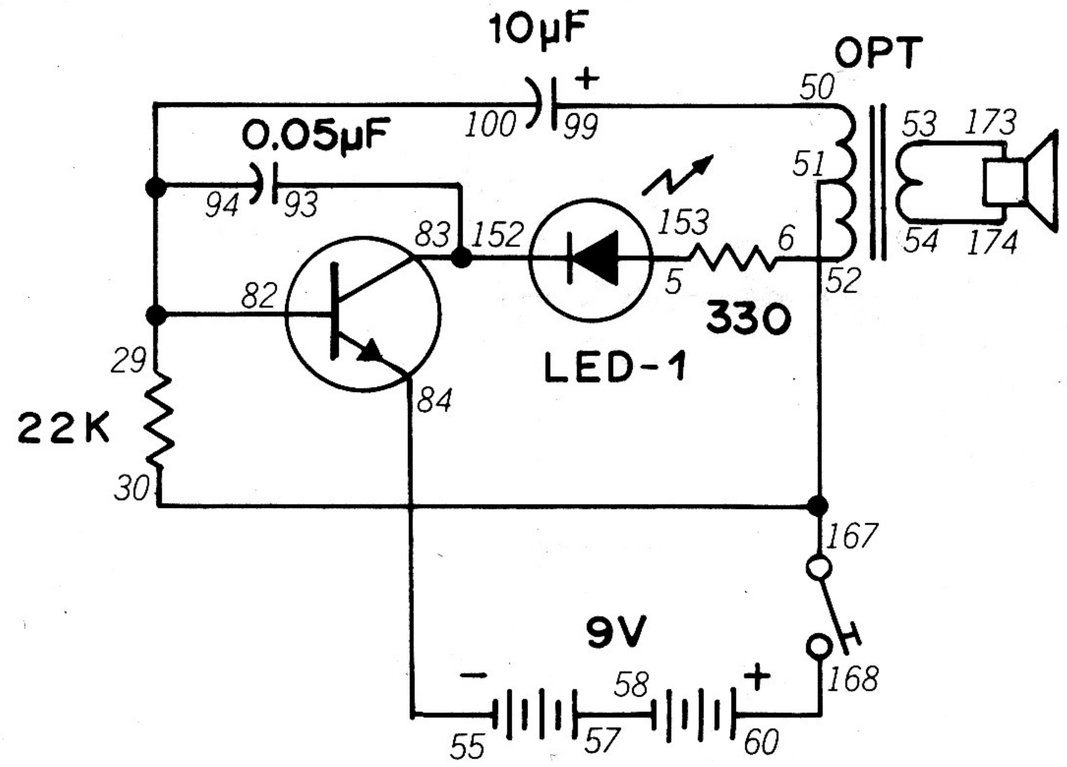

There's no reason why we can't use both a LED and the Speaker with an oscillator ... so we'll do just that in this Project.

This circuit flashes the LED and makes a sound from the Speaker each time the circuit oscillates. You'll find the sound to be similar to that of a machine gun. Just press the Key when you finish the wiring connections—you'll see *and hear.*

As you can see from the schematic, oscillation is controlled by the charging and discharging of the 10 µF capacitor. And the capacitor's charging and discharging is controlled by the 22K resistor. Look over your notes ... what effect do you think changing the values of those two parts would have on this circuit? Try it and see.

NOTES

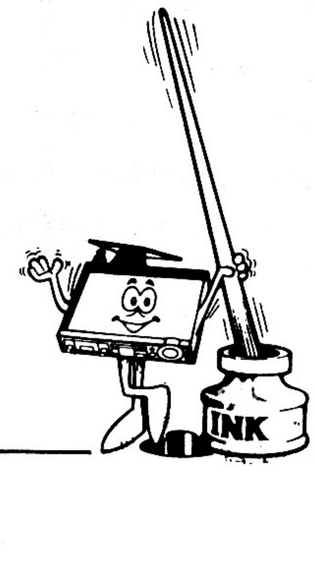

Wiring Sequence

5-153, 6-52, 29-94-100-82, 30-51-167, 50-99, 53-173, 54-174, 55-84, 57-58, 60-168, 83-93-152.

85. CdS-CONTROLLED OSCILLATOR

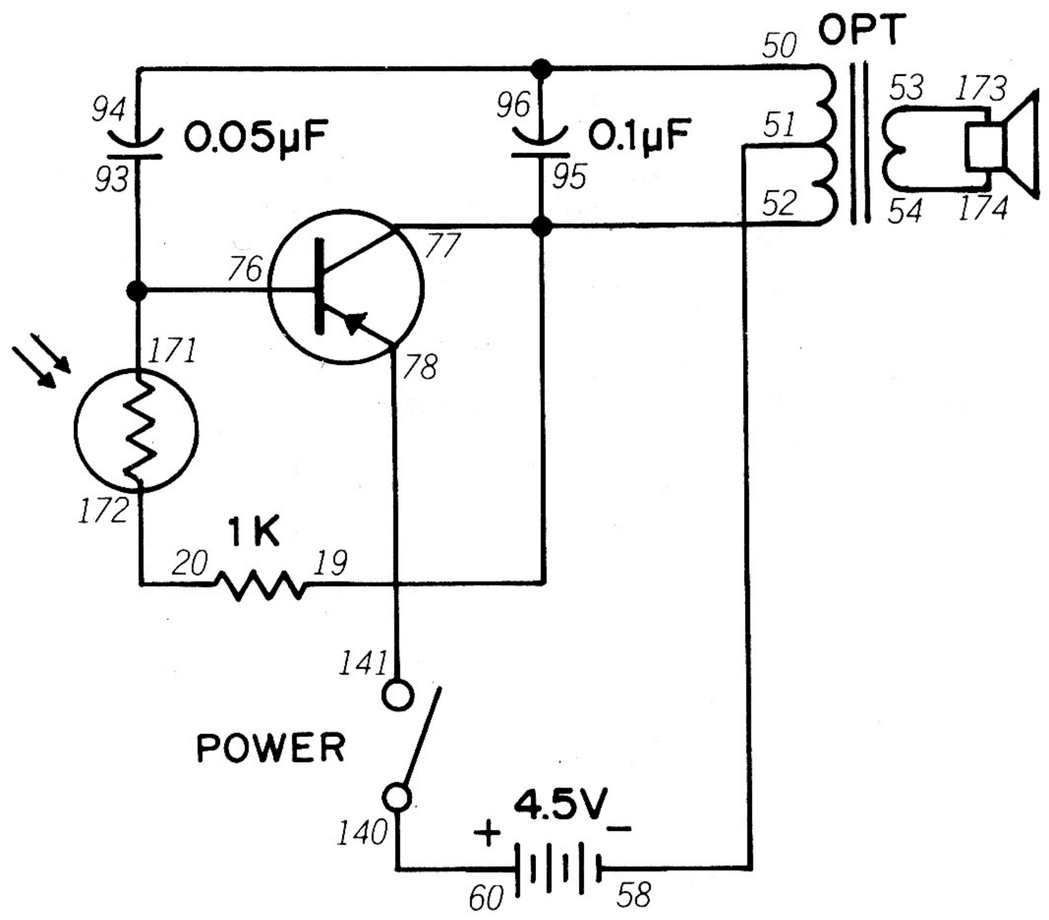

Back in Project 57, we mentioned that it might be interesting to see what happens when you let a CdS Cell control the base-to-emitter current. This Project will let you control an oscillator's operation using light.

Wire this Project and place your Kit in a well-lit room and turn the Control Knob to ON. You'll hear a tone from the Speaker. Now place your hand over the CdS Cell ... What happens to the tone? Try using this Project in a darker room and see if you get the same results. You might also want to try a different value resistor in place of the 1K one in series with the CdS Cell.

You can also use this circuit as a game. Place your Kit in a dark room and try to "shoot" the CdS Cell with a flashlight just like you did back in Project 15. Has your aim improved any since then?

NOTES

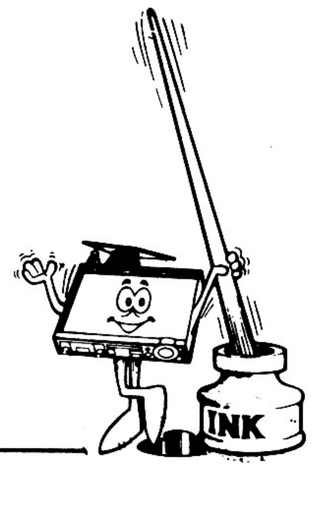

Wiring Sequence

19-95-77-52, 20-172, 50-94-96, 51-58, 53-173, 54-174, 60-140, 76-93-171, 78-141.

86. SHOT IN THE DARK II

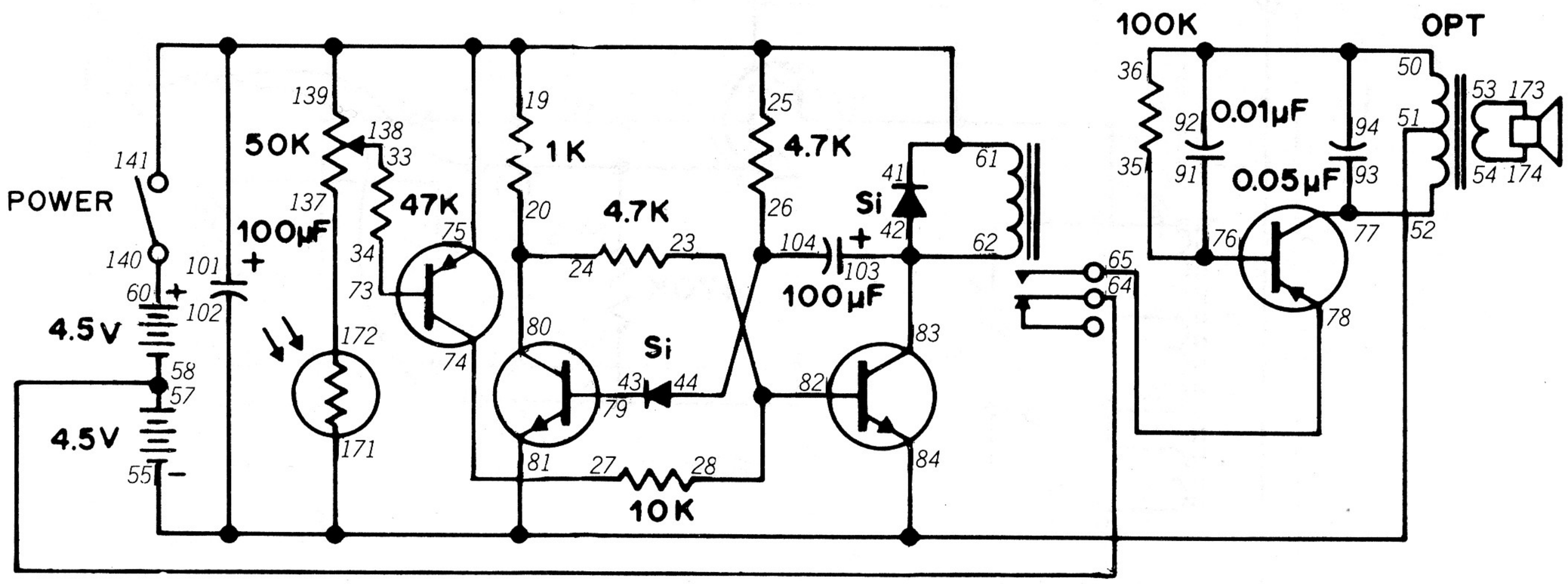

If you tried to use the last Project as a game, you might have had problems knowing exactly when you hit the CdS Cell, because the sound may have only changed slightly. This improved version solves that problem, since you only hear sound when you hit the target.

The wiring for this Project gets a little bit complicated, so take your time and check your work carefully.

You'll use this Project much like Project 15. Take your Kit to a dark room and turn the Control Knob to ON. Shining a flashlight beam on the CdS Cell, slowly turn the Knob clockwise. Stop when you hear a sound from the Speaker. Place your Kit in a convenient spot in the room. Try to hit the CdS Cell with your flashlight beam.

As we said back in Project 15, don't be too surprised if you have to adjust the Control Knob very carefully for best results. A little practice will let you find the right setting every time.

NOTES

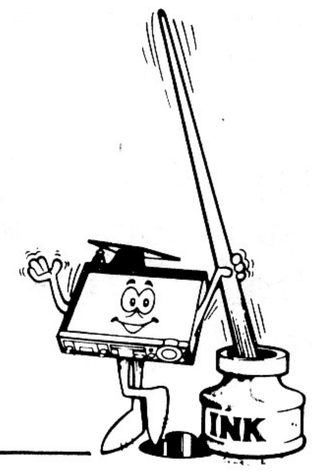

Wiring Sequence

20-24-80, 23-28-82, 26-44-104, 27-74, 33-138, 34-73, 35-76-91, 42-62-83-103, 43-79, 50-36-94-92, 52-77-93, 53-173, 54-174, 55-51-81-84-102-171, 57-58-64, 60-140, 65-78, 101-61-41-25-19-75-141-139, 137-172.

87. DOES MONEY TALK?

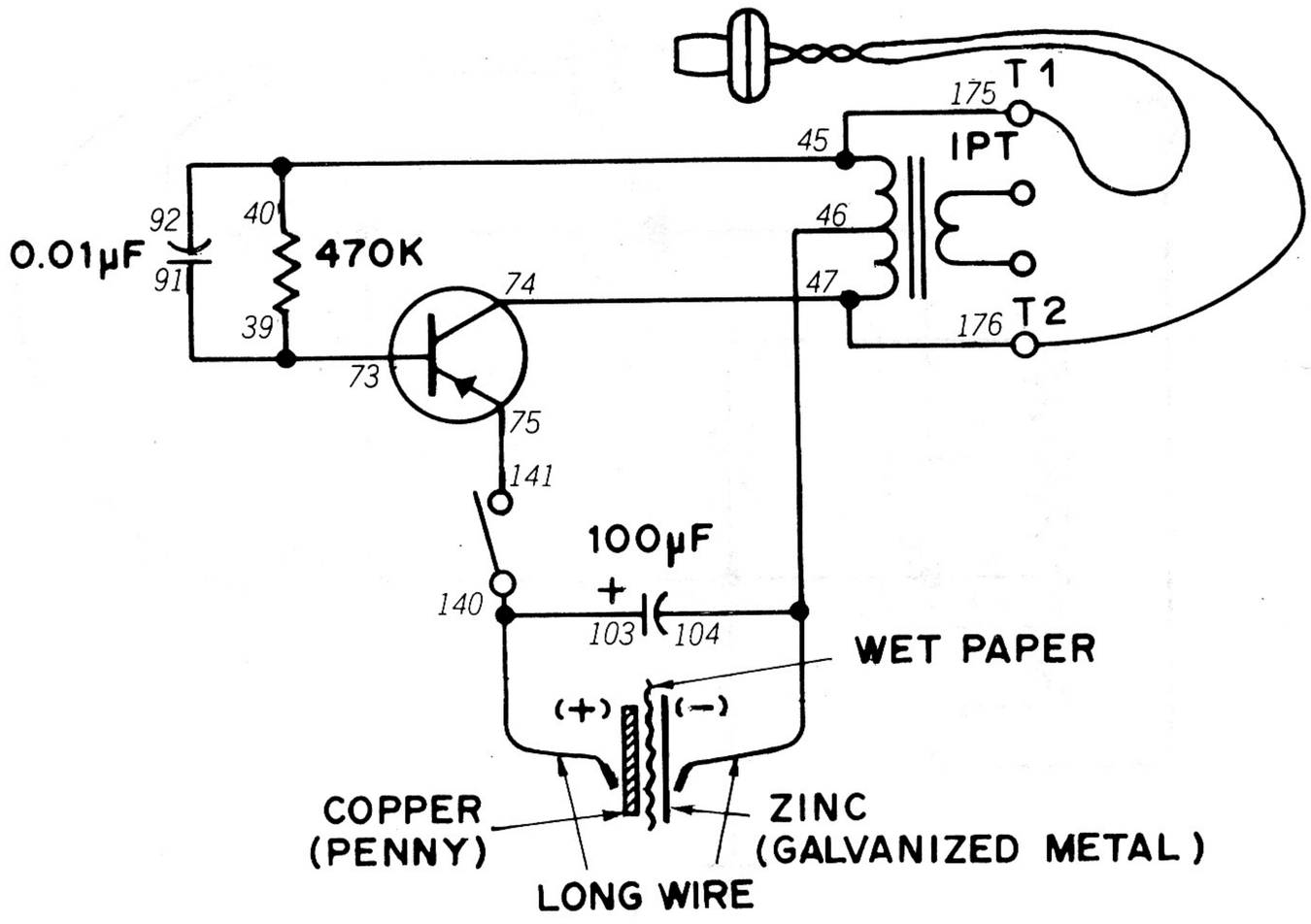

Or at least make a sound? This Project will let you see if you can turn your pocket change into a power source for an oscillator circuit.

This Project uses the same "coin battery" found in Project 59. If you were able to make the Meter pointer move in that Project, use the same "coin battery" here. Touch the penny with the long wire from terminal 103 and the other coin with the long wire from terminal 104. Connect the Earphone to Terminals 1 and 2 and set the Control Knob to ON. Do you hear a sound through your Earphone? You may have to listen quite carefully, since the sound will probably be quite weak.

Try various things with the penny to see if you can generate an electric current ... steel or iron washers, strips of various metals, etc. Also try stacking several layers of metal and electrolyte together as we suggested in Project 59.

To be sure this circuit operates properly, do the following:

1. Polish the surfaces of both sides of the coins before using.
2. Use only a single sheet of thin tissue paper.
3. If you can't hear a sound, try salt water instead.
4. Try to make as much contact as possible between the wire ends and the surfaces of the coins.
5. For the zinc metal, you can always try a piece of the inside of a tin can **(take care that you don't cut yourself on the metal).**

NOTES

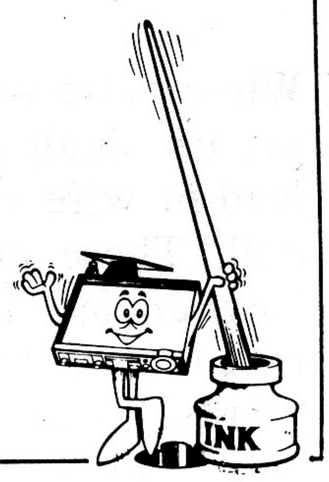

Wiring Sequence

39-73-91, 45-40-92-175, 74-47-176, 75-141, 46-104-LONG WIRE, 140-103-LONG WIRE, T1 - EARPHONE - T2.

88. "CRYSTAL SET" RADIO

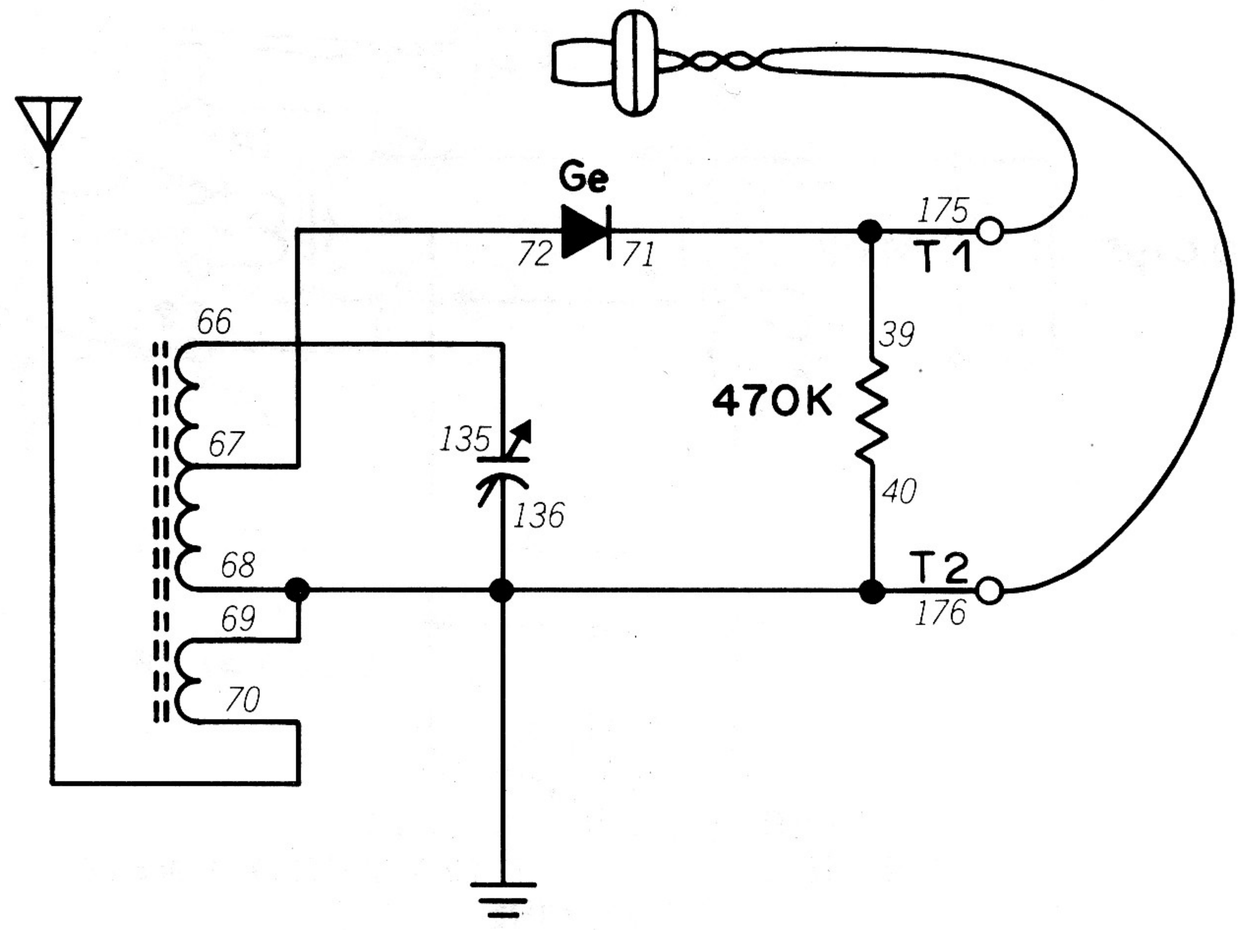

Back in the early days of radio, **crystal sets** were widely used (your grandparents might remember them). This Project is a more up-to-date version of the classic crystal set.

Before using this Project, you'll need to have an outdoor antenna erected. Your local Radio Shack has an outdoor antenna kit (catalog number 278-758) which will give excellent results. **Be sure to have an adult help you put up the antenna!**

You'll also need a ground connection. You can run an insulated wire to a cold water pipe or to a ground rod such as Radio Shack catalog number 15-530. Have an adult help you make the ground connection.

Notice something funny about the schematic for this circuit? No, we haven't forgotten the Batteries —This circuit doesn't use any. *The power for this Project is supplied by the radio signal itself!*

When radio waves strike the outdoor antenna, they set up small electric currents in the antenna. The lead-in wire carries these currents to the antenna coil. These currents are AC and are at different frequencies. The Tuning control selects one set of frequencies (remember how a variable capacitor works?) and passes the current on to the diode. The diode (*as you should remember!*) rectifies AC into DC. You hear the results of all this in the Earphone.

This Project will let you tune stations on the AM broadcasting band. Adjust the Tuning control to find the station you want to hear. Don't be too surprised if all you can hear is one loud local station with this circuit. And if you live several miles from the nearest AM station you may not be able to hear any stations. Be sure to use an outdoor antenna for best results.

NOTES

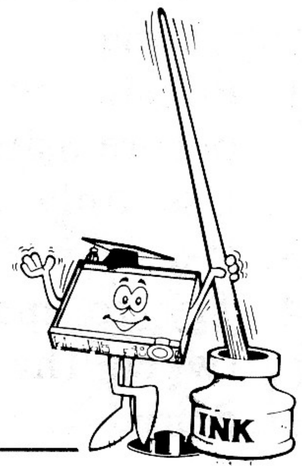

Wiring Sequence

66-135, 67-72, 71-39-175, 136-69-68-40-176-GROUND, ANTENNA-66, 67 or 70, T1-EARPHONE-T2.

89. "FUNNY TRANSISTOR" RADIO

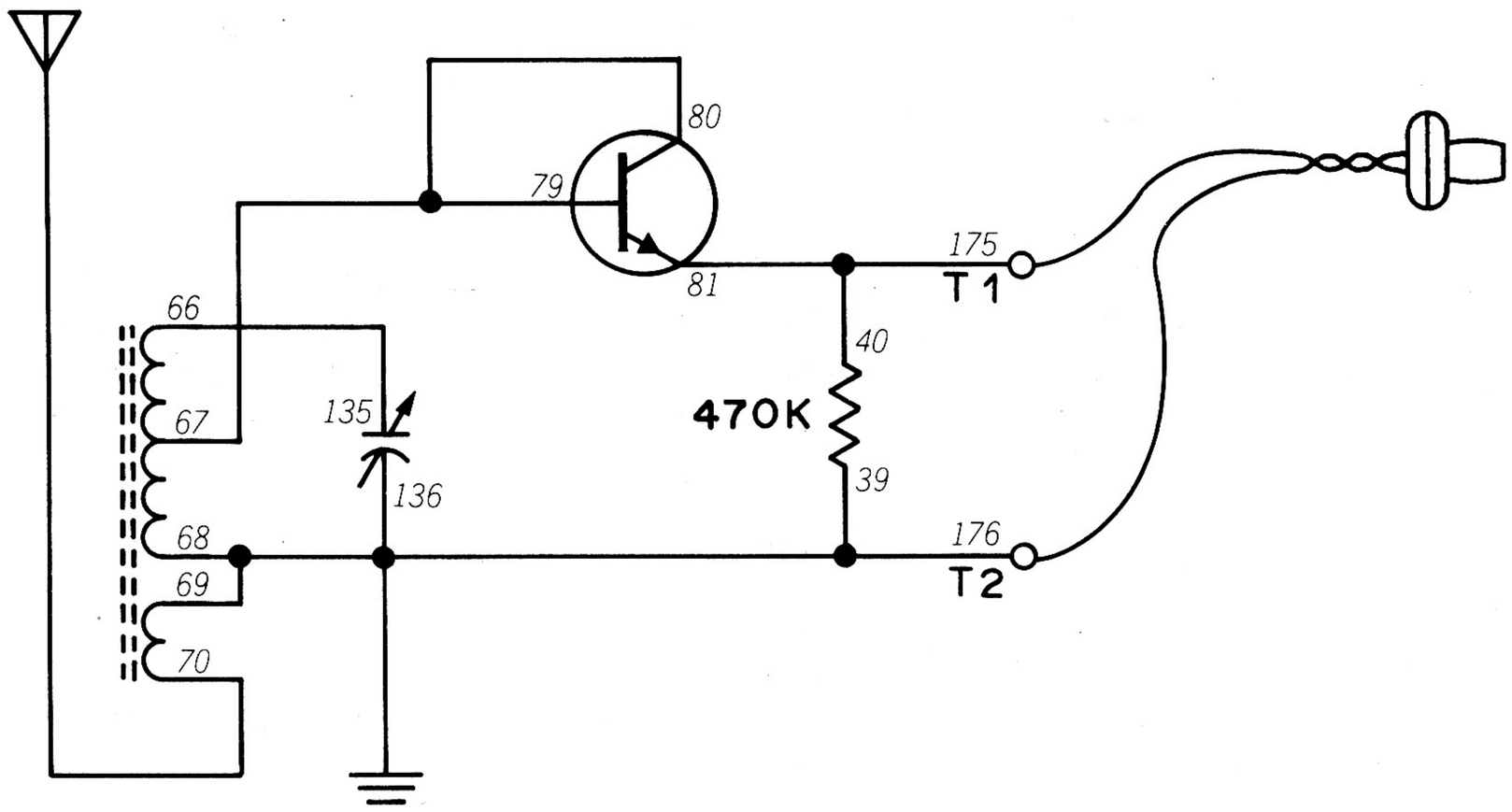

If you thought something was unusual about the schematic in our last Project, just take a look at this schematic. *There's a transistor ... but no Batteries are used!*

But when you finish making the wiring connection, connect the Earphone to Terminals 1 and 2 and listen. Adjust the Tuning control. Hear anything? If you managed to hear stations on our last Project (you'll have to use an outdoor antenna to make it work), you'll be able to hear AM stations on this one too.

Now put on your thinking cap: why does the Transistor in this Project think it's a diode?

Give up? *It's because a transistor is actually two diodes back-to-back.* One diode is from the emitter to base and the second is from the collector to the base. That's why in our circuits using transistors we have currents from emitter to base and another from collector to base. (And vice-versa ... see Project 56.)

Try using both the emitter-base and collector-base "junctions" on the transistors in your Kit in this Project. How well do the different connections work?

NOTES

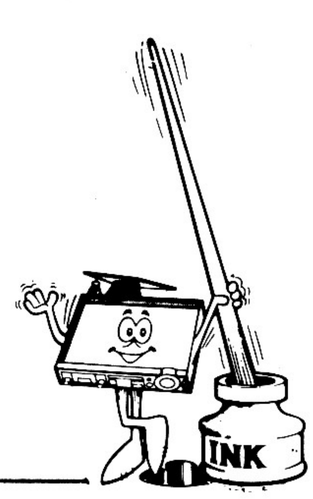

Wiring Sequence

40-81-175, 66-135, 67-79-80, 136-69-68-39-176-GROUND, ANTENNA-66-67 or 70, T1-EARPHONE-T2.

90. ONE TRANSISTOR RADIO

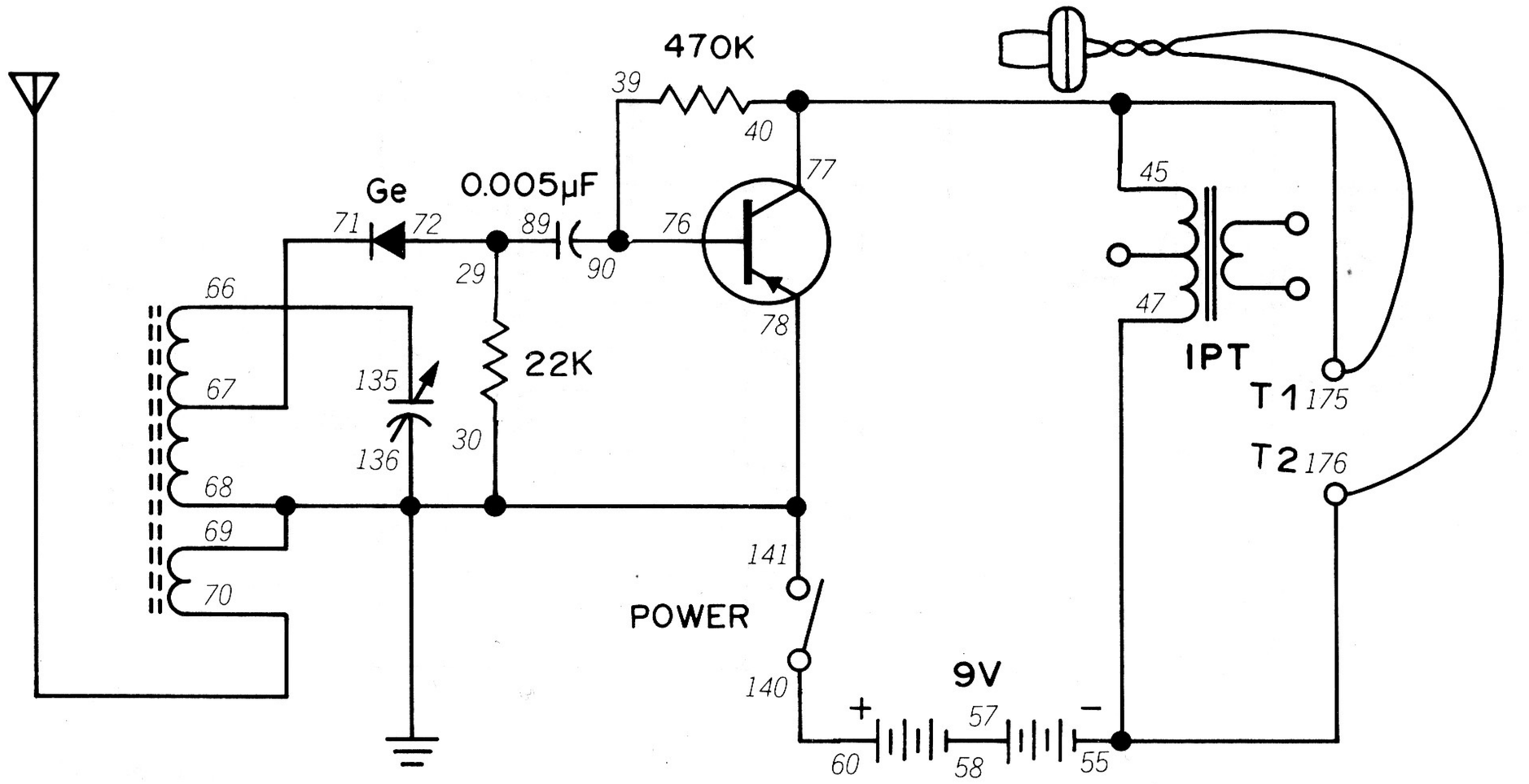

Here's a Project that again shows how electronic devices are made from simpler basic circuits. This circuit takes the output from a diode radio (similar to the one in Project 88) and feeds it to a one transistor amplifier. The result is louder volume than a crystal set can provide.

Be sure to attach an outdoor antenna and good ground connection when you finish the wiring connections. Connect the Earphone to Terminals 1 and 2 and turn the **Control Knob** to **ON**. Adjust the Tuning Control. If you heard any stations with Projects 88 and 89, you should hear stations with this circuit. And if you heard no stations with the circuits in Projects 88 and 89, you may hear some stations with this circuit.

The amplifier in this Project amplifies the sound you hear in the Earphone. It doesn't make the radio more sensitive (able to pick up weaker stations). More complex radios have circuits which amplify the radio signals before they're rectified by a diode. Another word for rectification of radio signals used in electronics is *detection*.

NOTES

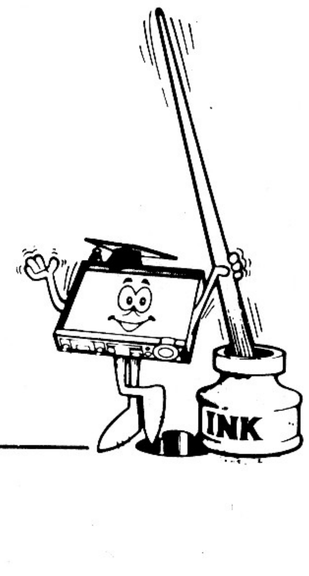

Wiring Sequence

29-72-89, 39-76-90, 45-40-77-175, 47-55-176, 57-58, 60-140, 66-135, 67-71, ANTENNA-66, 67 or 70, 78-30-68-69-136-141-GROUND, T1-EARPHONE-T2.

91. SPARK GAP TRANSMITTER

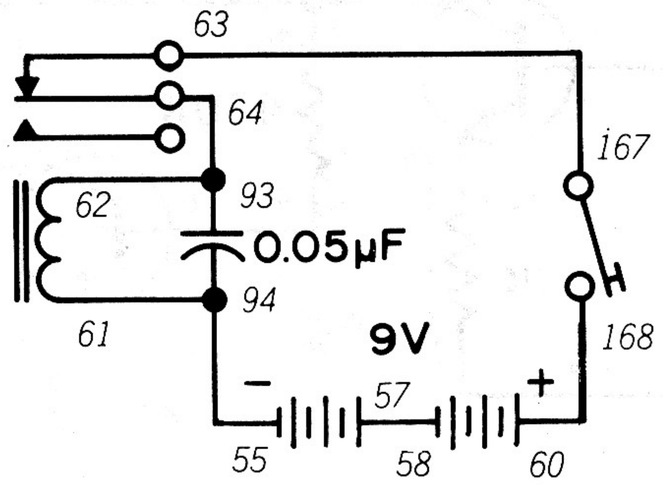

Here's an interesting Project from the early days of radio. At one time all radio *transmitters* (devices used to send radio signals) operated like this circuit.

To use this circuit, you'll need another radio that tunes the AM broadcasting band. Place the radio near your Kit and turn the power of the radio on. Tune around on the radio until you find a spot on the dial where there are no stations. Now press the Key. What do you hear from the radio?

The source of the noise you heard was the 0.05 μF capacitor discharging. As it discharges, it causes a spark to jump across the contacts of the switch in the Relay. This spark gives off radio waves which you hear on the radio.

Back in the very early days of radio, transmitters were nothing more than larger versions of this circuit. Unfortunately, there was usually a lot of interference because "spark" radio signals could be picked up all over the radio band. (Don't believe us? Tune around a bit on the AM band while pressing the Key. See how many different places you can hear the "spark" signals?)

NOTES

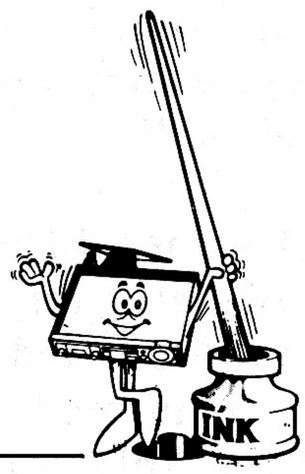

Wiring Sequence

55-61-94, 57-58, 60-168, 63-167, 64-62-93.

92. MORSE CODE TRANSMITTER

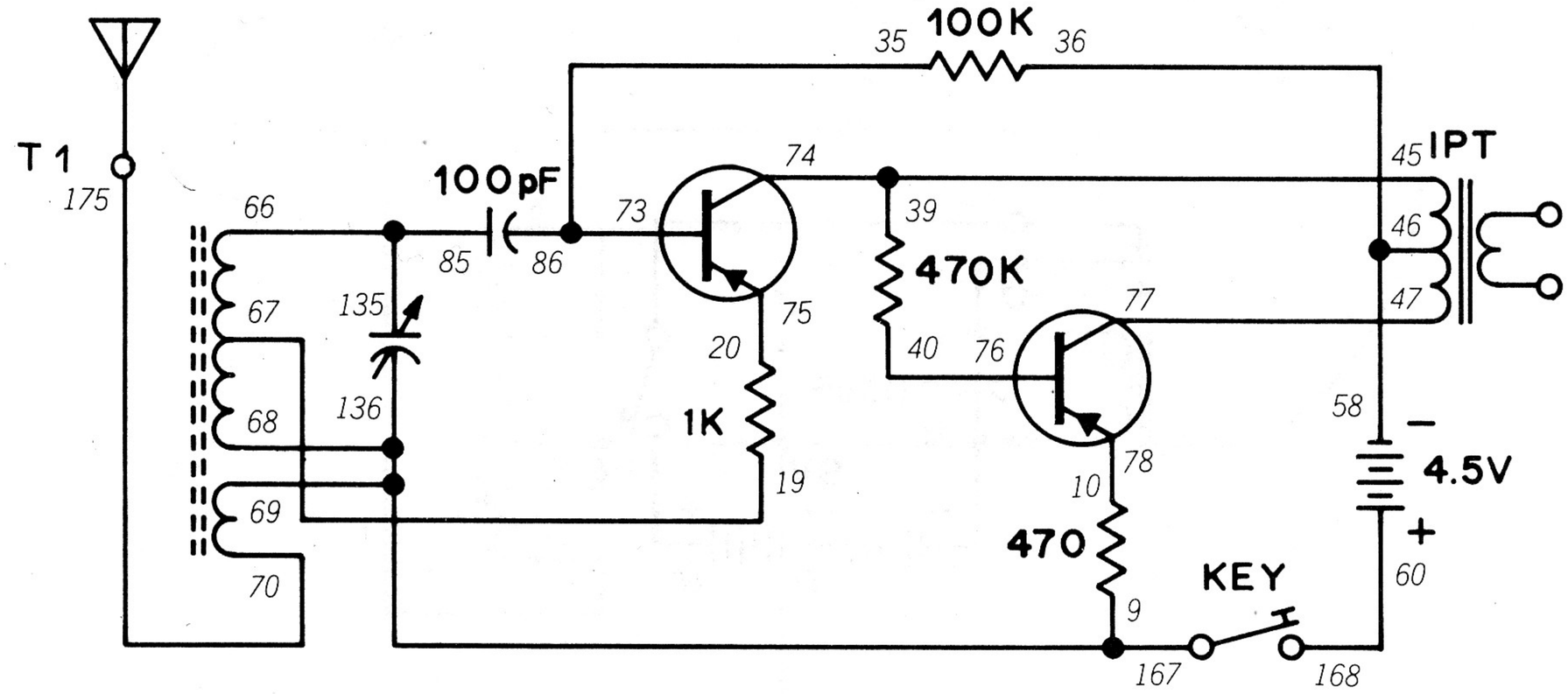

You're "on the air" with this Project! You can send Morse code signals to any radio that tunes the AM broadcast band with this two transistor circuit.

You'll need an AM radio for this Project, just like you did for the last one. Tune the radio until you find an empty spot on the dial. Press the Key and listen for a tone on the radio. If you can't hear it, tune the radio to another empty spot. When you do hear the tone, slightly adjust the Tuning control of this Project for loudest sound. You can now send Morse code messages by pressing the Key.

This is also an oscillator circuit like those we've played with. So why can we send radio messages with this circuit and not others? The secret is the *frequency* that an oscillator oscillates at. Oscillators used for sound oscillate at no more than 20,000 cycles per second—usually much less. But this oscillator operates at a *minimum* of 540,000 cycles-per second up to 1',600,000 cycles-per second!

Another difference you'll see between this type of oscillator circuit and others we've used is that the output is fed to the antenna through the antenna coil (instead of being output through the Speaker or Earphone). The antenna coil actually has two coils and they're joined by ... can you guess?

That should've been easy! The AC current from the oscillator sets up a moving magnetic field in one coil—and that sets up a current in the other one!

There's some terms used in radio you should become familiar with. Cycles per-second are sometimes known as *Hertz*. A *kiloHertz* (or kilocycle) is 1000 Hertz. And a *megaHertz* (megacycle) is equal to 1,000,000 Hertz.

NOTES

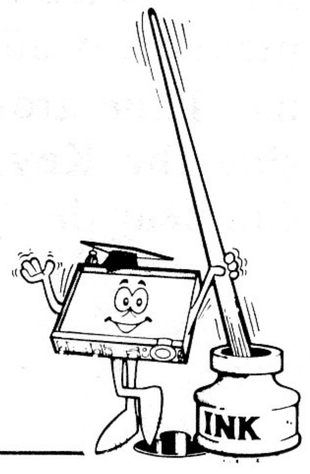

Wiring Sequence

9-68-69-136-167, 10-78, 19-67, 20-75, 35-73-86, 36-46-58, 40-76, 45-39-74, 47-77, 60-168, 66-85-135, 70-175, T1-ANTENNA.

93. REMOTE WATER LEVEL DETECTOR

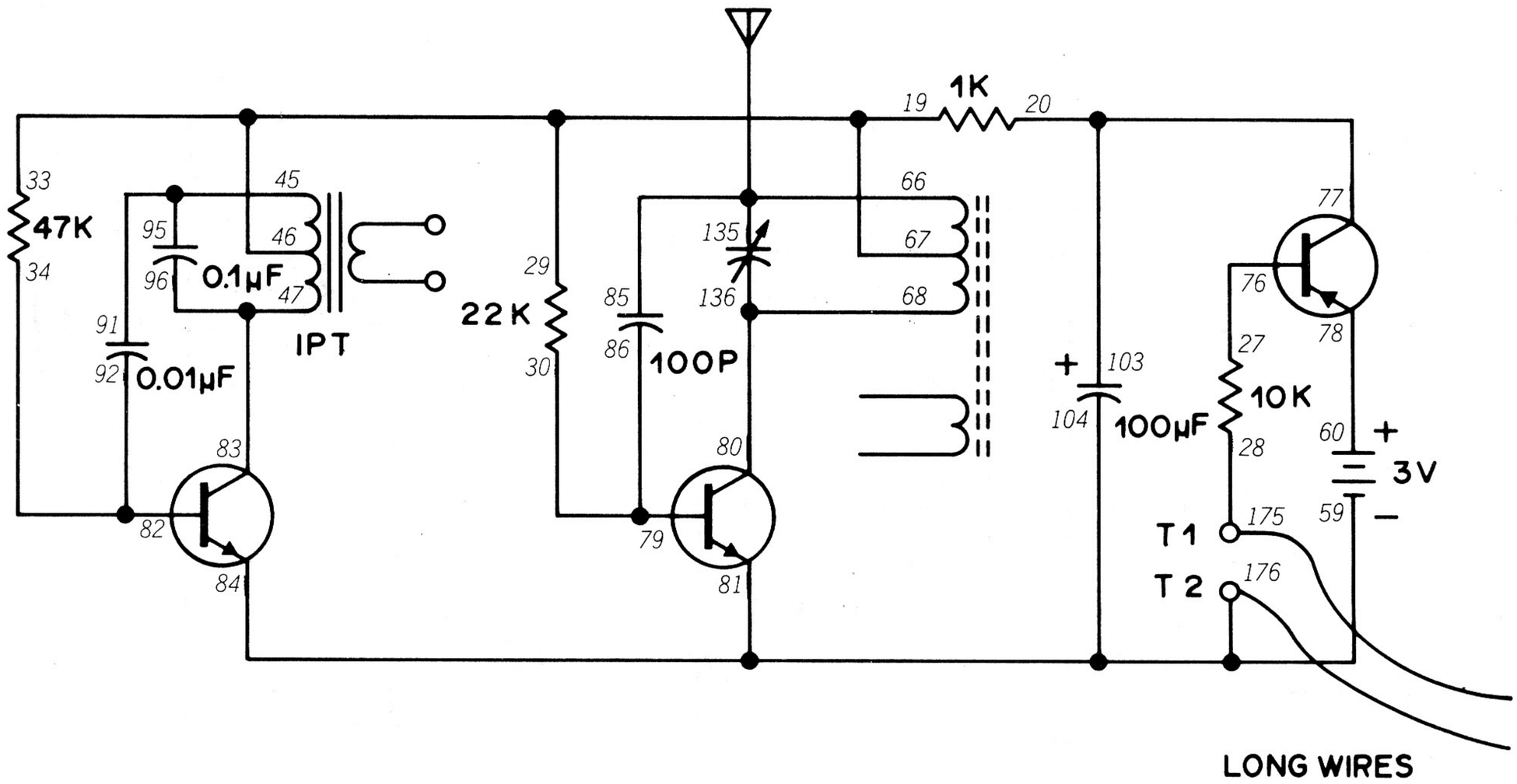

Here's a circuit similar to Project 4 but with a twist: it includes a radio transmitter. This means you can check for high water levels or rain even if you're not in a place where you could hear an alarm. Just take along an AM radio and listen!

As you can see from the schematic, there's no power connection to turn this Project ON or OFF. But whenever water (or some other conducting substance) allows electric current to flow from the emitter to the base of the 2SA Transistor, the circuit will operate. You'll hear a tone from the radio when this circuit operates.

You use this Project by finding a clear spot on the AM radio dial like we've done in previous radio Projects. And you can place the two long wires side-by-side as described in Project 4. You can also use this as a remote door alarm by following some of the steps in Project 79. Experiment to see the maximum range you can receive signals from this Project—it will likely be a few feet.

Of course, you can come up with some interesting applications for this circuit on your own. You might try adding the CdS Cell between the 2SA Transistor's emitter and base. Or you could add the 50K variable resistor and Key in the emitter-base circuit or ... well, you get the idea. Be sure to keep notes of what you manage to come up with.

See—you're starting to design your own circuits!

NOTES

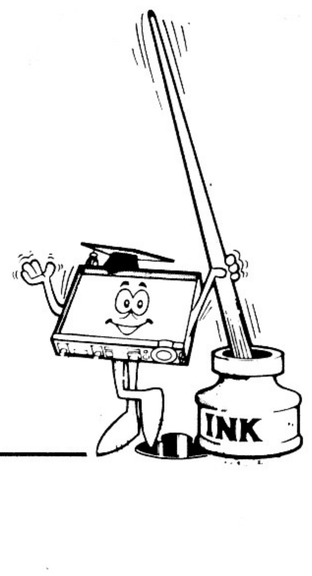

Wiring Sequence

19-67-29-33-46, 20-77-103, 27-76, 28-175, 34-82-92, 45-95-91, 47-83-96, 59-81-84-104-176, 60-78, 66-85-135-ANTENNA, 79-30-86, 80-68-136, T1-LONG WIRE, T2-LONG WIRE

94. AM BROADCASTER

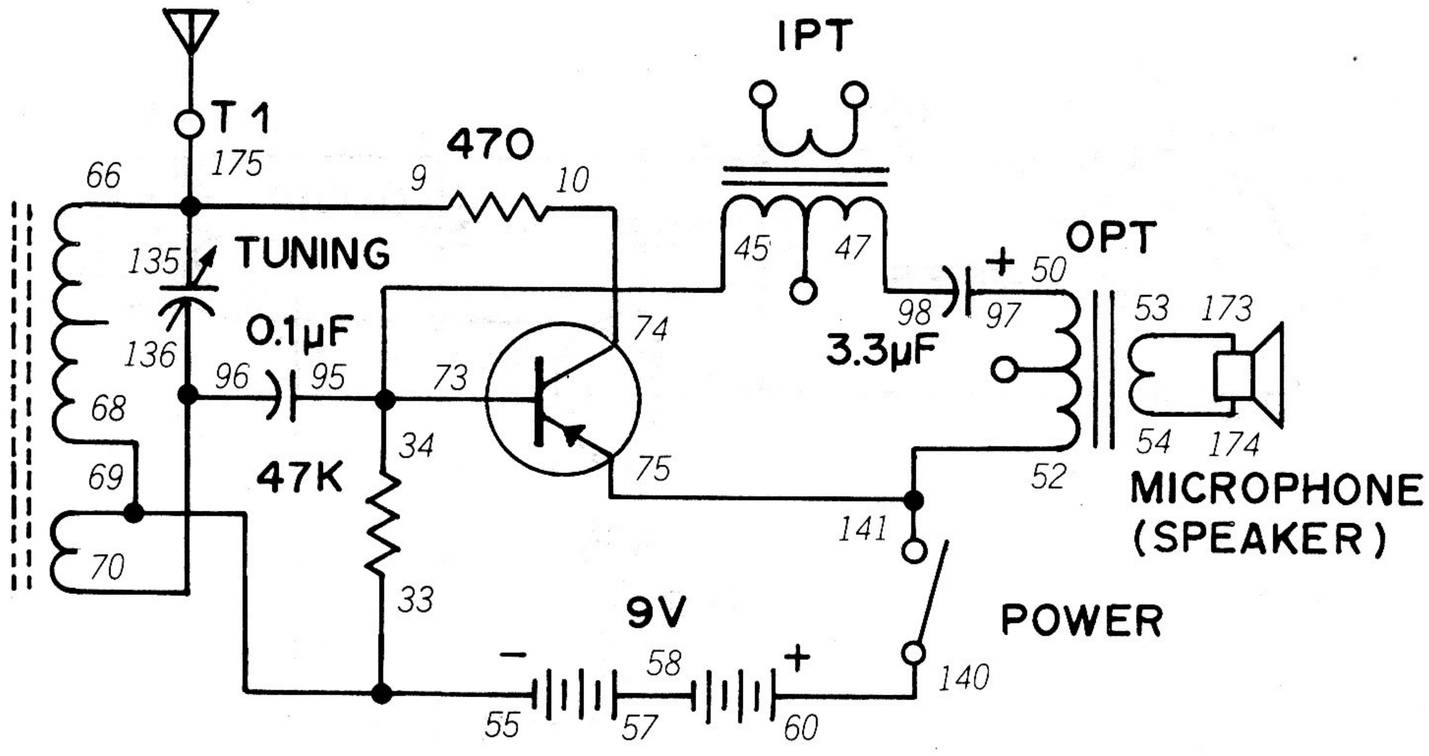

If you've ever had a secret dream of being a disc jockey on a radio station, this Project is for you! This will let you broadcast your voice over any nearby AM radio.

This Project uses the Speaker as a microphone. Tune an AM radio to an empty spot on the dial as you've done for our other radio circuits. Turn the Control Knob to ON and cup your hands around the front of the Speaker of your Kit. Now talk into the Speaker in a normal voice. Have someone listening to the radio. Speak louder or softer as needed and adjust the Tuning control for best sound.

This transmitter uses AM and is received on an AM radio. "AM" stands for *amplitude modulation*, which means that the output of this transmitter varies with your voice.

You've also heard of FM radio stations. "FM" stands for *frequency modulation*. That means the frequency of the radio signal is varied according to your voice.

NOTES

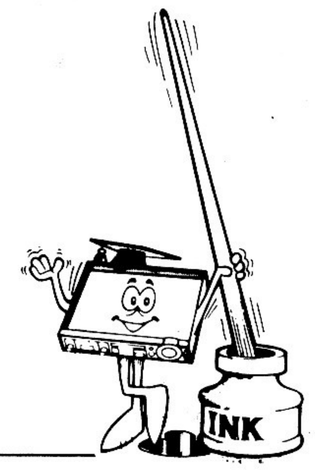

Wiring Sequence

9-66-135-175, 10-74, 45-34-73-95, 47-98, 50-97, 52-75-141, 53-173, 54-174, 55-33-68-69, 57-58, 60-140, 96-70-136, T1-ANTENNA.

95. BASIC AUDIO OSCILLATOR

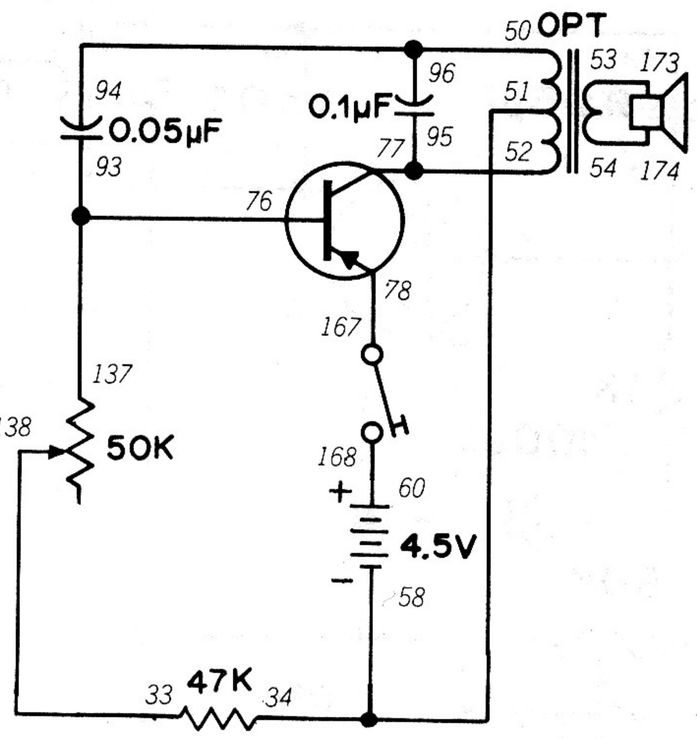

This is a circuit that's the "heart" of many of the Projects in this section. It's also great as a starting point for your own tinkering and circuit designing.

Now take a good look at the schematic ... can you tell how this circuit works? (No peeking at all this time. By now this should be a snap for you!)

The circuit works due to the charging and discharging of the 0.05 µF capacitor. The rate at which it charges and discharges is controlled by the 50K variable resistor and the 47K resistor!

In the next several circuits we're going to see what strange and unusual sounds we can produce with audio oscillators. But don't just stop with imitating what we're doing. Play around with these circuits some—see what you can come up with on your own! Take this Project—try different values of the resistors and capacitors and see what sounds you can produce.

You'll find the notes you've made on past Projects really coming in helpful now. *Be sure to keep notes about what you do now.* And why not add something new to your notes—try drawing schematic diagrams of the circuits you create. With a little practice you'll be drawing them like a "pro!"

NOTES

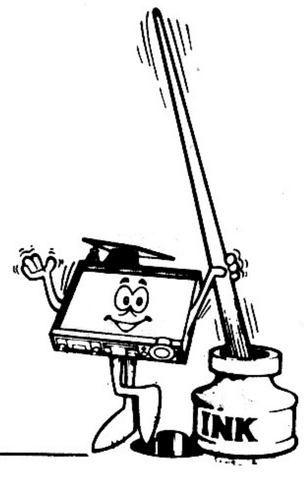

Wiring Sequence

33-138, 34-51-58, 50-94-96, 52-77-95, 53-173, 54-174, 60-168, 76-93-137, 78-167.

96. LIGHT-CONTROLLED BIRD

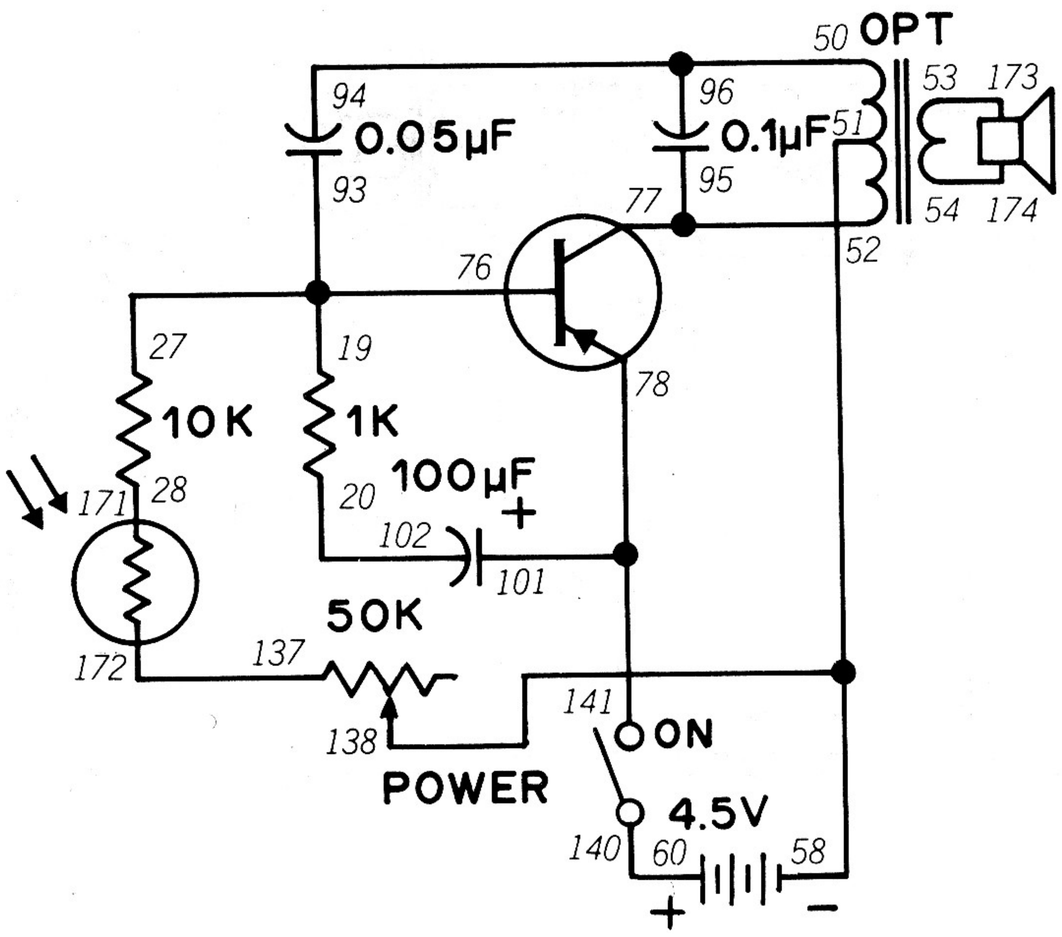

Here's an electronic bird that will sing for you from morning till night ... but his singing will change as it gets near sundown.

After you finish the wiring connections, turn the Control Knob to ON. You'll hear a sound like a chirping bird from the Speaker. Now trying varying the amount of light that falls on the CdS Cell by covering it with your hand or shining a flashlight on it. You'll notice the chirping becomes faster in bright light. You can also alter the chirping rate with the 50K Control.

There's some parts in this Project you might be tempted to change, such as the 100 µF capacitor or the 1K resistor. There are others, of course, but we want you to find them for yourself!

NOTES

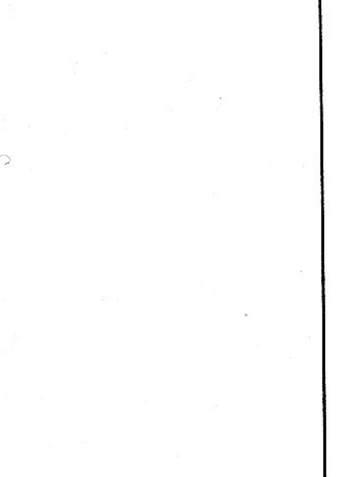

Wiring Sequence

19-27-76-93, 20-102, 28-171, 50-94-96, 52-77-95, 53-173, 54-174, 58-51-138, 60-140, 101-78-141, 137-172.

97. ELECTRONIC MOTORCYCLE

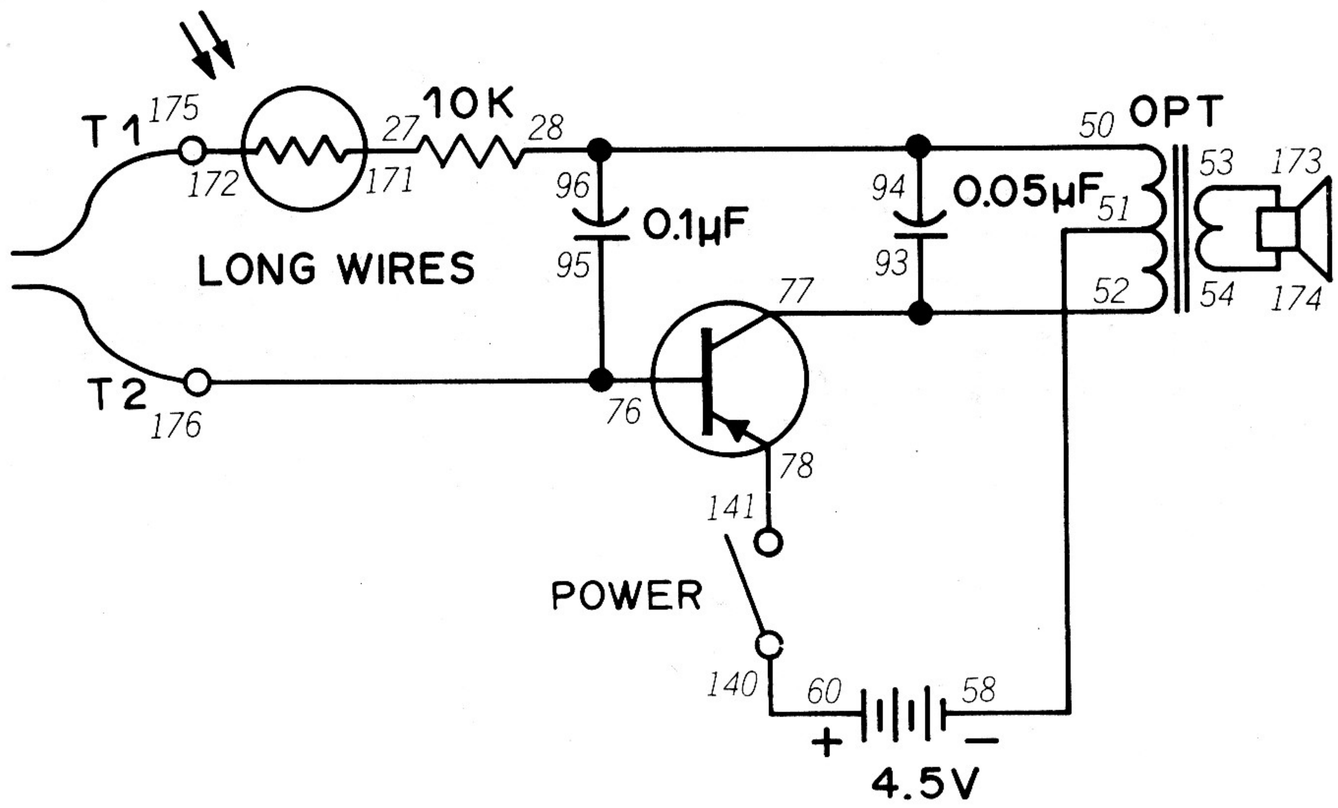

Ever try steering a motorcycle with just four fingers? That's dangerous on a real motorcycle, but it's a lot of fun on this electronic version.

This circuit is similar to the one we played with in Project 8. You'll notice that we've added a CdS Cell to this circuit to give you even more control over its operation.

To use this Project, turn the Control Knob to the right to switch power ON. Grasp the exposed metal ends of each long wire with the thumb and index finger of your hands. Now vary the grip as you listen to the sound from the Speaker. With a little practice you can make the sound of a speeding motorcycle. You can also get different sounds by controlling the amount of light that falls on the CdS Cell.

Try using this circuit without the CdS Cell and with a different capacitor in place of the 0.1 μF one (remember to carefully observe the polarity of the electrolytic capacitors—see the description of different parts at the front of this Manual if your memory needs refreshing).

NOTES

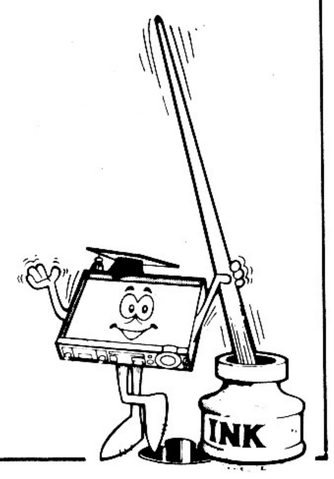

Wiring Sequence

27-171, 50-28-94-96, 51-58, 52-77-93, 53-173, 54-174, 60-140, 76-95-176, 78-141, 172-175, T1 - LONG WIRE, T2 - LONG WIRE.

98. CHIRPING BIRD

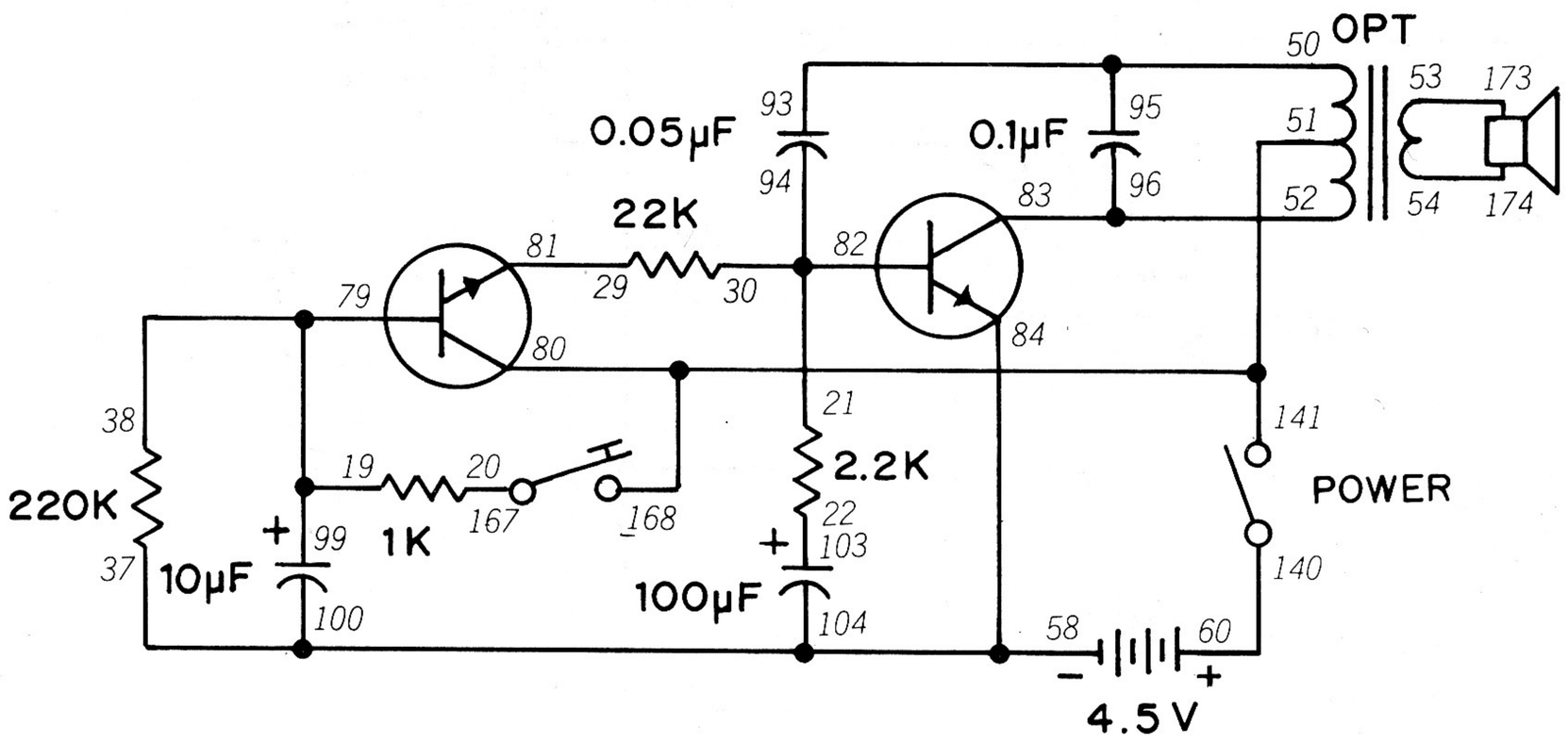

Here's a Project that imitates our feathered friends —you could say it mocks the mockingbird!

When you turn the Control Knob to ON, you won't hear any sound from the Speaker. Now press the Key. You'll hear a chirping sound from the Speaker. Release the Key, and you'll still hear the chirping sound for a few more moments until it stops. Take a look at the schematic and see if you can tell why this happens.

You'll see that when you press the Key a current is supplied to the base of the left Transistor. This allows the Transistor to operate and supplies current for the right Transistor. The 10 µF capacitor charges when the Key is pressed and starts to discharge when the Key is released. When it is completely discharged, the circuit will no longer work.

Try a different value of capacitor in place of the 10 µF and 100 µF ones and see what happens. You can also use this Project as a door chime by using some of the techniques you found out about in Project 79. Can you think of some other applications? (The CdS Cell could do some interesting things if placed ... *no, we'll let you figure that one out!*) Be sure to keep notes and schematics about what you do.

NOTES

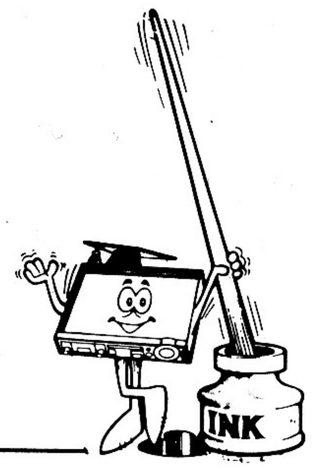

Wiring Sequence

19-38-79-99, 20-167, 21-30-94-82, 22-103, 29-81, 37-100-104-84-58, 50-93-95, 51-80-141-168, 52-83-96, 53-173, 54-174, 60-140.

99. ELECTRONIC SIREN

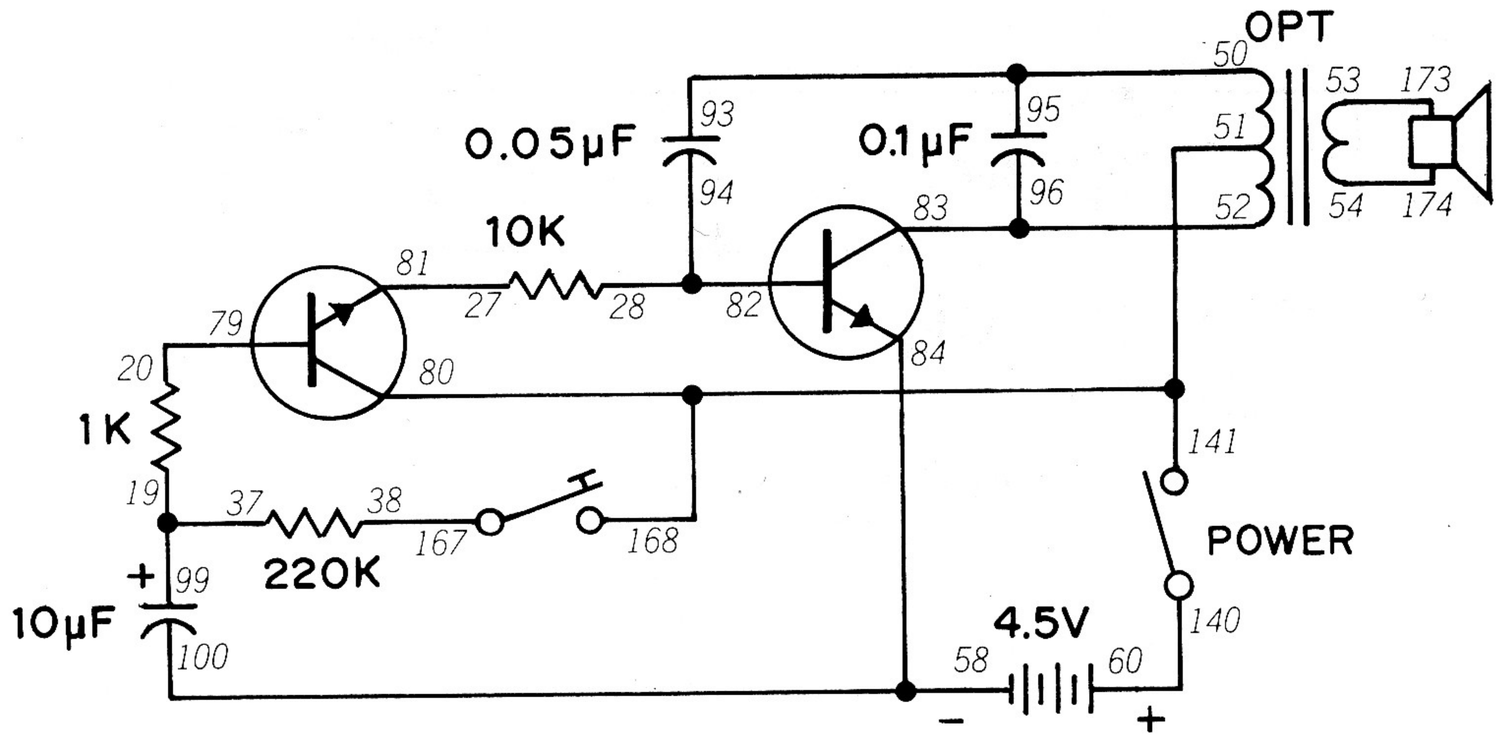

Did you like our Earsplitter (Project 5)? Well, as the old saying goes, "you ain't heard nuthin' yet!"

Turn the Control Knob clockwise to ON and press the Key. You'll hear the sound from the Speaker slowly build step-by-step until it reaches a mind-boggling peak. Release the Key, and the volume from the Speaker will gradually diminish and eventually stop.

Carefully compare the schematic of this Project with that of our last Project. What's the biggest difference you can spot? Try some other ways of changing the current to the base of the right Transistor and see what other sounds you can come up with.

You can adapt this circuit for other applications ... wouldn't this make a terrific door or other alarm?

NOTES

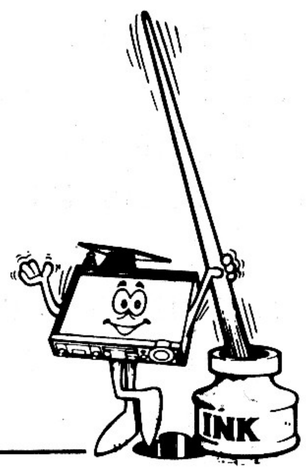

Wiring Sequence

19-37-99, 20-79, 27-81, 28-82-94, 38-167, 50-93-95, 51-80-168-141, 52-83-96, 53-173, 54-174, 58-84-100, 60-140.

100. FISH CALLER

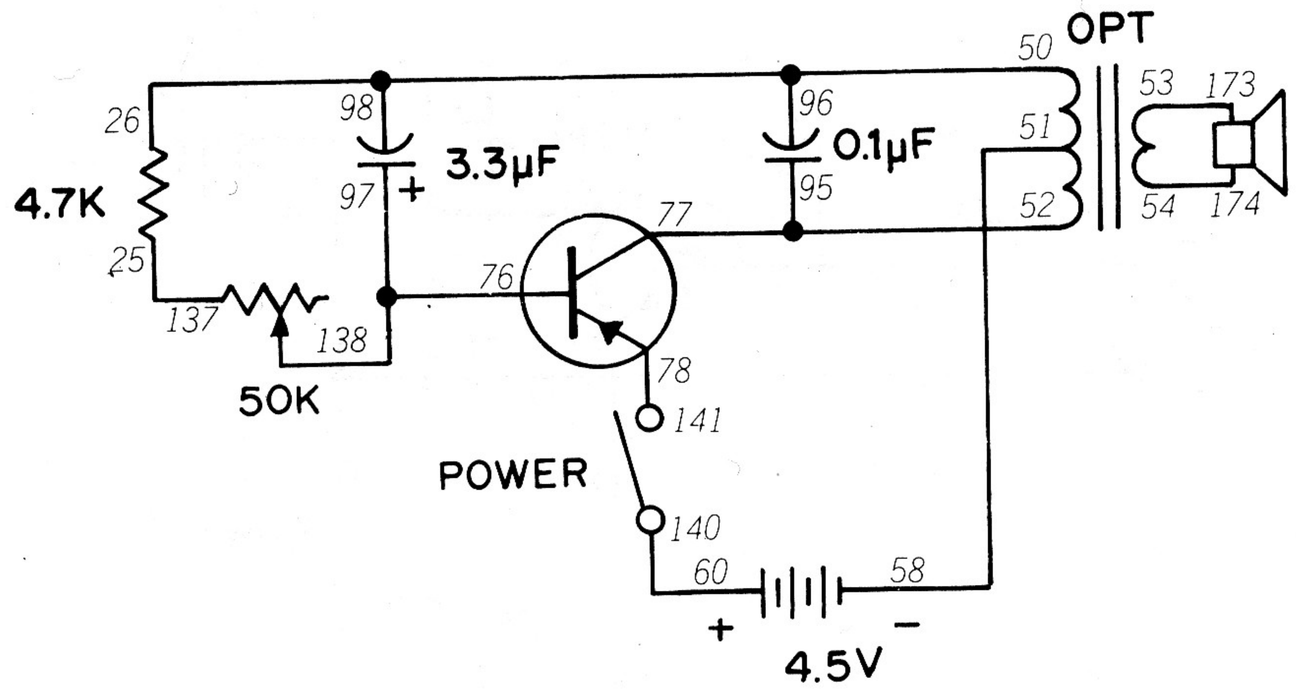

Did you know that some marine animals communicate with each other by sound? You've probably heard that whales and porpoises communicate by sound, but they're not the only ones. Research indicates that some fish are attracted by certain sounds. This circuit will let you see for yourself.

First try building this Project on dry land. When you set the Control Knob to ON, you'll hear sound pulses from the Speaker. You can control the rate of the pulses with the Control. Look at the schematic—you'll find this to be a variation of the audio oscillator circuit we've used in other Projects in this Manual.

How well does this work in attracting fish? If you have an aquarium at home or at your school, you can place your Kit near the aquarium glass and watch to see if fish are attracted to the sound. Or you can actually try it out while fishing. Get another speaker from your local Radio Shack and attach it to terminals 53 and 54 using long lengths of insulated wire (also available from your nearest Radio Shack).

Carefully wrap the speaker in a waterproof plastic bag or seal it inside of a jar. Make sure no water can reach the speaker. Now lower it into the water. Then cast a line in the water and wait for the results.

If you don't have much luck with this Project, try altering a few parts values for a different pulse sound. Be sure to keep notes of your results—and good fishing.

NOTES

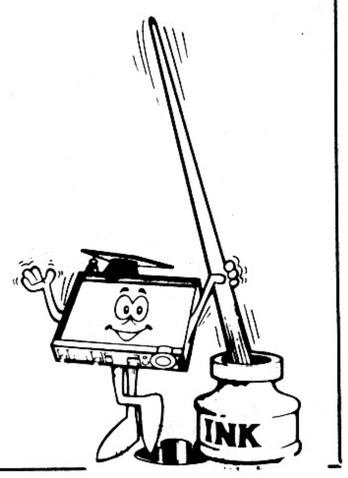

Wiring Sequence

25-137, 26-50-98-96, 51-58, 52-77-95, 53-173, 54-174, 60-140, 76-97-138, 78-141.

101. PLANT GROWTH STIMULATOR

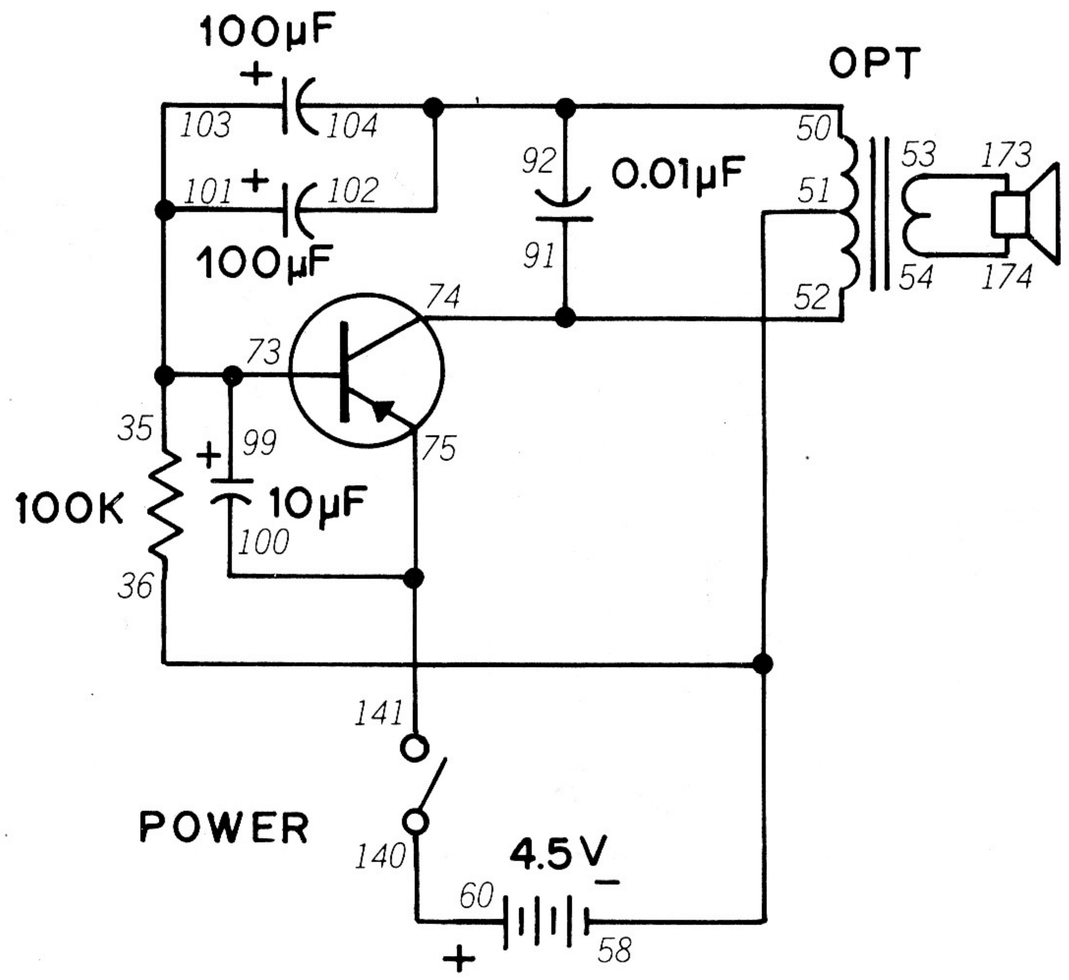

Marine animals are not the only things in nature which respond to sound. Some persons claim that sound can affect how fast plants grow! Here's a Project that will let you test this idea for yourself.

As you can see from the schematic, this is the same type of oscillator circuit we've used in many other Projects. Current to the Transistor's base is supplied through the 100K resistor. Feedback to keep the oscillator going comes from the two 100 µF capacitors as they charge and discharge—notice how they are connected to each other. What is this connection method called?

(That one should've been easy for you—they're connected in parallel!)

To see if this Project can actually speed up the growth of plants, you'll need to set up an experiment just like a scientist does. Take a dozen budding plants (such as beans) and divide them into two groups. Make sure each group gets the same amount of sunlight, water, fertilizer and keep both groups at the same temperature. Let one group "hear" sound from the Project for a few minutes each day At the end of two weeks compare the two groups. Has one grown faster than the other? Is the difference large or small? *(Small differences in the growth rate might be due to chance.)*

NOTES

Wiring Sequence

35-73-99-103-101, 36-51-58, 50-102-104-92, 52-74-91, 53-173, 54-174, 60-140, 100-75-141.

102. ELECTRONIC ORGAN

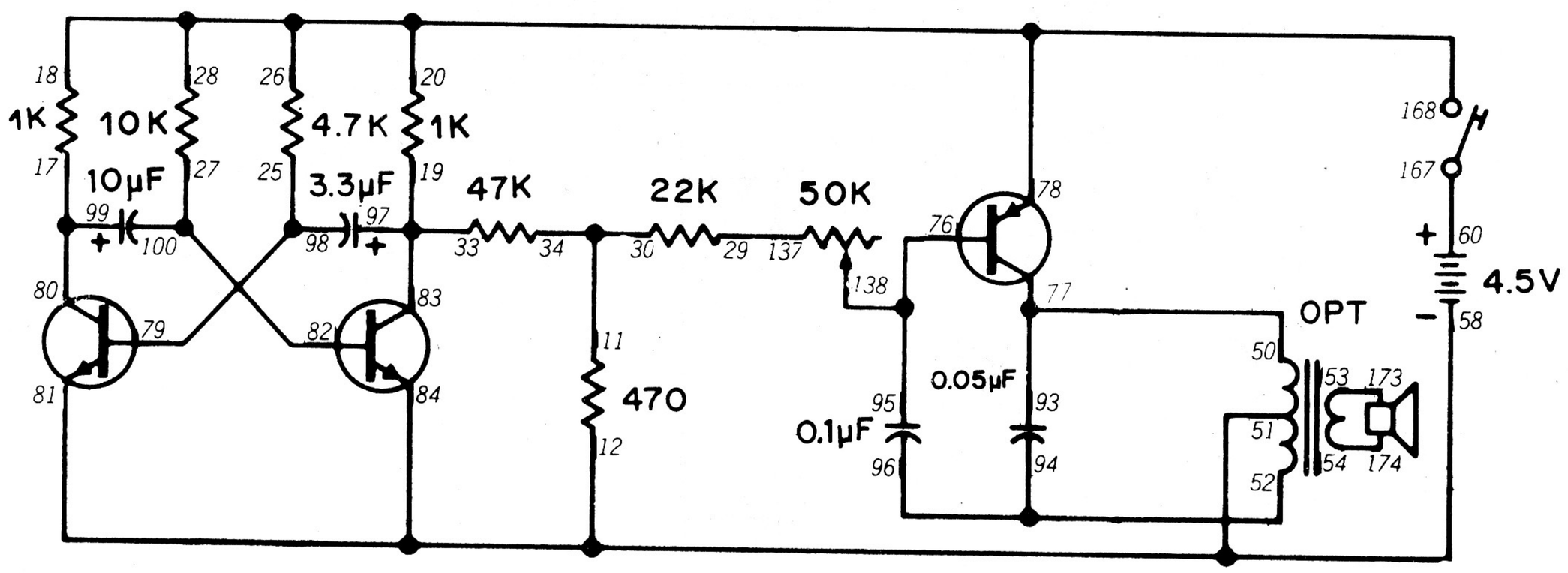

Electronic organs have revolutionized the music world in recent years. This Project will show you the principles of electronic organs and let you play some simple tunes as well.

As you can see from the schematic, this Project is an oscillator circuit coupled to an amplifier circuit —remember how we told you complex electronic devices are actually composed of simple circuits? After you finish wiring connections, press the Key down. You'll hear a tone from the Speaker. You can vary this tone with the 50K Control. Try pressing the Key and rotating the Control so that you can produce simple tunes.

This circuit is a "natural" for experimentation! You can alter the tonal range by changing the 10 μF and 3.3 μF capacitors to different values. Try adding the Select Switch in place of the Key —and see if you can use the Key to add another component to the circuit (like an extra capacitor in parallel to the 10 μF or 3.3 μF ones). Be sure to keep notes of what you do.

NOTES

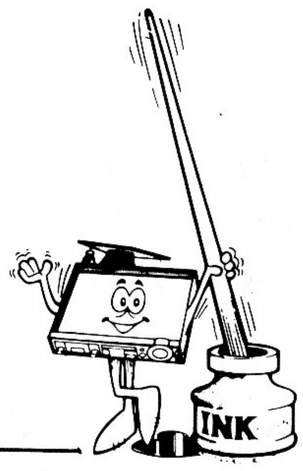

Wiring Sequence

11-30-34, 12-81-84-51-58, 17-80-99, 19-33-97-83, 20-18-26-28-78-168, 25-79-98, 27-82-100, 29-137, 50-77-93, 52-94-96, 53-173, 54-174, 60-167, 76-95-138.

103. ELECTRONIC RAINDROPS

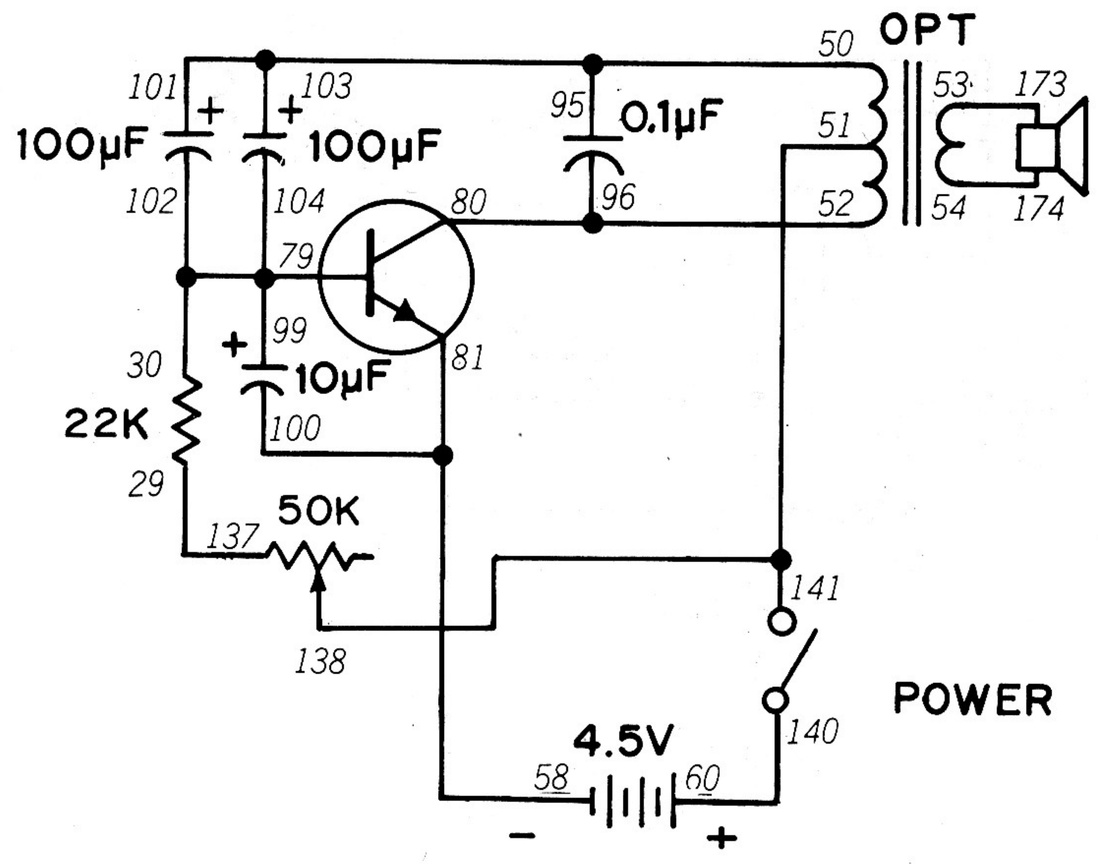

This circuit produces a sound like raindrops falling. By adjusting the Control Knob you can change it from a drizzle to a downpour.

As you can see on the schematic, this Project uses two 100 μF capacitors in parallel. Their charging and discharging rates are controlled by the 22K resistor and 50K Control. When you set the Control Knob to ON, you'll hear the "falling raindrops" sound from the Speaker. Moving the Control Knob will cause the sound to "speed up" or "slow down."

Try substituting different values of capacitors and resistors in this Project, just like you've done in previous circuits. Be sure to keep notes about what you discover.

NOTES



Wiring Sequence

29-137, 30-79-99-104-102, 50-101-103-95, 51-141-138, 52-80-96, 53-173, 54-174, 58-81-100, 60-140.

104. ELECTRONIC CAT

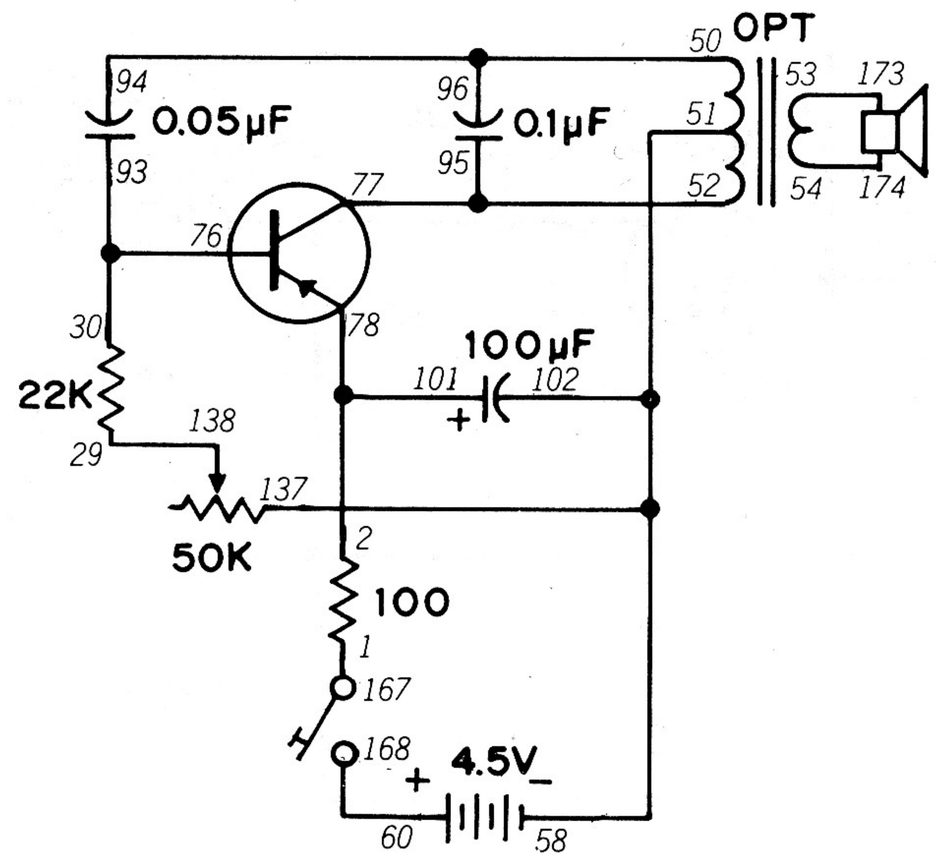

Bothered by mice? And you don't have a mouse-trap? Try this Project instead – see if the sound of the electronic feline can keep them away. *(And you don't have to bait it with any cheese!)*

This Project is another variation of the audio oscillator circuit we've used in other Projects. Look at the schematic for this Project and notice the location of the 100 µF capacitor. This is why this circuit will operate even if you only briefly press the Key and then release it.

When you press the Key, you'll hear the "cat's meow" from the Speaker. Adjust the Control Knob– what effect does it have on the circuit's operation?

You can experiment with this circuit and produce a variety of other sounds. Just don't change the value of the 0.05 µF capacitor to more than 10 µF or reduce the value of the 100 ohm resistor – otherwise the Transistor might be damaged.

Have fun with this Project – and we hope you're not bothered by mice anymore!

NOTES

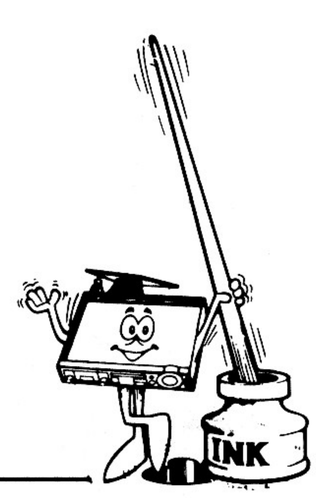

Wiring Sequence

1-167, 2-78-101, 29-138, 30-76-93, 50-94-96, 52-77-95, 53-173, 54-174, 58-51-102-137, 60-168.

105. ELECTRONIC BIRD

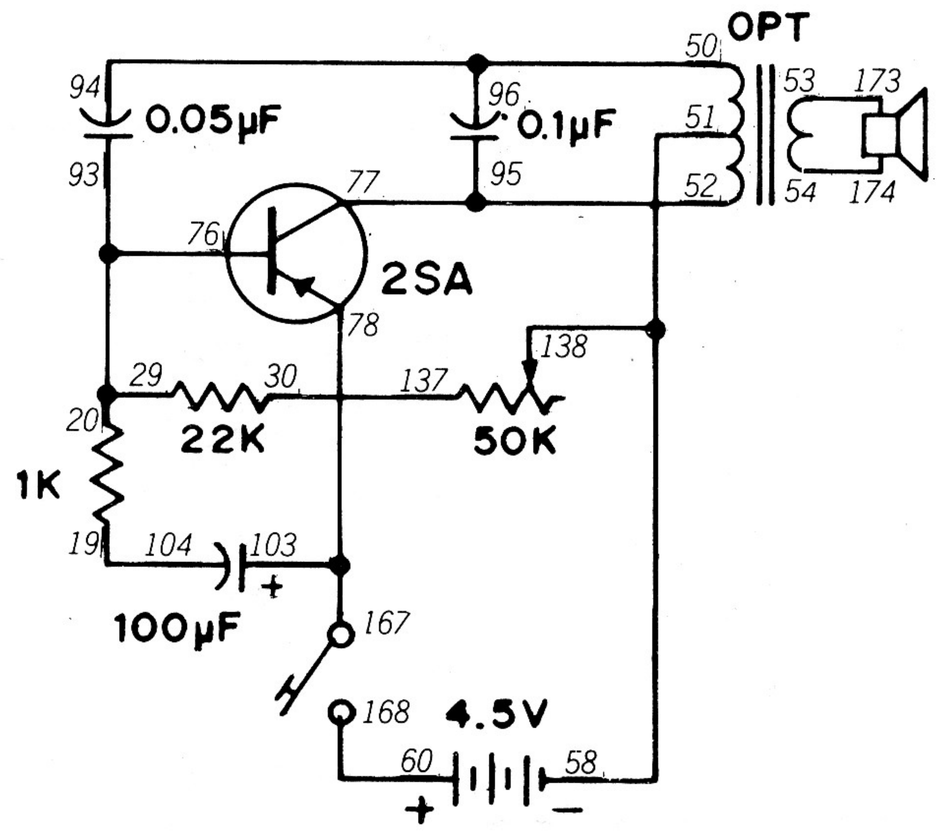

Have you heard the old saying about the "cat that ate the canary?" We use that expression when we mean someone looks guilty of having done something they shouldn't have. *(So what's that got to do with electronics? Simple – we've decided to make an electronic bird for our electronic cat!)*

This circuit is another variation of an audio osaillator circuit. When you press the Key, you'll hear a "chirping" sound from the Speaker. You can make the "bird" chirp faster or slower by adjusting the Control Knob

If you like to make changes to these Projects *(of course you do!)* you'll love this circuit! You can change just about any part and get a different result. Just don't decrease the value of the 22K resistor below 10K (this will help prevent damage to the Transistor).

Since this is our last audio oscillator Project for a while, it might be good to review your notes. What have you discovered about oscillators so far? Were you able to come up with some interesting circuits on your own? Try making up your own "Electronic Zoo and Sound Factory" like we've done here.

Now here's a challenge for you – think you can make up your own audio oscillator circuit using just your notes and what you've got stored in your head? Try it, and don't peek at this Manual. We think you can do it. *(And if you do, you're designing electronic circuits just like we promised you would do!)*

NOTES

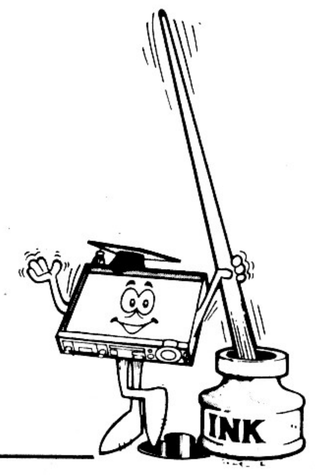

Wiring Sequence

19-104, 20-29-76-93, 30-137, 50-94-96, 52-77-95, 53-173, 54-174, 58-51-138, 60-168, 78-103-167.

106. DIGITAL RHYTHM

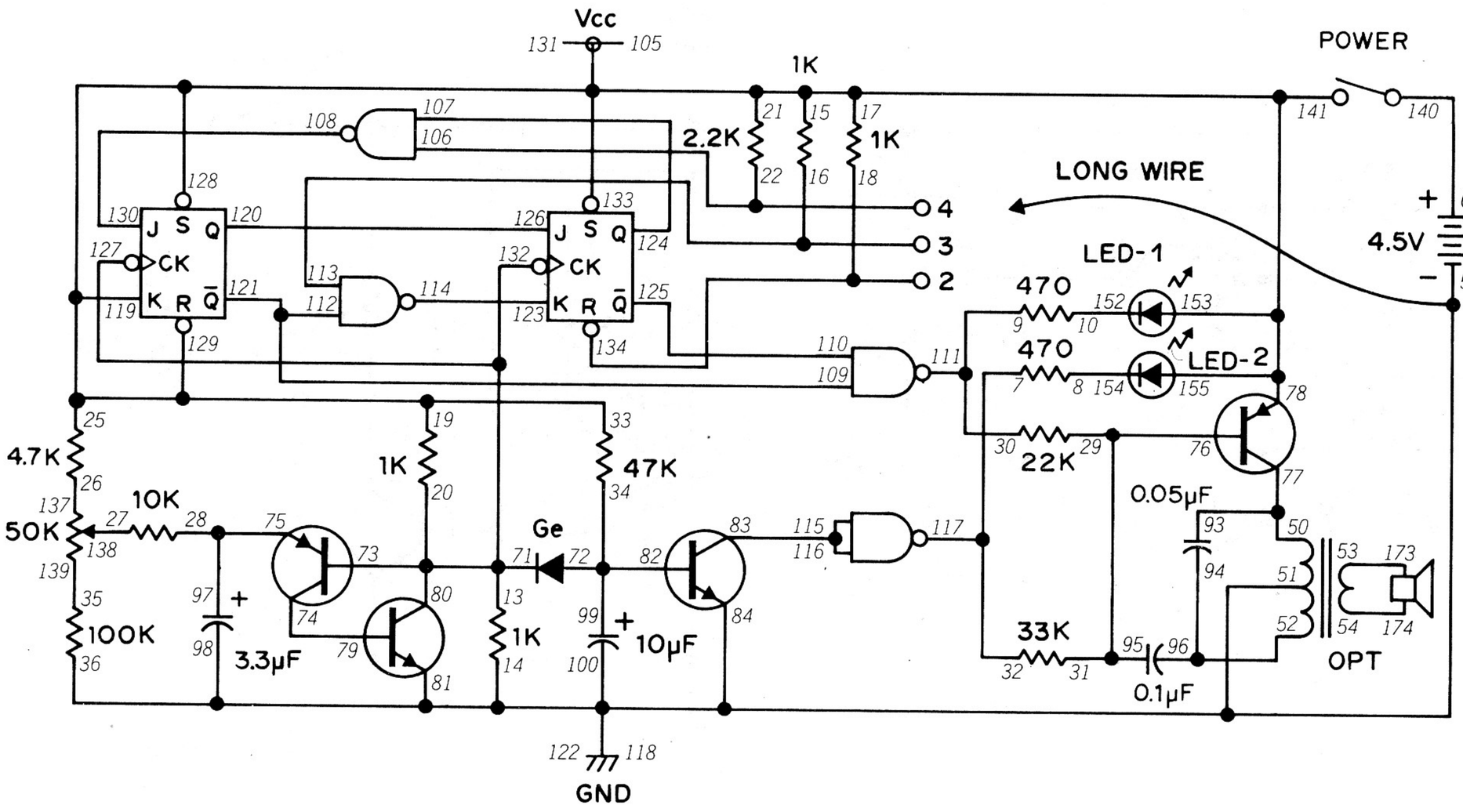

We can also use digital electronics in circuits to make unusual sounds. This Project uses the counter circuit we first met back in Project 17 along with a familiar oscillator circuit.

Look at the schematic for this Project. You'll notice that the output of the oscillator goes into the counter circuit instead of the Speaker. The oscillator circuit generates pulses (similar to the raindrops sound in Project 103). Since digital circuits operate "on" or "off", they can make use of these pulses.

Do circuits like amplifiers and oscillators have a special term for themselves like digital circuits do? Yes – it's called *analog.* Analog circuits are those we can vary *continuously* in some way – their volume, tone, etc. (Digital circuits, as you remember, are either "on" or "off" – there's no "in-between"!)

Turn the Control Knob clockwise to switch power ON. What do you hear from the Speaker? What are the LEDs doing? Now touch terminals 18, 16 and 22 in order. What do you hear now from the Speaker? Do the LEDs change in any way? Rotate the Control Knob and see what effect this has on the circuit's operation.

Make some notes about how you think this Project works. Before long you'll be able to explain how this works. *(Remember how we asked you make notes about earlier Projects? Came in handy, didn't they?)*

NOTES

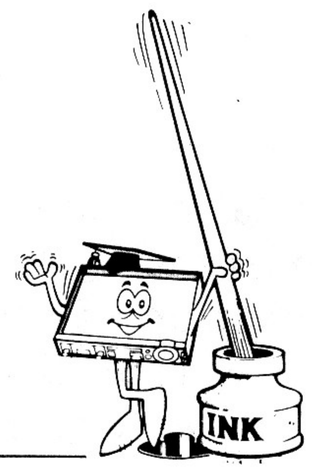

Wiring Sequence

7-32-117, 8-154, 9-30-111, 10-152, 13-20-71-73-80-127-132, 14-36-51-58-118-122-84-81-98-100-LONG WIRE, 16-113, 18-134, 22-106, 26-137, 27-138, 28-75-97, 31-29-76-95, 33-21-25-15-17-19-78-141-153-155-128-129-131-133-119-105, 35-139, 50-77-93, 52-94-96, 53-173, 54-174, 60-140, 74-79, 83-115-116, 107-124, 108-130, 109-121-112, 110-125, 114-123, 120-126, 34-82-99-72

107. SOUND MACHINE I

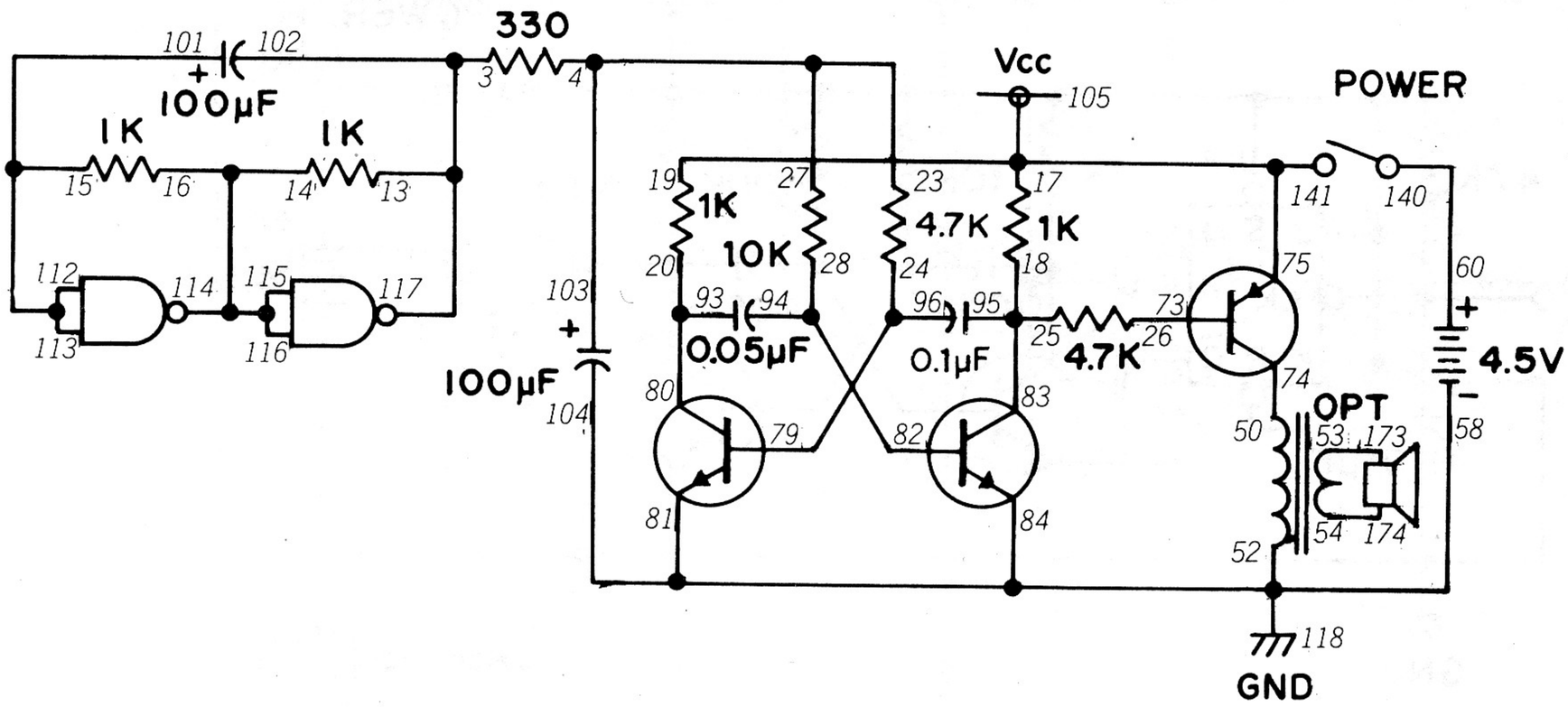

Here's another digital sound project that makes use of a circuit we've used in some earlier Projects. Can you tell which circuit we're talking about by looking at the schematic?

While you're pondering that question, why not listen to the sound this Project makes? Since there are many wiring connections, take your time and check your work. When you've finished, turn the Control Knob to ON. What do you hear? Can you explain how this sound is produced by looking at the schematic?

The two 2SC Transistors are used to make up a multivibrator circuit *(did you recognize our old friend?)*. But notice that we're using two NAND gates with the multivibrator *(Project 67 showed how a NAND gate works)*. The two NAND gates effect the operation of the multivibrator, whose output then goes to the audio amplifier using the 2SA Transistor. The result is the sound you hear from the Speaker.

You can change the sound this circuit makes by substituting a different value for the 100 μF capacitor. Also try different values for the 10K resistor and 0.05 μF capacitor and see what happens.

Notice that we said we're using "two NAND gates" although all connections are being made to a single component. Does this and the name of that component give you any idea about what an Integrated Circuit is? (You might want to review the guess you made after building Project 67. Have you changed your mind any since using this current Project?)

NOTES

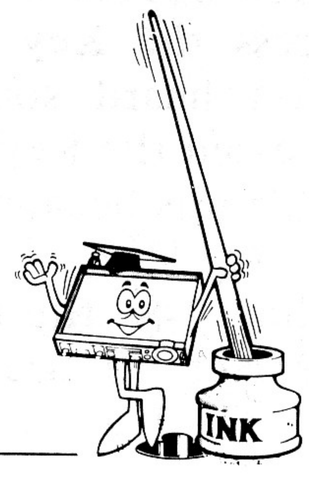

Wiring Sequence

3-13-102-117, 4-23-27-103, 14-16-114-115-116, 15-101-112-113, 18-25-95-83, 20-93-80, 24-79-96, 26-73, 28-94-82, 50-74, 53-173, 54-174, 60-140, 104-81-84-52-58-118, 105-17-19-75-141.

108. SOUND MACHINE II

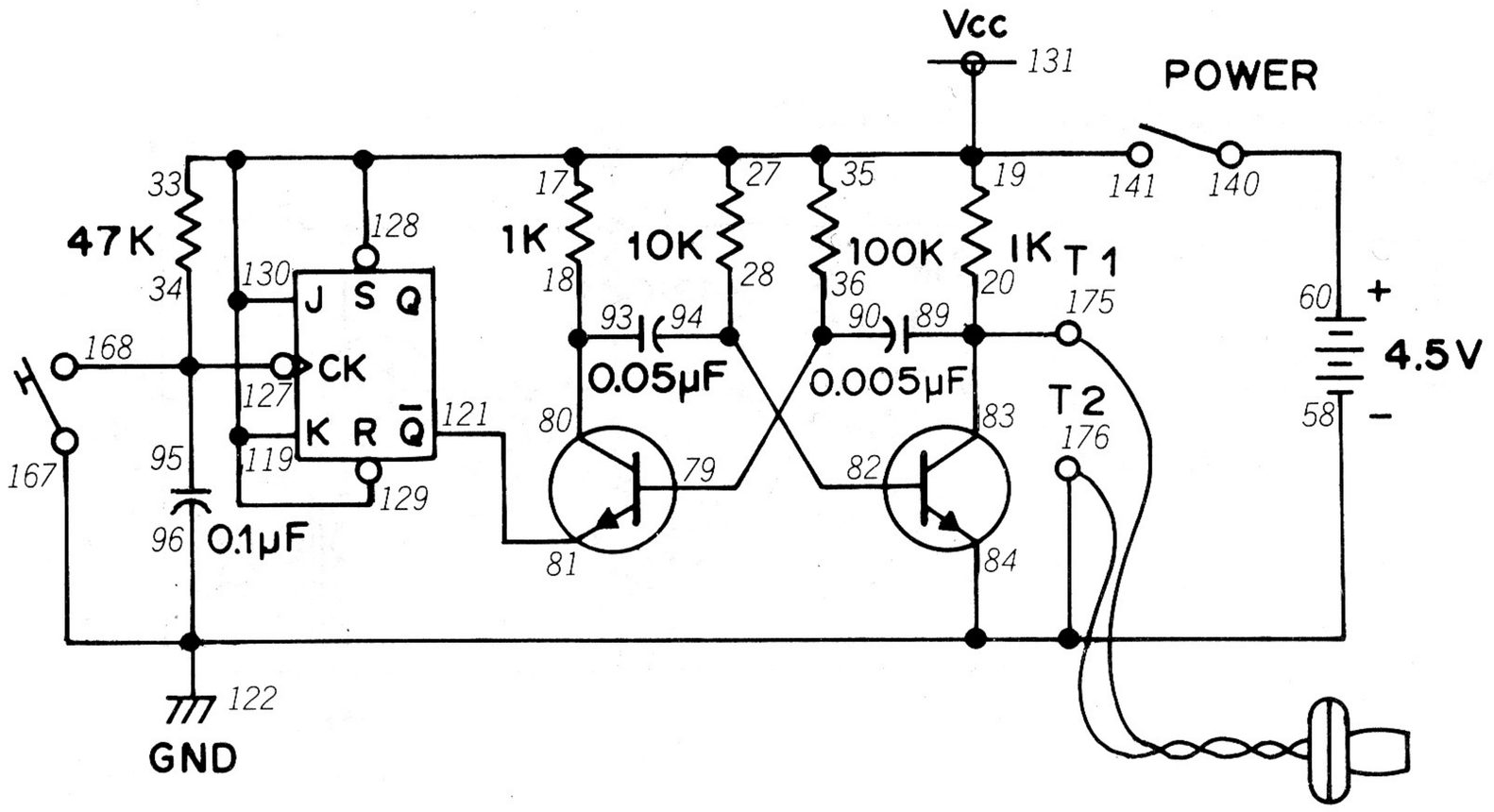

Here's another marriage of digital and analog electronics. Take a good look at the schematic – can you guess how this circuit works even before you build it? Make a mental note of your guess.

To listen to this Project, connect the Earphone to Terminals 1 and 2 and turn the Control Knob to ON. Can you guess what happens when you press the Key and then release it? What happens when you press it again? If you guessed right about how this circuit works, those two questions should be a cinch.

We don't want to keep you in suspense, so press the Key and release it. Listen for a few seconds and then press and release the Key again. Now what happens?

By now you probably had no problem recognizing the multivibrator circuit. But did you notice the R-S flip-flop integrated circuit? And, as you saw back in Project 70, an R-S flip-flop "remembers." Press the Key once, and the R-S flip-flop *sets.* You heard sounds in the Earphone. When you pressed the Key a second time, the sounds stopped. This was because the circuit *reset.*

The R-S flip-flop circuit we looked at back in Project 70 used two transistors and other parts. Here we use two transistors in the multivibrator circuit and an integrated circuit for the flip-flop. Does this give you any further hints about what's inside those integrated circuits? *(It should!)* Have you changed your guess about what's inside an IC and how they work? If so, make a note of what you think now!

NOTES

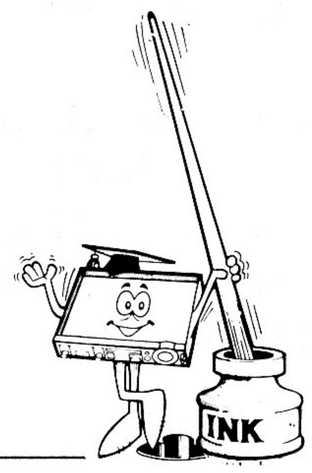

Wiring Sequence

18-93-80, 20-89-83-175, 28-94-82, 34-95-127-168, 36-79-90, 58-122-176-167-84-96, 60-140, 81-121, 131-130-129-128-119-33-35-27-17-19-141, T1-EARPHONE-T2.

109. SOUND MACHINE III

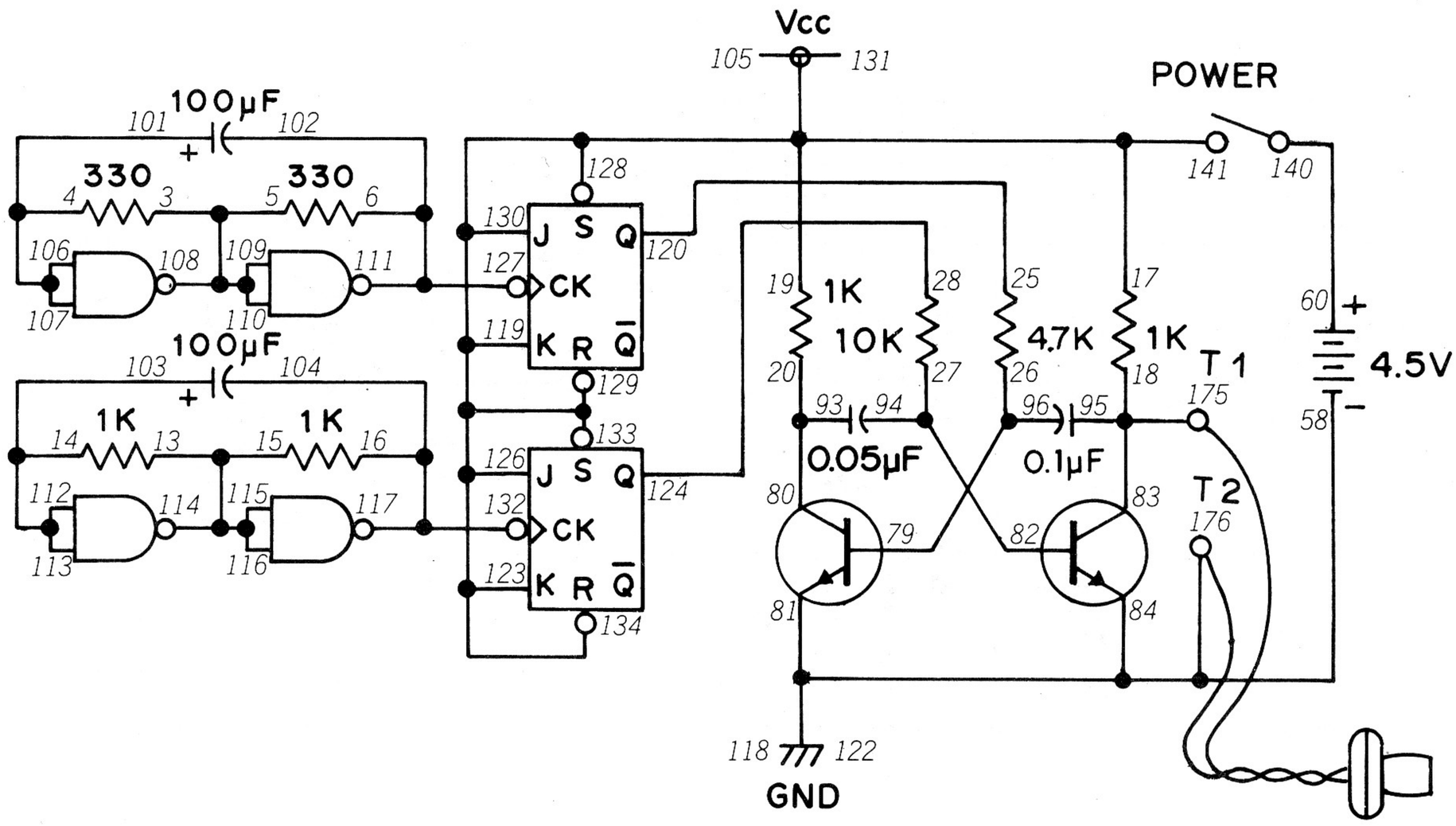

In Project 107 we saw a multivibrator circuit used with NAND gates. Then in Project 108 we found a multivibrator used with an R-S flip-flop. What do you suppose would happen if we tried to combine these two Projects into a single circuit? Make a quick mental note of what you suspect, because this Project will let us find out!

Look at the schematic for this Project. You'll see that the NAND gates are connected to the R-S flip-flops at a point known as CK. The output from the NAND gates control the set/reset functions of the R-S flip-flops. Notice how the output of the R-S flip-flops go to the bases of the Transistors in the multivibrator circuit. What effect do you suppose this has upon the operation of the multivibrator?

Take care as you make the wiring connections for this Project – it's easy to make a mistake with so many connections. Connect the Earphone to Terminals 1 and 2 and turn the Control Knob to ON. What kind of sounds do you hear?

The strange sounds you hear are produced by the digital portion of the circuit controlling the operation of the multivibrator. You can also alter the operation of the NAND gates (and their effect on the rest of the circuit) by substituting different values of capacitors in place of the 100 μF ones.

As you might have suspected, the 100 μF capacitors control the NAND gates by charging and discharging, which turns the NAND gates on and off. The NAND gates set or eset the R-S flip-flop, whose output then goes to the bases of the transistors, which then .....

See how everything fits together? Like we said earlier – even complex devices are made up of a few basic circuits.

NOTES

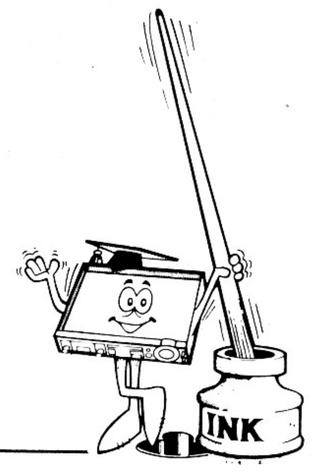

Wiring Sequence

3-5-108-109-110, 4-101-106-107, 6-102-127-111, 13-15-114-115-116, 14-103-112-113, 16-104-132-117, 18-95-83-175, 20-93-80, 25-120, 26-79-96, 27-94-82, 28-124, 60-140, 81-84-122-58-118-176, 128-129-130-131-133-134-126-123-119-105-17-19-141, T1-EARPHONE-T2.

110. ELECTRONIC COIN TOSS

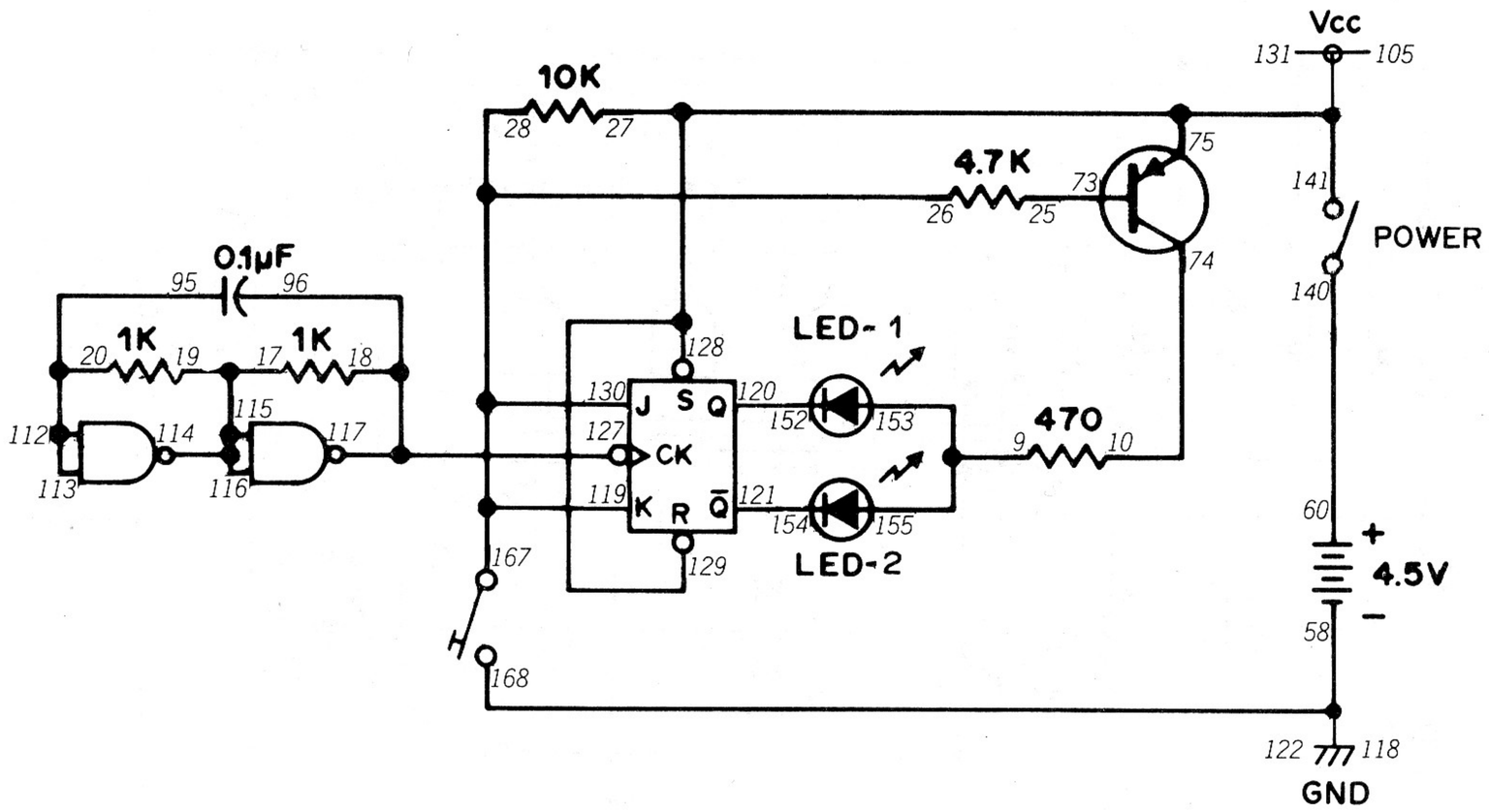

Do you hate to make decisions? Is so, you'll love the next several Projects! This group of "electronic decisionmakers" can be used in games in place of dice. And you can make up your own games using these circuits.

Since these Projects all "make decisions", you might expect them all to involve digital electronics. And you're right! Take a look at the schematic diagram for this Project. You'll see that it involves both NAND gates and the R-S flip-flop. Can you guess how this circuit works before you build it?

When you finish building this Project, set the Control knob clockwise to ON. Press the Key once. Observe what happens to LEDs 1 and 2. Press the Key several times. What pattern, if any, can you detect in the lighting of the two LEDs?

As you probably suspect, while the Key is open, the R-S flip-flop is rapidly setting and resetting. This does not affect the LEDs, since the 2SA transistor is "off" while the Key is open. By pressing the Key, you do two things; turn the 2SA transistor "on" (and thus provide a current path for the LEDs), and stop the R-S flip-flop's continuous setting and resetting. One LED is set while the other is reset. Does this happen at random or is there a pattern? Try this experiment to find out: press the Key fifty times and record which LED lights. Does each LED light up 25 times? It not, are the results almost equal?

A truly random result would be each LED lighting exactly 25 times. It's not unusual for this to vary a bit, such as one LED lighting 27 times and the other 23 times. But if there's a big difference – such as one LED lighting 40 times and the other only lighting 10 times – that indicates the circuit isn't really random. Would you say this Project is or isn't random?

NOTES

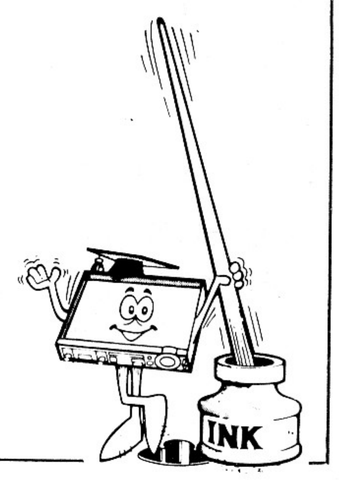

Wiring Sequence

9-153-155, 10-74, 17-19-114-115-116, 18-96-127-117, 20-95-112-113, 25-73, 26-28-119-130-167, 27-75-141-128-129-131-105, 58-118-122-168, 60-140, 120-152, 121-154.

111. ELECTRONIC COIN TOSS II

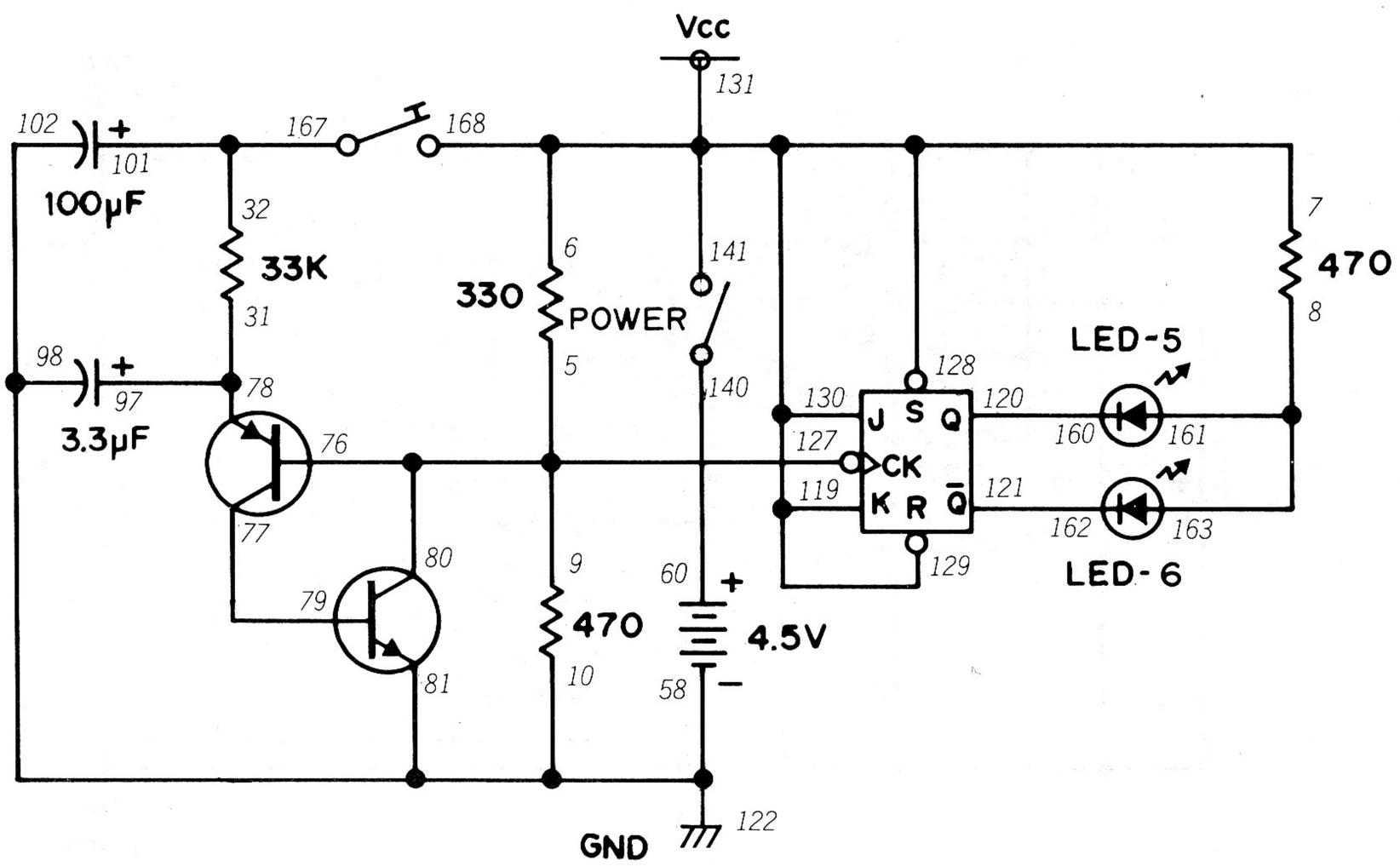

Here's a different version of our last Project. If you aren't happy with the decisions the last circuit made, then try this one!

You use this Project almost like Project 110. Turn the Control Knob to ON. Now press the Key. The two LEDs will take turns lighting and going off. When you release the Key, only one LED will remain lit.

You can see by the schematic that this circuit uses the R-S flip-flop integrated circuit. Look at how the LEDs are connected – one is connected to a point called Q while the other is connected to a point called $\overline{Q}$. Electronics engineers call Q the *set output* while the $\overline{Q}$ output is called the *reset output.*

Remember what we mean when we say a digital device is 0 or 1? (If you don't, look back at Project 63.) With an R-S flip-flop, we say the flip-flop is *set* if Q is 1 and $\overline{Q}$ is 0. But if Q is 0 and $\overline{Q}$ is 1, then the flip-flop is *reset.*

Armed with that bit of knowledge, try your hand at this: which LED is lit if the flip-flop is set? Which one is lit if it's reset?

Can you also figure out how or why the R-S flip-flop sets and resets? Do you suppose it has anything to do with the connection point marked CK?

Try the same experiment you did with Project 110 to see if this is a random circuit. Is it more or less random than the previous Project? Or are both the same? *(If you can't decide, try letting one of the two Projects decide for you!)*

NOTES

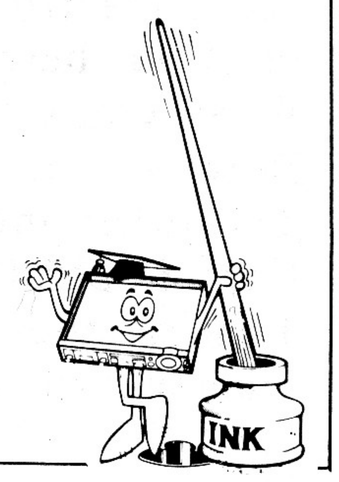

Wiring Sequence

5-9-76-80-127, 6-7-141-168-128-129-130-131-119, 8-161-163, 10-81-98-102-122-58, 31-78-97, 32-101-167, 60-140, 77-79, 120-160, 121-162.

112. EVEN OR ODD

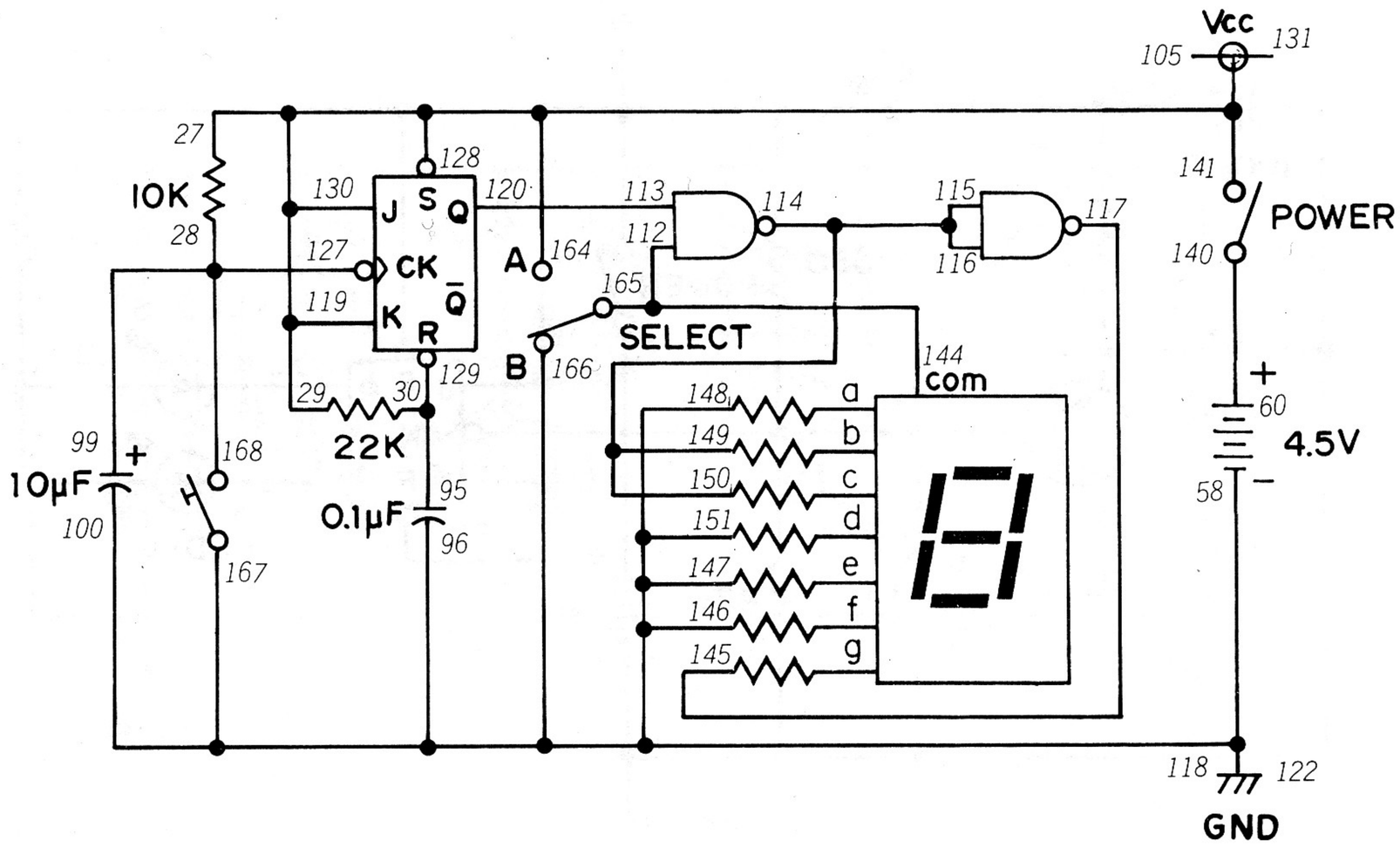

If you have a decision that comes down to either "even" or "odd", let this Project decide for you!

After building this project, set the Select Switch to A. Turn the Control Knob clockwise to ON.

You may see the letter "E" on the LED display. If not, press the key and "E" will appear on the Display. Now set the Select Switch to B and press the key (not rapidly) a few times. Set the Select Switch to A and watch the Display. You'll see either "E" (for even) or "O" (for odd) appear.

Look at the schematic for this Project. You'll see that when you press the Key and then release it you send and then interrupt current flow to a point called **CK** on the R-S flip-flop. CK stands for **clock**. It's the portion of the R-S flip-flop that controls whether the flip-flop sets or resets.

In most cases the clock signal is provided by another electronic circuit (multivibrator, AND gate, etc.) but here you provide it by pressing the Key. When you set the Select Switch to A, current can flow to one of the inputs of the NAND gates. The other input comes from Q of the R-S flip-flop. Depending on whether these inputs are 0 or 1 (remember how a NAND gate works?), certain segments of the LED Digital Display are lit or stay dark. In turn this spells out "E" or "O" on the Display.

Since you'll be providing the clock signal instead of an electronic circuit, repeat the same experiment you did in Projects 110 and 111. Is this circuit any more or less random than the previous two circuits?

NOTES

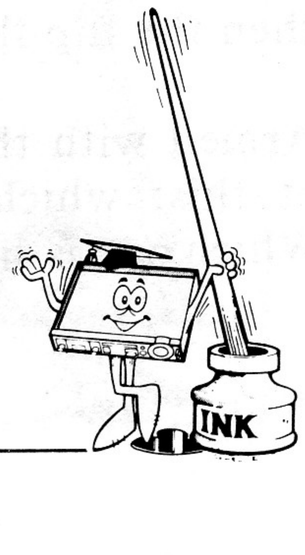

Wiring Sequence

27-29-141-164-128-130-131-119-105, 28-99-127-168, 30-95-129, 58-118-122-167-166-100-96-148-151-147-146, 60-140, 112-165-144, 113-120, 116-115-114-149-150, 117-145.

113. ELECTRONIC ROULETTE

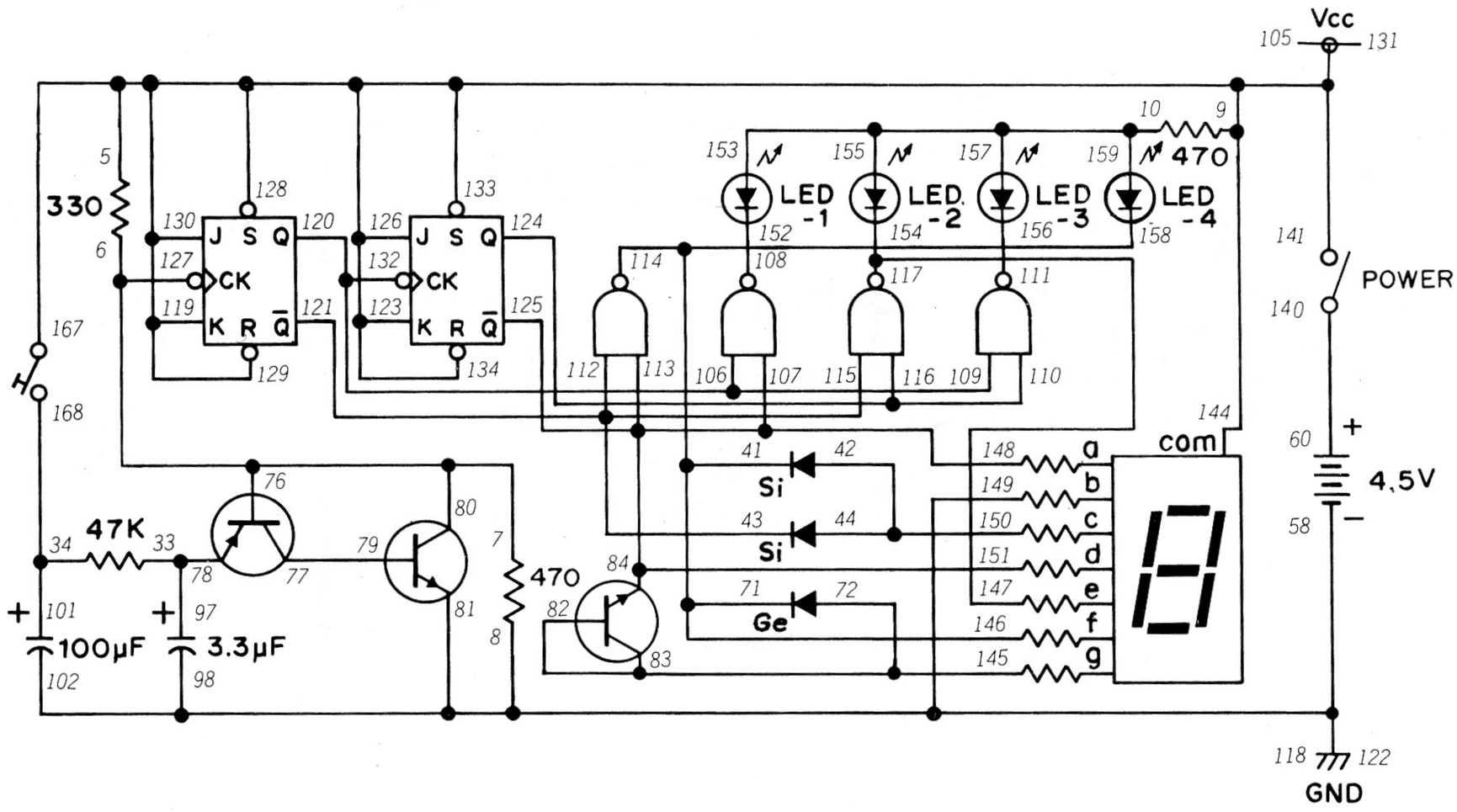

The last three Projects were great if you had to choose between two things ..... but suppose you have four choices. Then what? Try building this Project.

You'll find the general principle behind this circuit the same as the previous three. Be careful in constructing this one – there are many wiring connections. Take your time and double-check your work. When you're finished, turn the Control Knob to ON and press the Key. Hold it down for a few seconds. You'll see the four LEDs flash off and on rapidly. On the Display you'll see the numbers 1 through 4 indicated in order very rapidly. Now release the Key. The LEDs and Display will "slow down" and finally stop at one LED and its corresponding number.

As you might suspect, the two Transistors generate the clock signal for the R-S flip-flops. Note from the schematic that the clock signal for the second R-S flip-flop comes from output Q of the first flip-flop. The combined outputs of the R-S flip-flops then are applied to the NAND gates, which in turn light and turn off the LEDs. As you might also suspect, the discharge of the 100 μF capacitor controls how long the clock signal is generated.

Notice how many R-S flop-flops and NAND gates were used in this circuit. You see, there are actually two R-S flip-flops in the Dual J–K Flip-Flop IC and four NAND gates in the Quad 2-input NAND IC. That's what the "integrated" means in integrated circuit – there are actually several circuits inside each IC!

(Check the notes you made about integrated circuits ..... did you manage to figure out the correct answer?)

NOTES

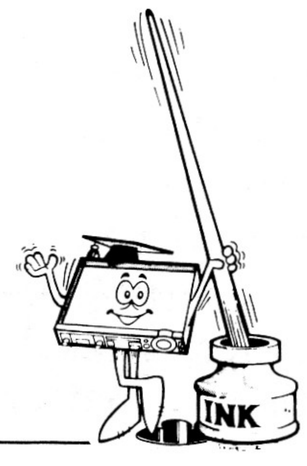

Wiring Sequence

5-9-141-144-167-128-129-130-131-133-134-126-123-119-105, 7-6-76-80-127, 8-149-81-98-102-122-118-58, 10-153-155-157-159, 33-78-97, 34-101-168, 42-44-150, 43-112-121-115, 60-140, 71-41-114-158-146, 72-145-82-83, 77-79, 108-152, 109-106-120-132, 110-116-124, 111-156, 117-154-147, 125-113-107-84-148-151.

114. ELECTRONIC DICE

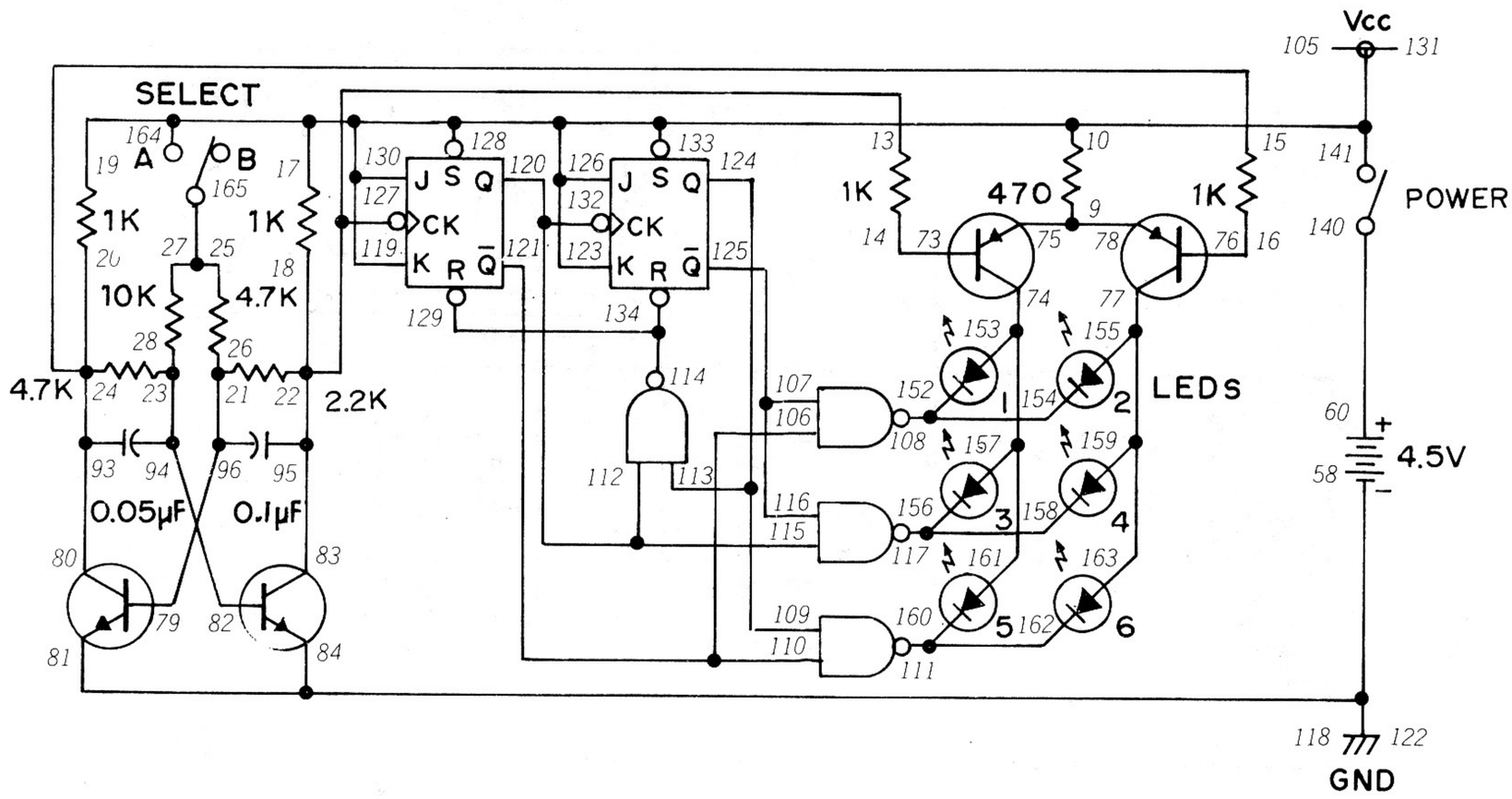

Sometimes you'll be faced with decisions where there's six different choices. That's when this Project will come in handy – it can randomly light one of six LEDs!

Take your time when building this circuit – it's easy to make a mistake with so many connections. Set the Select Switch to A. Now set the Control Knob to ON. You'll see LEDs 1 through 6 lighting faintly. Actually, these LEDs are blinking on and off in order but the speed is very, very rapid – so you can't see them blinking. Now set the Select Switch to B. Only one of the LEDs will remain lit.

You can see the multivibrator circuit along with the R-S flip-flops and NAND gates. This is a *counter* circuit like we've mentioned in the past. Can you imagine how this circuit manages to count? Take a good look at the schematic ..... and it might help to review what we found out about R-S flip-flops back in Project 112. *(Another hint – remember how multivibrators and NAND gates work too!)* Be sure to make a note of how you think this circuit works.

You might also want to see if this is a random circuit like you did with earlier Project. Since there are more LEDs in this Project, you might want to use 100 trials instead of the 50 you used earlier.

Is this circuit truly random? Does changing the values of the 0.05 μF capacitors affect the operation of this circuit in any way?

NOTES

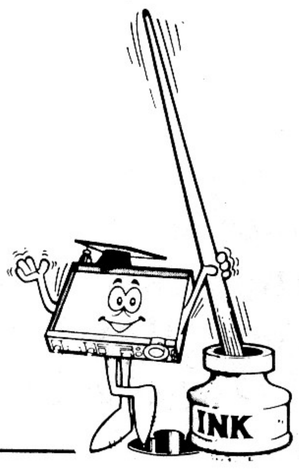

Wiring Sequence

9-75-78, 14-73, 16-76, 17-19-10-141-164-128-130-131-133-126-123-119-105, 21-26-79-96, 22-13-18-95-83-127, 23-28-94-82, 24-15-20-93-80, 25-27-165, 58-118-122-84-81, 60-140, 74-153-157-161, 77-155-159-163, 107-116-125, 108-154-152, 110-106-121, 111-162-160, 112-120-115-132, 113-109-124, 114-129-134, 117-158-156.

115. ROULETTE WITH SOUND

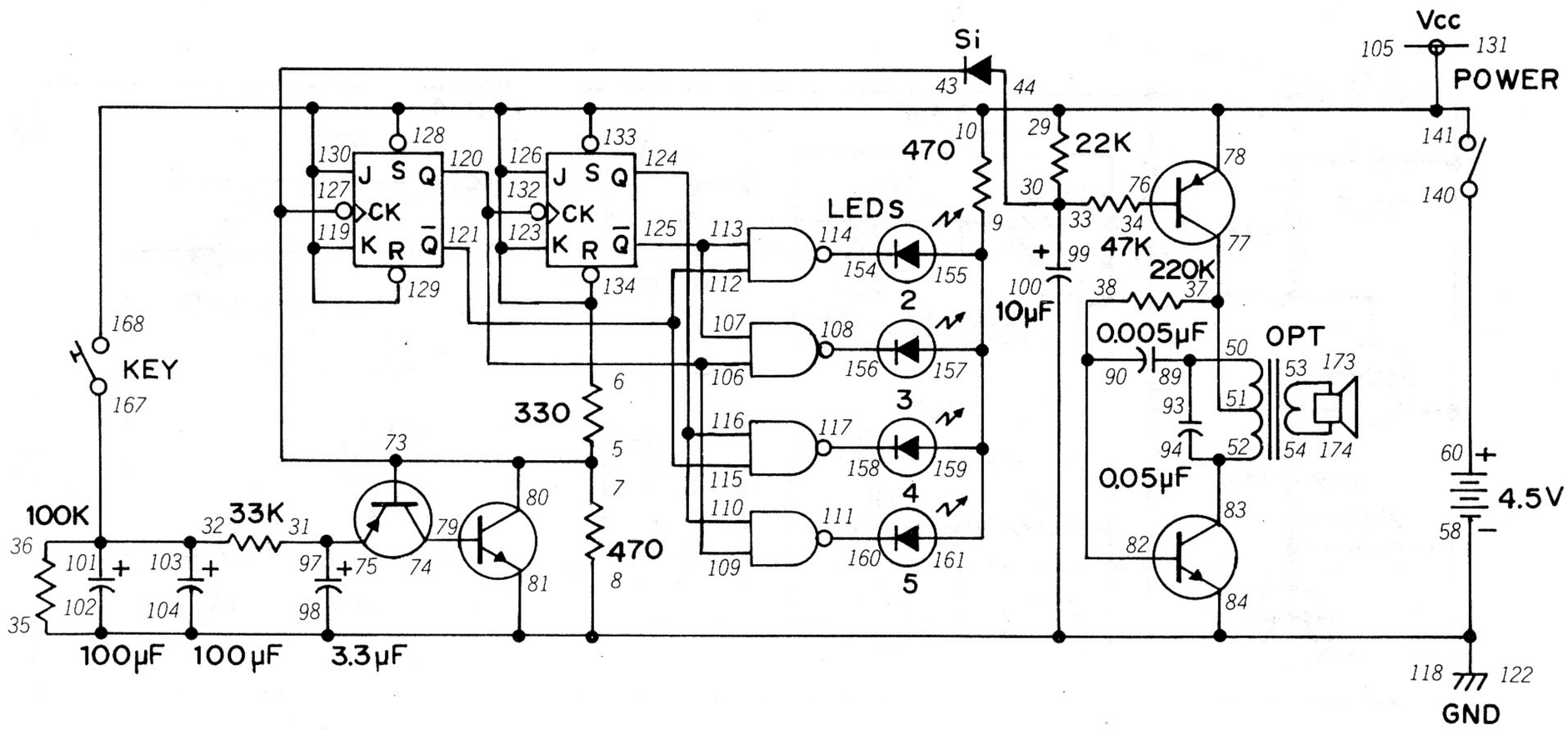

This Project adds the dimension of sound to the decision-making process. It's also another good example of how different circuits can be joined together to make more complex devices.

Since the wiring for this Project gets a bit complicated, take your time when making the connections and double-check your work. When you finish, turn the Control Knob clockwise to ON. Press the Key and LEDs 2, 3, 4 and 5 will begin to flash one after the other. You'll also hear a sound from the Speaker each time a LED lights.

Now release the Key. The LED flashing will begin to "slow down" as will the sound from the Speaker. Eventually only one LED will be lit out of the four.

You probably recognized the multivibrator circuit in the schematic quickly. Its output goes to the digital portion of the circuit, made up of the flip-flops and the NAND gates. These circuits make up a counter that lights each LED in turn and also drives the audio oscillator section. This is why you hear sound each time one of the LEDs lights.

Take a good look at how the two flip-flops are connected. Notice how the Q output of one flip-flop serves as the clock for the second input. A flip-flop can't change to reset or set unless the clock signal is input, *even if the other two inputs change.*

Now think about that a minute while examining the possible outputs of the two flip-flops. Look at how those outputs are combined in the NAND gates. Does this give you any clue about how a counter "counts" like it does? Be sure to make a note about what you think – we'll see later how close you come to the truth.

NOTES

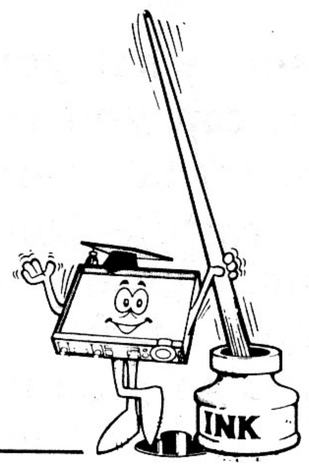

Wiring Sequence

5-7-73-43-80-127, 6-10-29-78-141-168-128-129-130-131-133-134-126-123-119-105, 8-35-81-84-98-100-104-102-122-118-58, 9-155-157-159-161, 31-75-97, 32-36-101-103-167, 33-30-44-99, 34-76, 50-93-89, 51-37-77, 52-83-94, 53-173, 54-174, 60-140, 74-79, 82-38-90, 107-113-125, 108-156, 109-106-120-132, 110-116-124, 111-160, 114-154, 115-112-121, 117-158.

116. THE LIGHT FANTASTIC

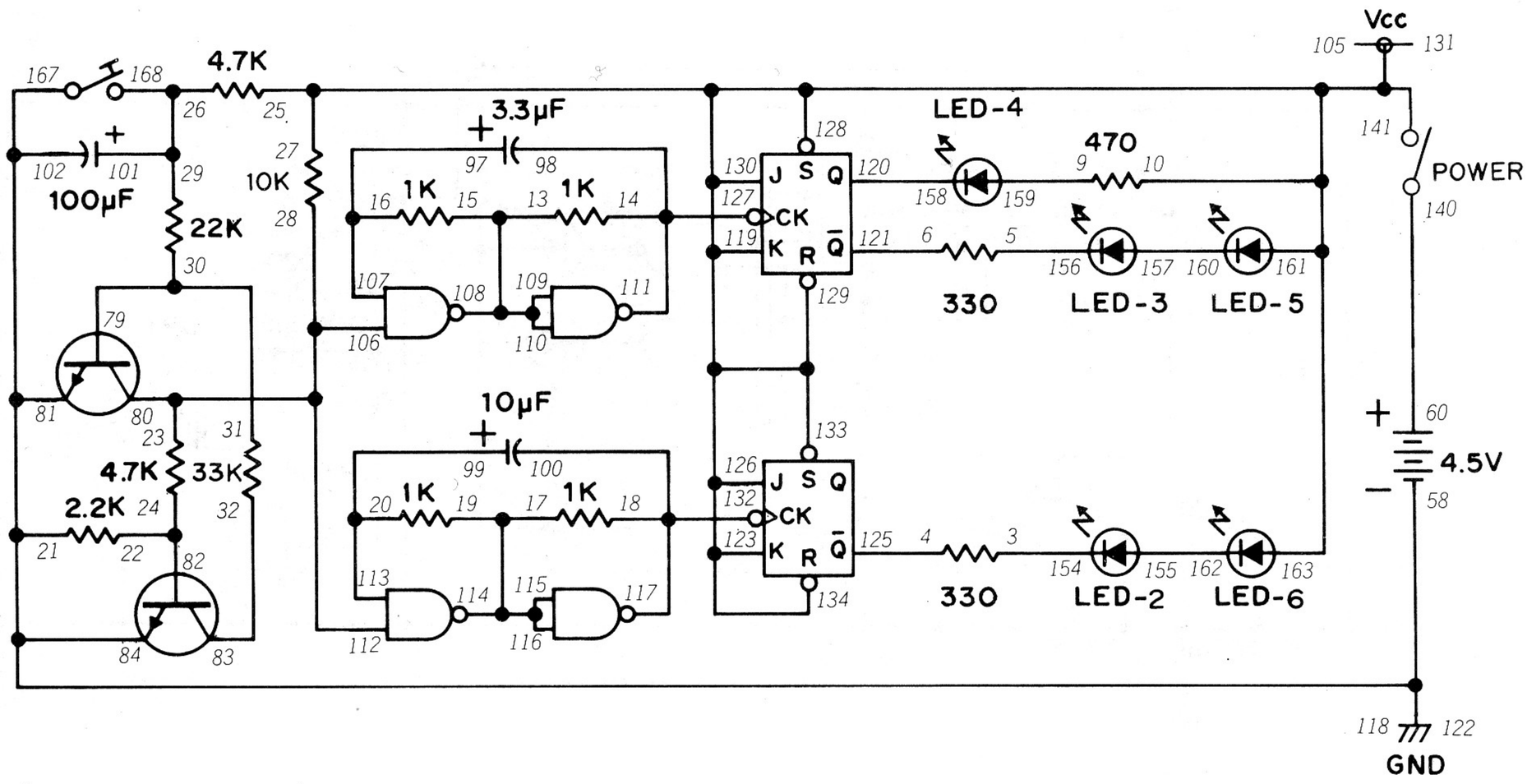

In the last Project we used NAND gates to combine the outputs of flip-flops. There's no law that says NAND gates must always follow flip-flops in a circuit – just look at the schematic for this Project and see.

You'll notice that this Project uses a two transistor circuit to drive the NAND gates. Have you seen this particular circuit in other Projects? *(Hint – it's a type of oscillator.)* The output is combined by the NAND gates and then goes to the flip-flops. Note that the NAND gates control the clock signal for each flip-flop, meaning that the NAND gates really control when the different LEDs light up.

After wiring this Project, turn the Control Knob to the right to switch power ON and press the Key. The LEDs will begin lighting up in certain patterns. Now release the Key. Notice which LED or LEDs remain lit. Try pressing and releasing the Key several times – is the result truly random?

Using what you've found out about flip-flops so far, can you tell which outputs are 0 and which are 1 when various LEDs are lit *(now that should be easy!)*. Once you figure that out, put your thinking cap on and try to figure out how the output of the oscillator circuit combines in the NAND gates to produce the clock signal for the flip-flops! (Don't feel bad if you have trouble doing that ..... it isn't easy to keep track of what goes on inside those NANDs. But give it your best shot and make a note of what you think happens .....)

NOTES

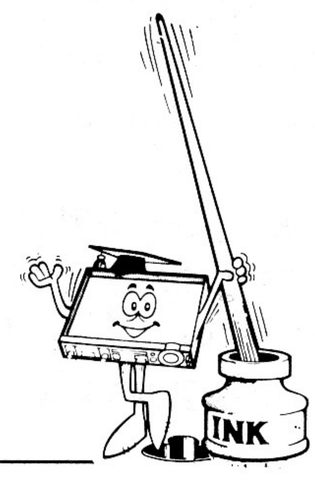

Wiring Sequence

3-154, 4-125, 5-156, 6-121, 9-159, 13-15-108-109-110, 14-98-127-111, 16-97-107, 17-19-114-115-116, 18-100-132-117, 20-99-113, 21-81-84-102-167-122-118-58, 22-24-82, 23-28-80-112-106, 25-27-10-141-161-163-128-129-130-131-133-134-126-123-119-105, 26-29-101-168, 31-30-79, 32-83, 60-140, 120-158, 155-162, 157-160.

117. ESP TESTER

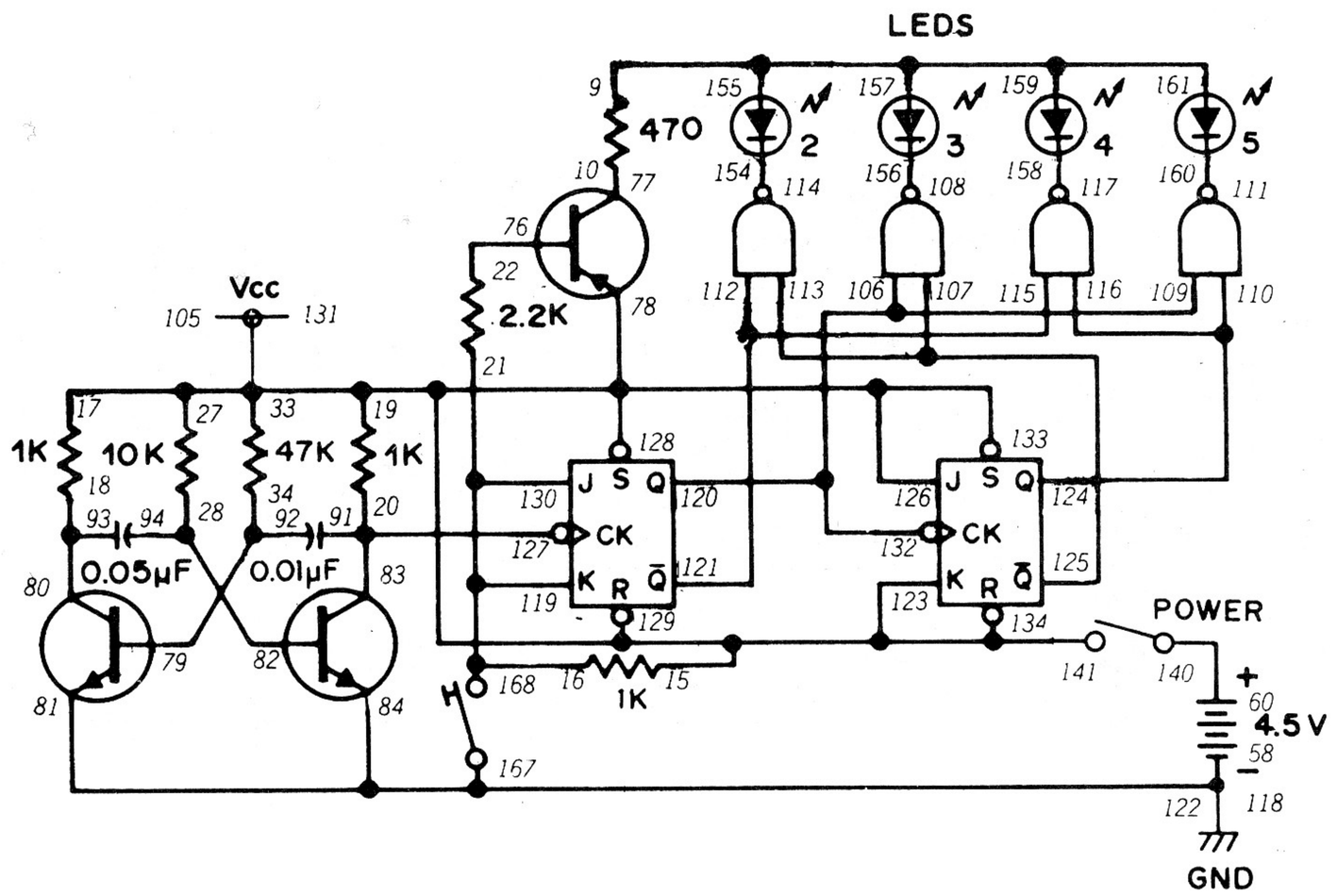

Do you believe in ESP (extrasensory perception)? Before you answer, why not investigate the subject a little more using this Project?

To use this Project, turn the Control Knob to ON. Press the Key and hold it down for a few seconds. Make a guess as to which LED (2, 3, 4 or 5) will light up. Then release the Key. Were you right? Try this 100 times, keeping a record of your guess and the actual result.

You should have no trouble by now recognizing the different sections that make up this Project. The multivibrator feeds its output into the flip-flops, which together make up a counter circuit. The output of the flip-flops go to the four NAND gates, which are connected to the four LEOs. The four NANDs make up what is known as a **decoder.** Can you guess how it got this name? *(Do you suppose it could have anything with to do with "decoding" the output of the counter?)*

What kind of results did you get when you tried the experiment 100 times? If the circuit is truly random, each of the four LEDs should have lit 25 times each. Don't be surprised if some lit more often than others; this is normal for only 100 times. How often were you able to guess which LED was going to be lit? Sheer luck would let you guess correctly about 20 or 30 times. You should not decide you have ESP until you can correctly guess 50 out of each 100 trials ..... in several tests. Ask your teacher or librarian for some good books about ESP. Read some of these books before making a final decision on whether you have ESP!

NOTES

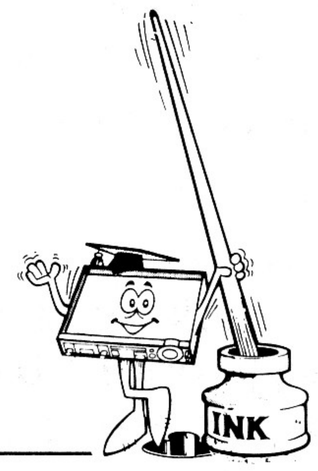

Wiring Sequence

9-155-157-159-161, 10-77, 18-93-80, 20-91-83-127, 21-16-119-130-168, 22-76, 28-94-82, 33-27-15-17-19-78-141-128-129-131-133-134-126-123-105, 34-79-92, 58-118-122-84-81-167, 60-140, 107-113-125, 108-156, 109-106-120-132, 110-116-124, 111-160, 112-121-115, 114-154, 117-158.

118. CLOSE-IN

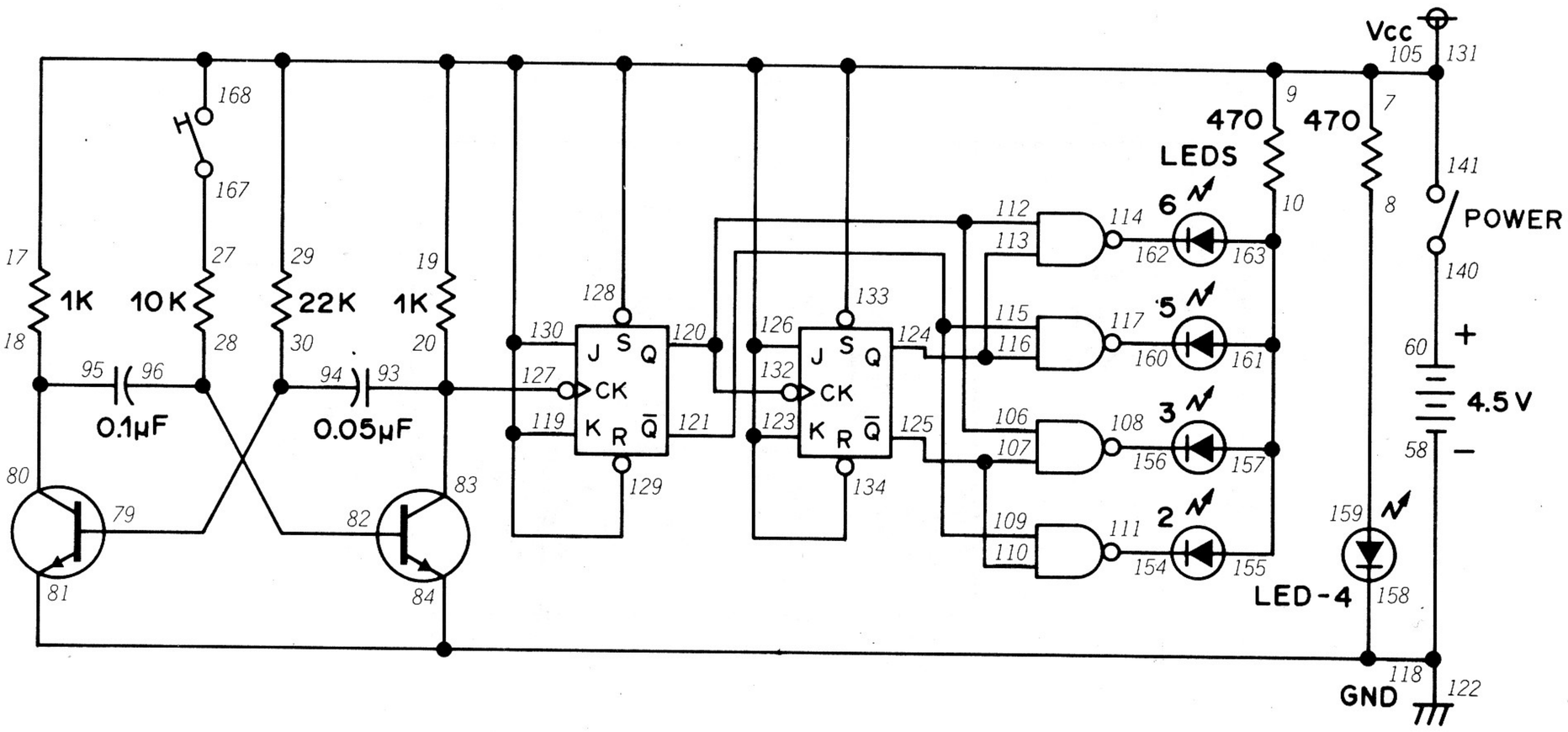

This is a Project that's a bit different from the last few. This one too will help you make a decision .... like whether to go to the left or right.

After you finish the wiring connections, turn the Control Knob to ON. You'll notice that LED 4 will light up. Now press the Key. You'll see LEDs 2, 3, 5 and 6 light at what seems to be "half brightness". Now release the Key. What happens?

You saw that only an LED other than LED 4 lit up. Which one was it? Now press and release the Key ..... and try it again ..... and again. Does a different LED light up each time or does the same one light up over and over?

You saw that only an LED other than LED 4 lit works by looking at the schematic. You'll notice that LED 4 is a separate circuit of its own, not affected by the rest of the Project. That's why LED 4 stays lit all the time. The rest of the Project is the multivibrator/counter/decoder arrangement we've seen in other Projects. Again, can you figure out how the outputs of the flip-flop are combined in the NAND gates to light just one of the LEDs? Be sure to make a note of your guess.

You can also use this Project in games by letting the position of the lit LED determine moves or the winner in a game. The winner could be whoever can get a LED to light closest to LED 4, for example.

NOTES

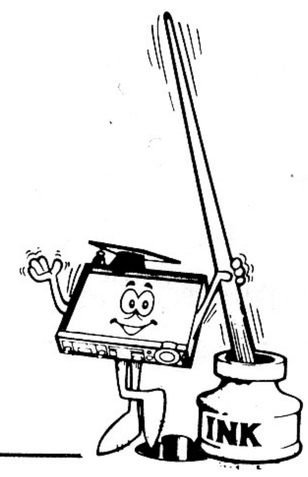

Wiring Sequence

7-9-17-19-29-141-168-128-129-130-131-133-134-126-123-119-105, 8-159, 10-155-157-161-163, 18-95-80, 20-93-83-127, 27-167, 28-82-96, 30-79-94, 58-118-122-84-81-158, 60-140, 106-112-120-132, 107-110-125, 108-156, 109-115-121, 111-154, 113-116-124, 114-162, 117-160

119. THREE-INPUT OR CIRCUIT

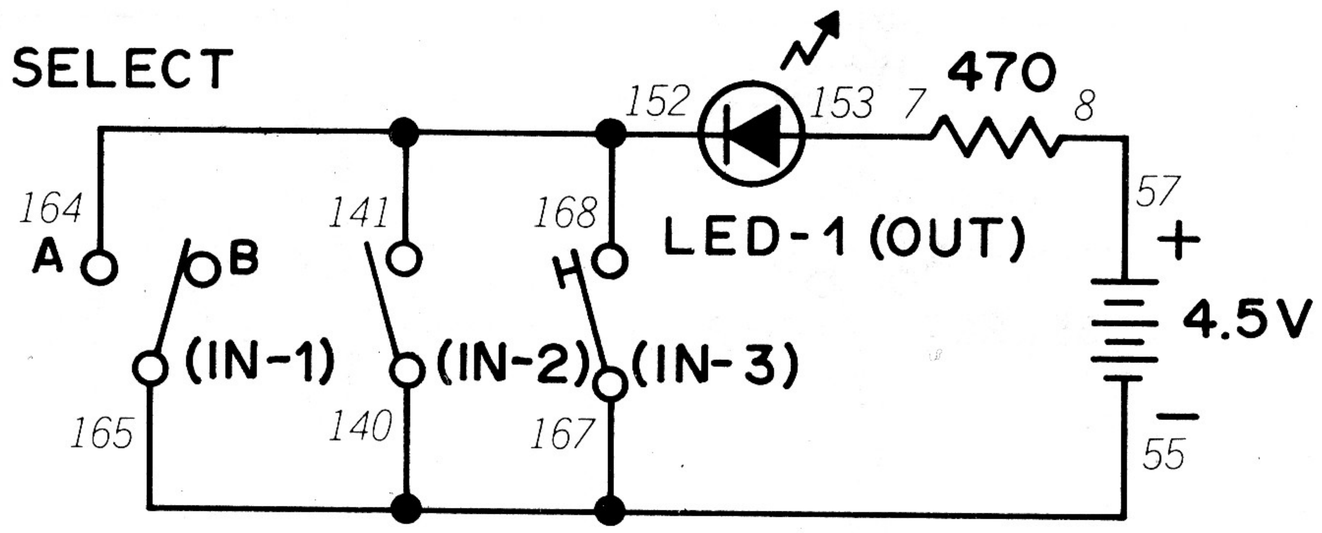

Back in Project 64 you got to see how an OR circuit works. That OR circuit only had two inputs. OR circuits can have more than just two inputs, as this Project will show you.

Before building this circuit, set the Select Switch to B and the Control Knob to OFF. When you finish the wiring connections, press the Key. What happens? Release the Key and turn the Control Knob clockwise to switch power ON. What happens now? Turn the Control Knob to OFF and set the Select Switch to A. What's the result?

Now try holding the Key down while setting both the Select Switch and Control Knob to their two positions. Try other combinations of the two Switches without pressing the Key. What do you find happening?

This Project was just our way of reminding you of how an OR circuit works: *the output goes to 1 (turns on) if any or all of the inputs go to 1.* You also can see that an OR gate can have several inputs – in fact, most do.

You might want to set aside a special section in your notebook and the next several Projects. We've been using digital circuits for a long time. Now we're going to take a look at them in depth.

NOTES

Wiring Sequence

7-153, 8-57, 55-167-140-165, 152-168-141-164.

120. THREE-INPUT AND CIRCUIT

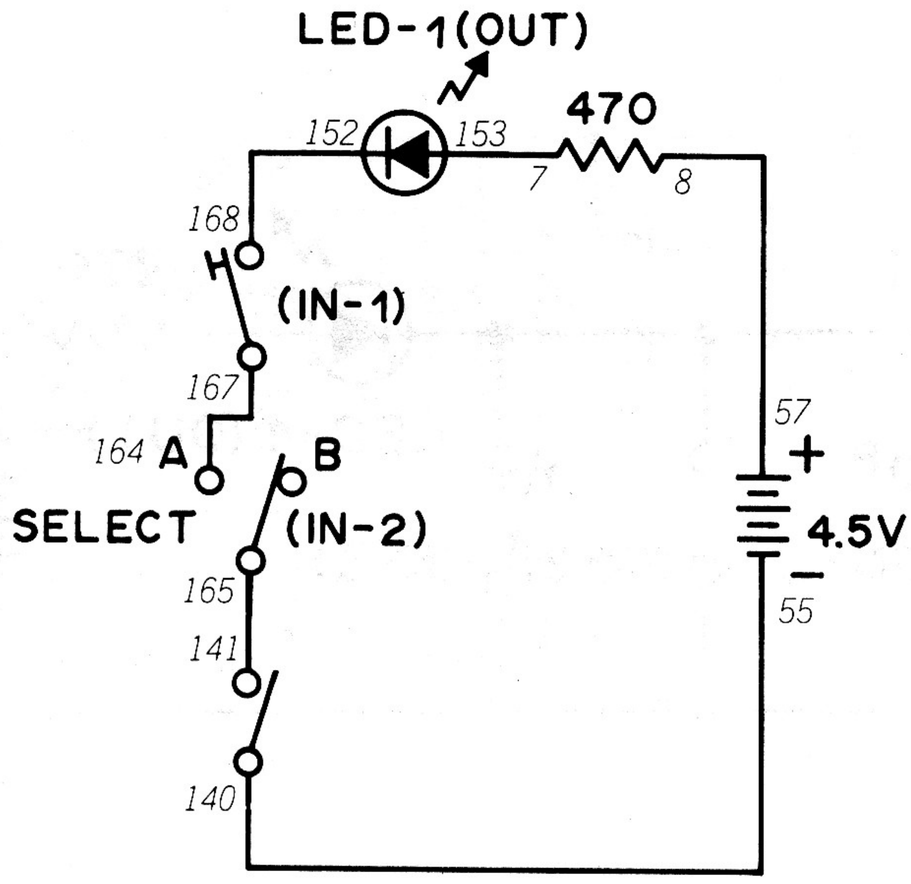

In Project 65 we first met the AND circuit. That one just had two inputs. Think that an AND circuit, like an OR circuit, could have more than just two inputs? Here's a Project that will let us find out .....

Before making any wiring connections, turn the Control Knob to OFF and the Select Switch to B. After building the circuit, press the Key. What happens? Release the Key turn the Control Knob to ON. Do you see any results? Set the Control Knob back to OFF and set the Select Switch to A. Do you see anything happening?

Now set the Control Knob back to ON and the Select Switch to A. Press the Key and look at LED 1. What do you see?

This Project again shows that an AND circuit is one whose output is 1 if (and only if) **all** inputs are also 1. And you can see that an AND gate can have more than two inputs.

NOTES

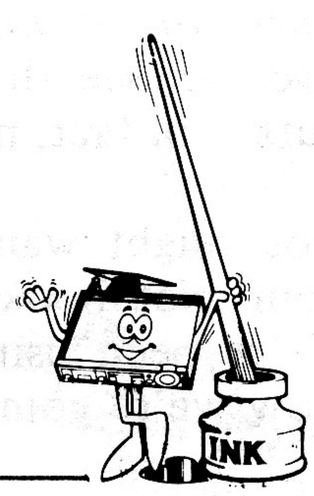

Wiring Sequence

7-153, 8-57, 55-140, 141-165, 152-168, 164-167

121. RTL INVERTER

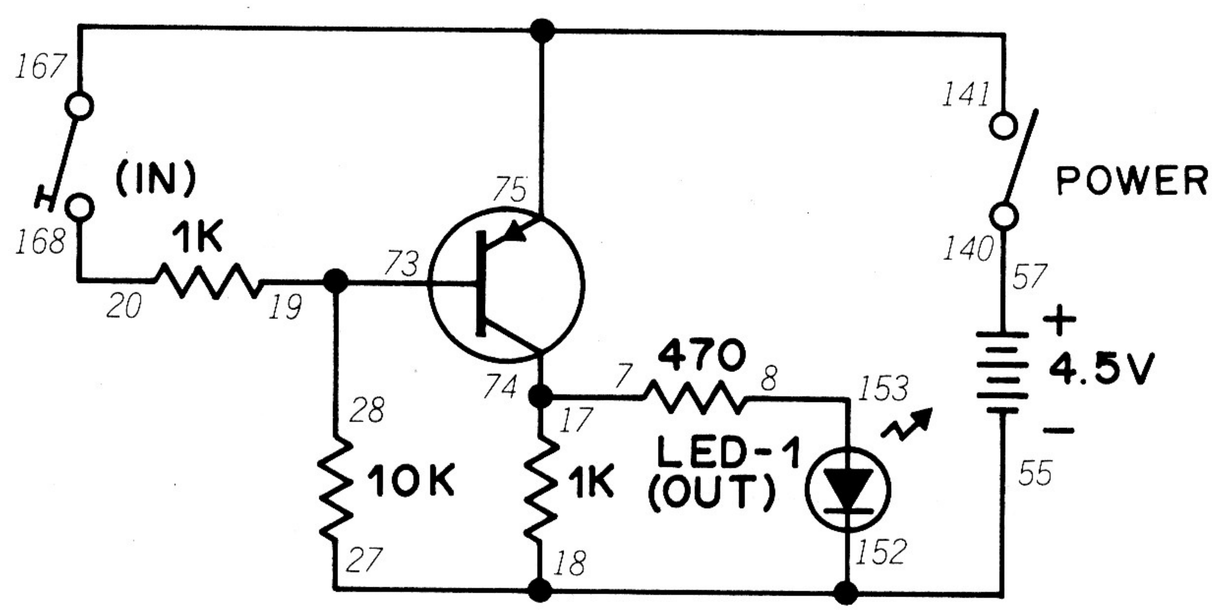

So far we've played with logic circuits made up of switches to show how various circuits such as NAND, NOR, AND, etc., work. Of course, digital circuits in the real world aren't made of switches– they use transistors, diodes, resistors, etc., just like other electronic circuits. This Project will let us take a look at a "real" all-electronic digital circuit.

This circuit is another version of the inverter we first saw back in Project 63. It's called an **RTL** inverter because it makes use of *resistor-transistor logic.* It's called that because the circuit is made of resistors and transistors, *logically!* (Sorry about that ..... but we couldn't pass up that pun!)

When you turn the Control Knob to ON, LED 1 will be lit (and that means the output is 1). Since you're not pressing the Key, the input is 0. Press the Key and you'll make the input 1. LED 1 immediately goes out, making the output 0. That's what an inveter does – reverses an input.

This circuit uses a transistor's ability to function as a switch (you might want to look back at Project 57 in case you've forgotten). Of course, we don't have to always press the Key to use a transistor as a switch – we could use the output from another circuit, couldn't we? *(Of course we could!)*

NOTES

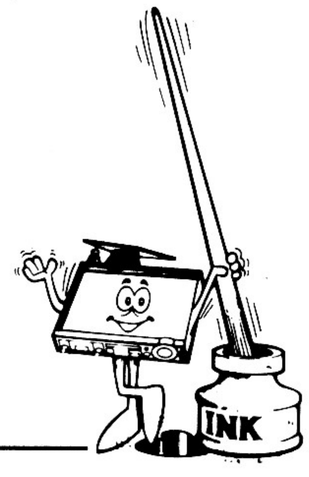

Wiring Sequence

7-74-17, 8-153, 19-73-28, 20-168, 55-152-18-27, 57-140, 141-75-167.

122. RTL BUFFER

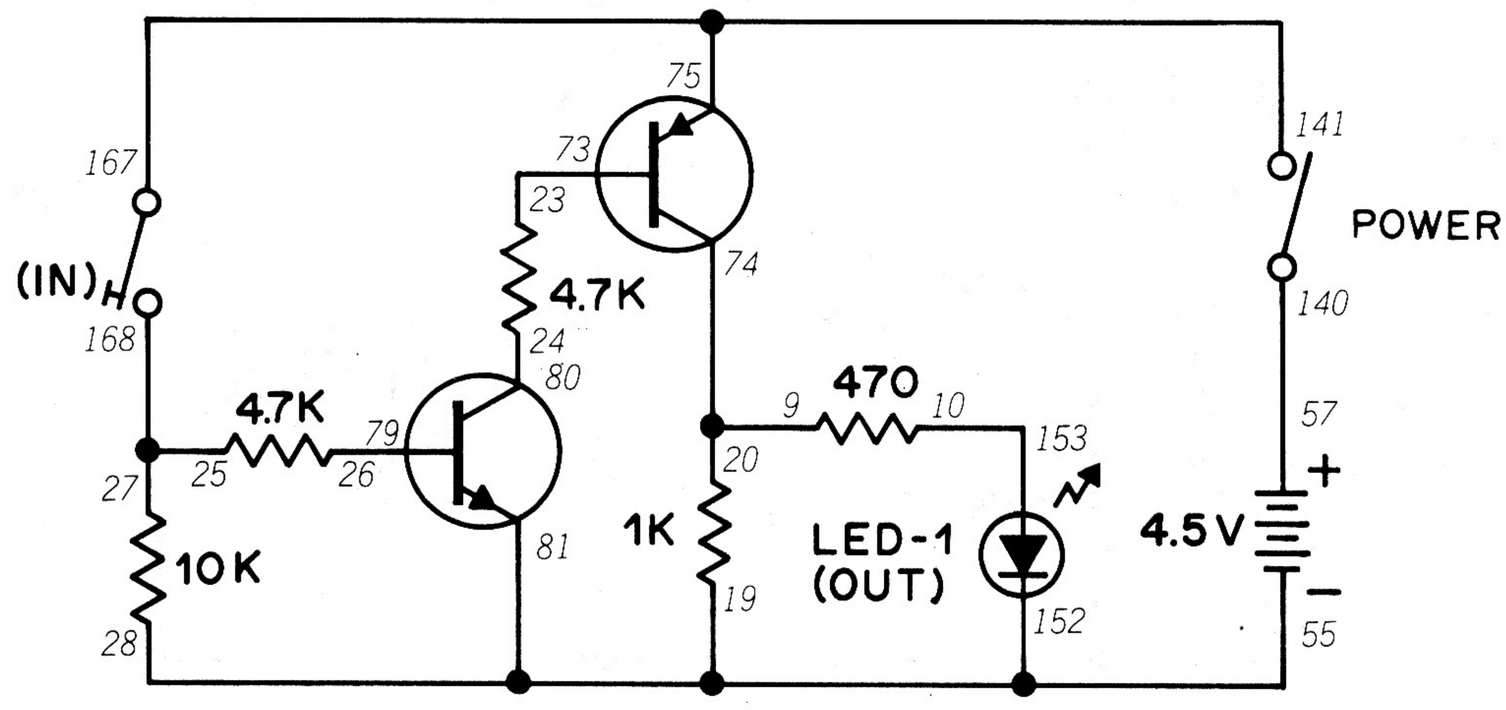

If you look carefully at the schematic for this Project, you'll notice that it looks like an amplifier circuit. It turns out that's what an RTL buffer is.

After building this circuit, set the Power Switch to ON. Now press the Key. You'll see LED 1 light. The input is 1; the output is also 1.

So why do we need circuits like an RTL buffer? Many times we want to control the operation of some device, such as a lamp, that requires more current than a digital circuit can deliver. A buffer circuit between the digital circuit and the external device lets us amplify the digital output enough to "drive" (that's engineering talk meaning "to operate" or "control") the external device.

Strictly speaking, this buffer circuit isn't a true digital circuit. But buffers are important in digital electronics to help digital circuits get along with the "outside world"

NOTES

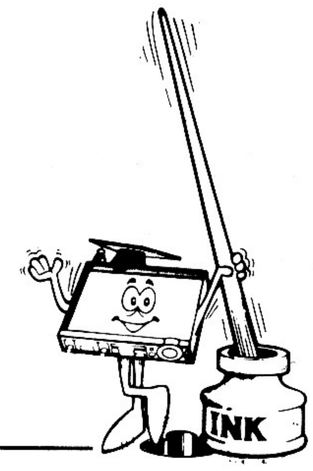

Wiring Sequence

9-20-74, 10-153, 23-73, 24-80, 26-79, 27-25-168, 28-81-19-152-55, 57-140, 141-75-167.

123. RTL OR GATE

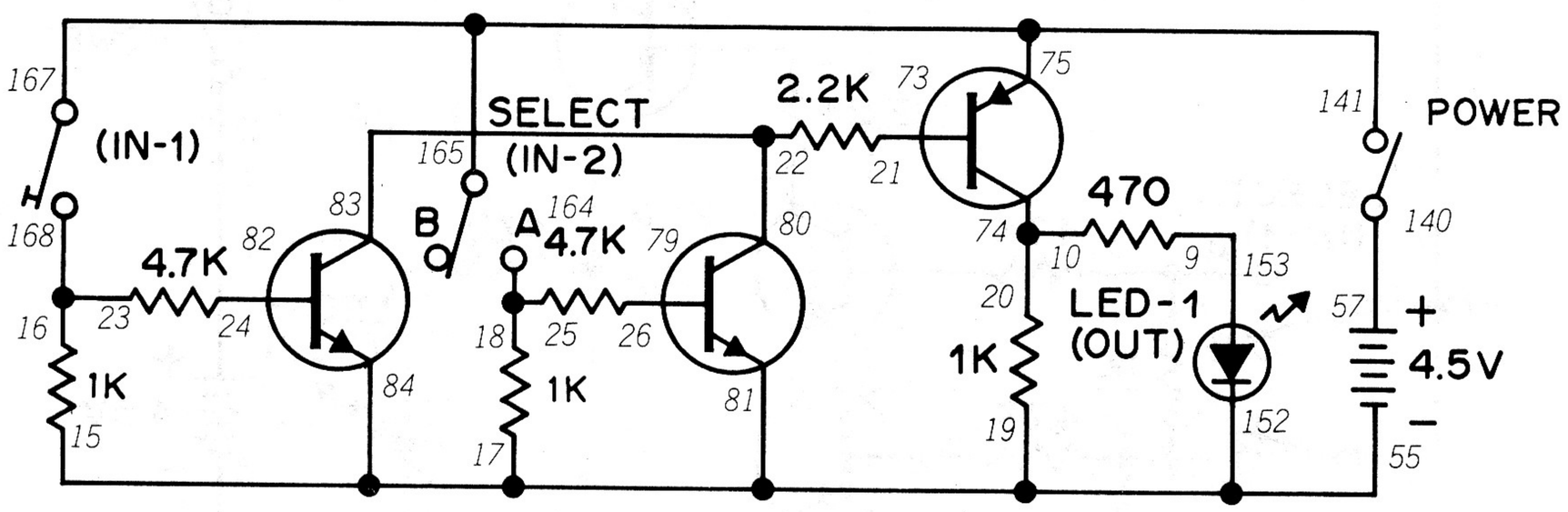

It's easy to make an OR gate using resistor-transistor logic. This circuit is an all-electronic version of Project 64.

As you build this circuit, set the Select Switch to B. When you finish the wiring, turn the Control Knob to ON. Press the Key and watch LED 1. What happens? Now release the Key and set the Select Switch to A. Does anything happen now? While the Select Switch is at A, press the Key again. Is there any change?

You saw that this circuit behaves just like the OR gates in Projects 64 and 119. You can see why it does so by looking at the schematic. When you press the Key or set the Select Switch to A, you let current flow to the base of one of the two 2SC Transistors. This lets the 2SC Transistor operate, and in turn this causes the 2SA Transistor to operate and light the LED. And the 2SA Transistor will operate if both 2SC Transistors are operating.

As you probably suspect, we seldom use actual switches (like the Key in this Project) with OR gates. Another circuit like a multivibrator can supply the input signal to turn on OR gate on or off *(or make it 0 or 1, or make it high or low ..... well, you know what we mean!).*

NOTES

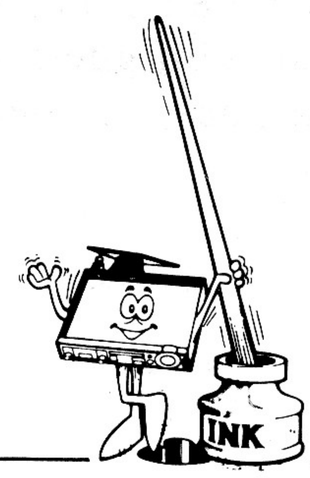

Wiring Sequence

9-153, 10-74-20, 15-84-17-81-19-152-55, 18-25-164, 21-73, 22-80-83, 23-16-168, 24-82, 26-79, 57-140, 141-75-165-167.

124. RTL AND GATE

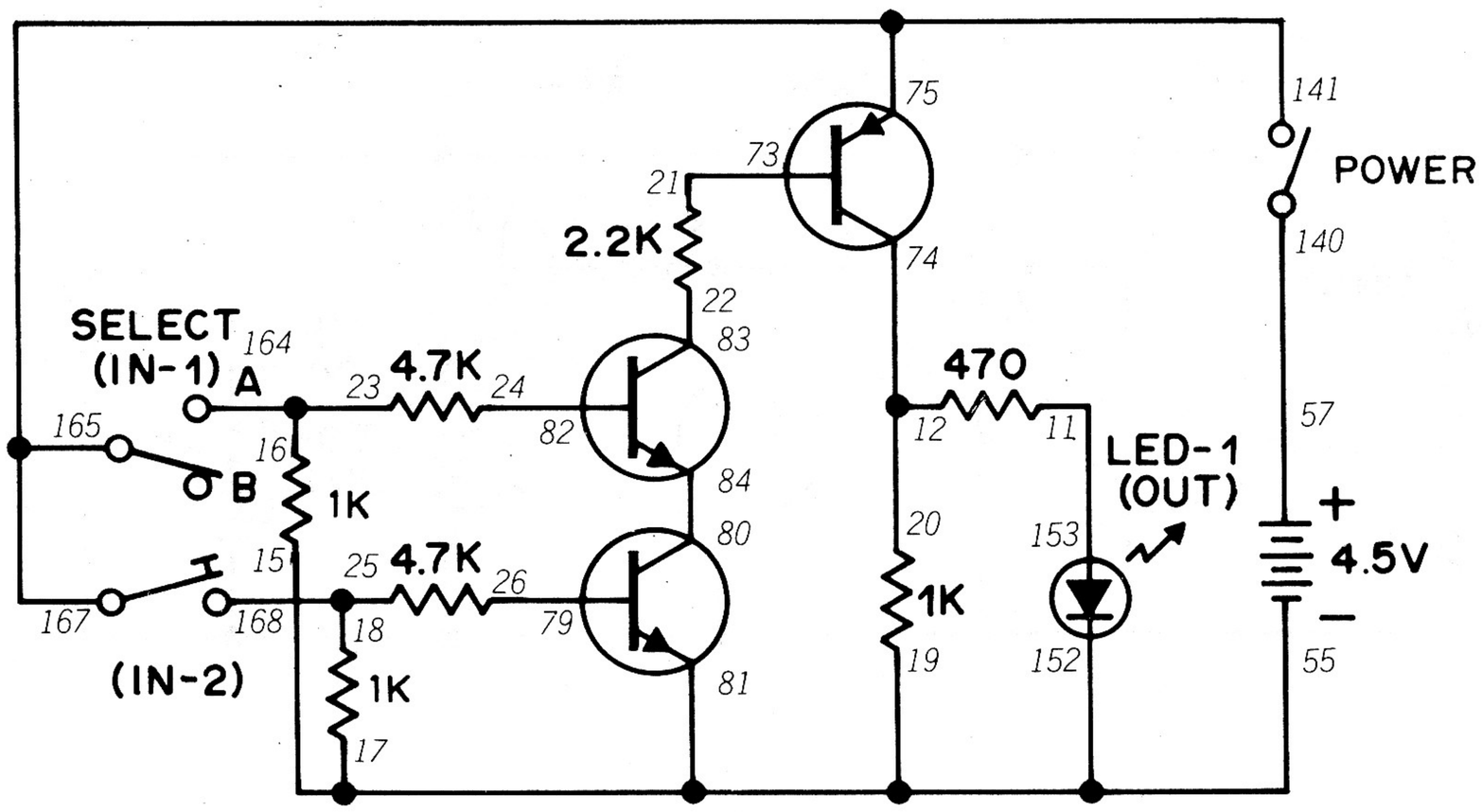

Since we just finished making an RTL OR gate, you might be wondering if there's any reason why couldn't make an AND gate using RTL. There isn't ..... and this Project proves it.

You can see how this circuit operates by looking at the schematic. You can see that both 2SC Transistors are connected in series, with the current from the collector of one going to the emitter of the other. Only when both Transistors are operating can the 2SA Transistor operate. The 2SA Transistor causes the LED to light.

RTL digital circuits were among the first to be developed, but they are not used very often today. One big problem is that slight changes in voltage can cause RTL circuits to operate improperly. Another problem is that only a small number of devices can be connected to an RTL circuit without affecting its operation. Other digital circuits have been developed to overcome these problems. One is called *DTL* and we're going to look at it next. Can you guess what DTL stands for? Make a mental guess ..... because we're soon going to find out.

NOTES

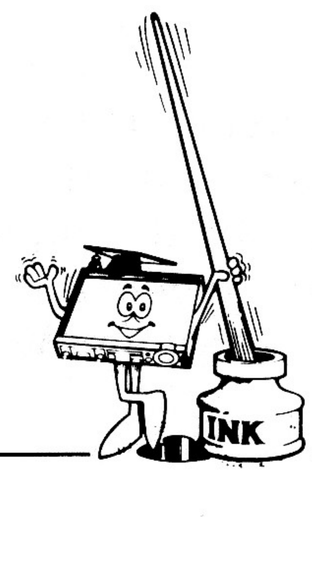

Wiring Sequence

11-153, 12-20-74, 15-17-81-19-152-55, 16-23-164, 18-25-168, 21-73, 22-83, 24-82, 26-79, 57-140, 80-84, 141-75-165-167.

125. DTL OR GATE

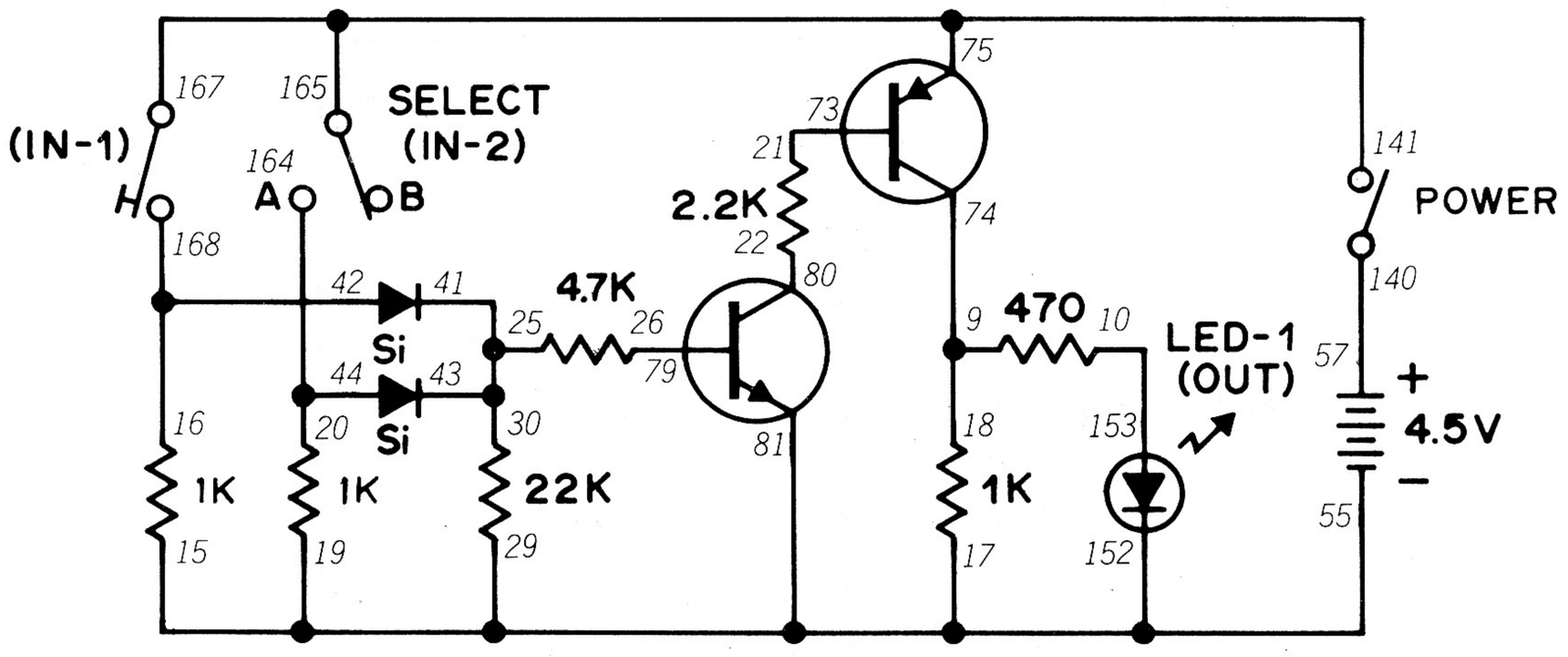

"DTL" stands for *diode-transistor logic,* which is a digital circuit using diodes and transistors. As you can see from the schematic for this Project, other components (such as resistors) are used but the circuit's operation depends upon the diodes and transistors.

Before you start building this Project, do you think there's any difference between how this DTL OR gate works and how the RTL OR gate in Project 123 worked? Make a mental note and then start making the wiring connections. Be sure to set the Select Switch to B during the wiring.

After wiring, turn the Control Knob to the right to switch power ON. Press the Key and see what happens to LED 1. Now release the Key and set the Select Switch to A. What happens now? Leave the Select Switch at A and press the Key. Is there any change?

You discovered this circuit behaves like the other OR gates you've built. You can see how this circuits works by looking at the schematic. Pressing the Key or setting the Select Switch to A allows current to flow to the base of the 2SC Transistor, which then enables the 2SA Transistor to operate.

Compare your circuit with the one below (we've printed it upside-down... don't peek until you've drawn your own circuit.)

It's also possible to make an OR gate out of just two diodes and a resistor. Can you figure out how? (If you need some clues, try looking back at Projects 40, 41 and 42 .....) Be sure to draw schematics for any circuits you come up with.

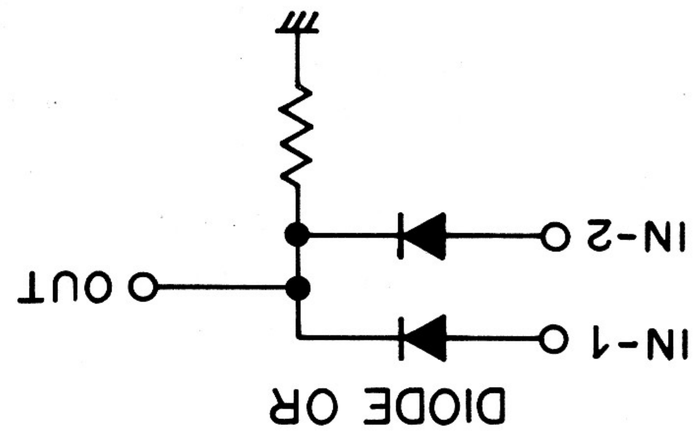

Wiring Sequence

10-153, 15-17-29-81-19-152-55, 18-9-74, 20-44-164, 21-73, 22-80, 25-41-43-30, 26-79, 42-16-168, 57-140, 141-75-165-167.

126. DTL AND GATE

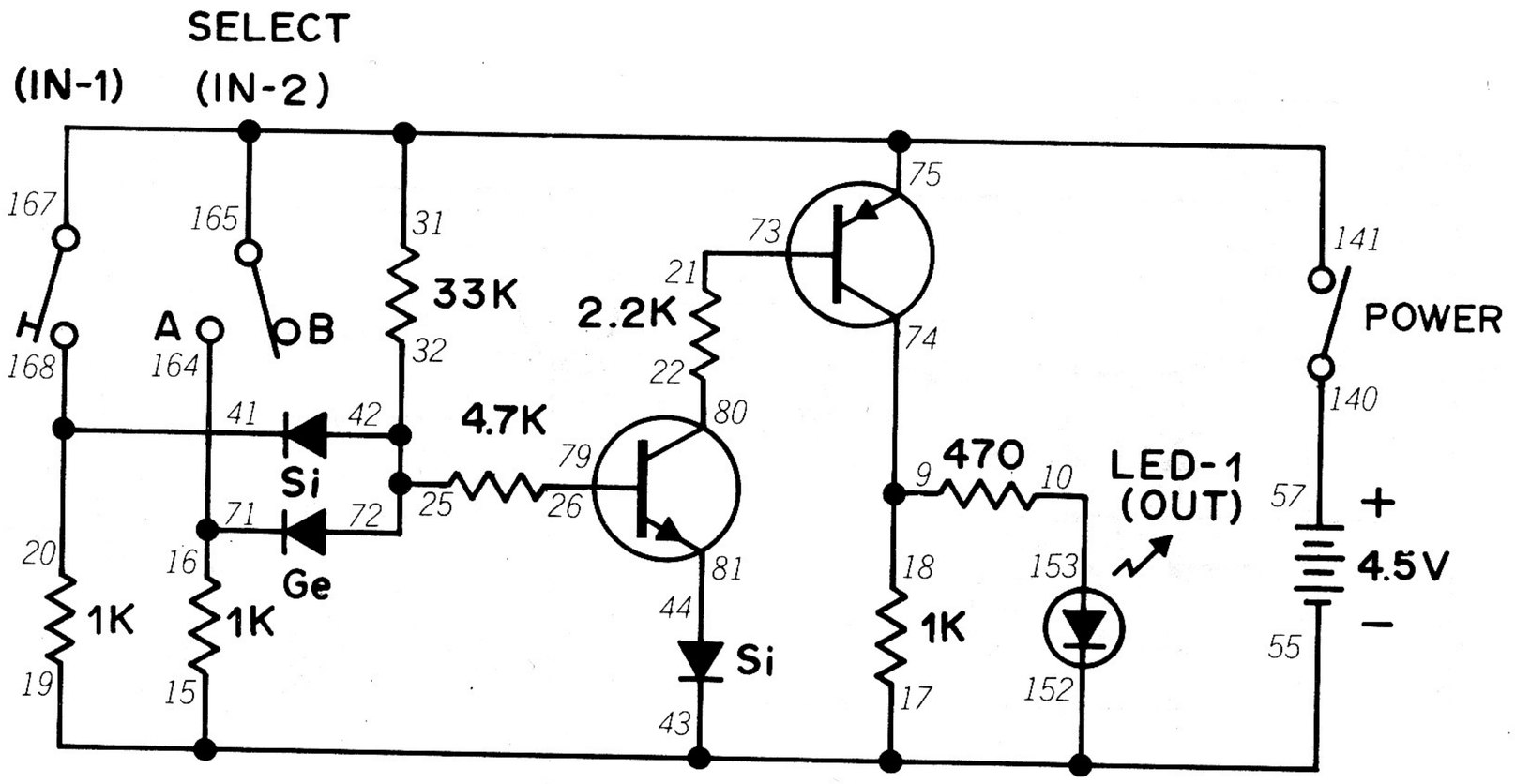

DTL can also be used in AND gates, as we'll see in this Project. You'll find it works just like other AND circuits we've played with in the past.

When you finish the wiring connections, turn the Control Knob to ON. You'll find that LED 1 will not light until both the Key is pressed and the Select Switch is set to A.

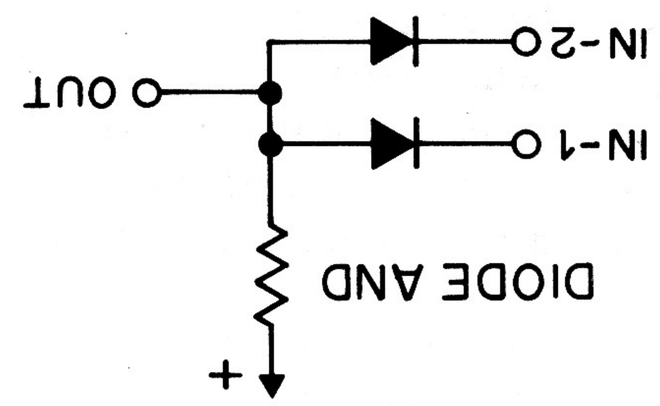

Can you tell how this Project works by looking at the schematic? At first glance it may seem like the circuit for this Project and our last one are virtually identical ..... can you spot the differences? *(Okay, here's a clue – which way is the arrow pointing?)*

It's also possible to make up an AND gate using just two diodes and a resistor. Can you figure out how? Be sure to make a note of what you come up with and compare it with our schematic.

Wiring Sequence

9-18-74, 10-153, 15-17-43-19-152-55, 16-71-164, 21-73, 22-80, 25-42-32-72, 26-79, 41-20-168, 44-81, 57-140, 141-75-31-165-167

127. DTL NOR GATE

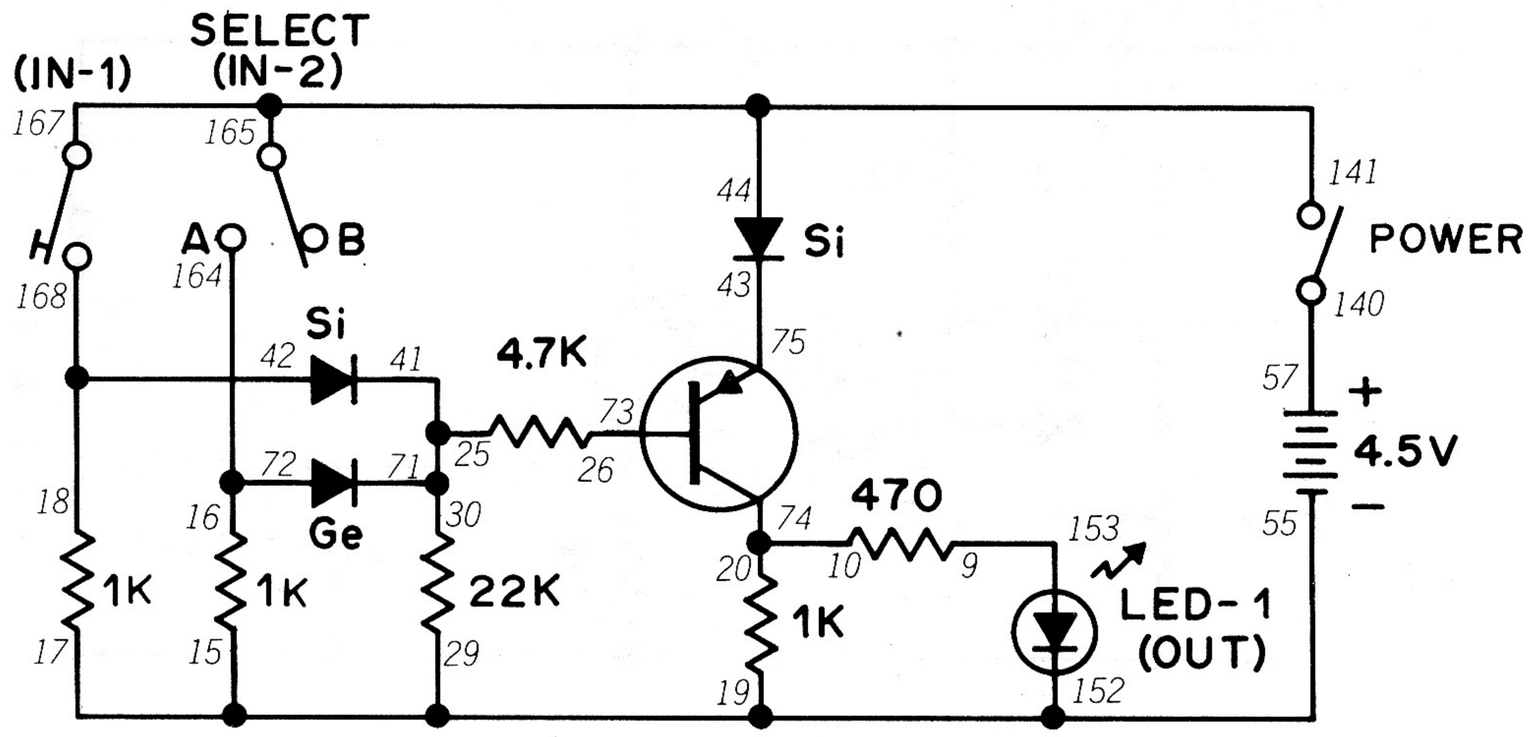

OR and AND aren't the only digital circuits we can whip up using DTL – and here's proof. If your memory's gotten rusty about how a NOR gate works, take a look back at Project 66 before building this circuit.

While building this Project, be sure to set the Select Switch to B. After finishing the wiring connections, turn the Control Knob to ON. Is anything happening to LED 1? Press the Key and see if there's any change in LED 1. Release the Key and set the Select Switch to A. What happens to LED 1? While the Select Switch is still set to A, press the Key and see if there's any change in LED 1.

You can see how this circuit works by referring to the schematic. When the Key is not pressed and the Select Switch is at B, current can flow to the base of the Transistor and LED 1 will light. But if the Key is pressed or if the Select Switch is at A, the base is connected to the positive side of the Batteries. When this happens, the Transistor can't operate (since there's no current flow to the base) and the LED goes out.

NOTES

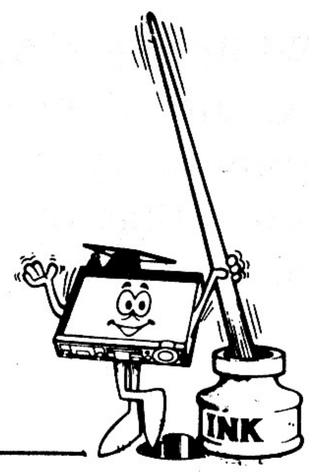

Wiring Sequence

9-153, 10-74-20, 15-17-29-19-152-55, 16-72-164, 18-42-168, 25-41-71-30, 26-73, 43-75, 57-140, 141-44-165-167.

128. DTL NAND GATE

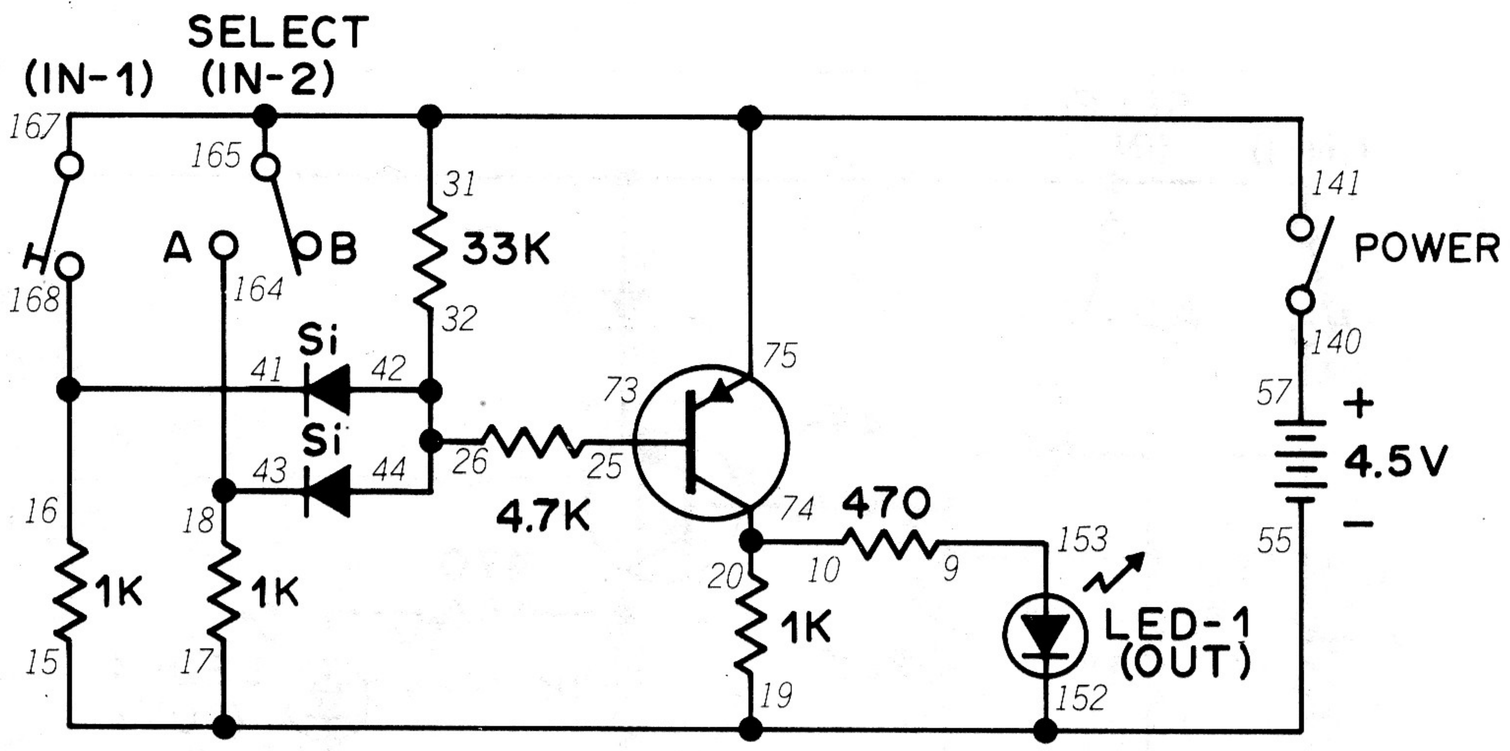

Do you remember how a NAND gate functions? If not, take a look back at Project 67. Here's our first "all-electronic" NAND gate circuit that will give you some clues about what goes on in that tiny Quad 2-input NAND IC.

As you build this Project, be sure to set the Select Switch to B. Turn the Control Knob clockwise to switch power ON. Is anything happening with LED 1? Try pressing the Key to see if there's any change. Release the Key and set the Select Switch to A. What does LED 1 do now? Leave the Select Switch at A and press the Key. Now what does LED 1 do?

From the schematic, you can see what happens when you press the Key and have the Select Switch set to A. The base of the 2SA Transistor has its current flow cut off and the Transistor can no longer operate. And this results in LED 1 going out.

While the NAND gates in the Quad 2-input NAND IC are all-electronic, they are not DTL. They're something called "TTL" – can you figure out what that means? Take a guess, because we'll find out for sure *very soon!*

NOTES

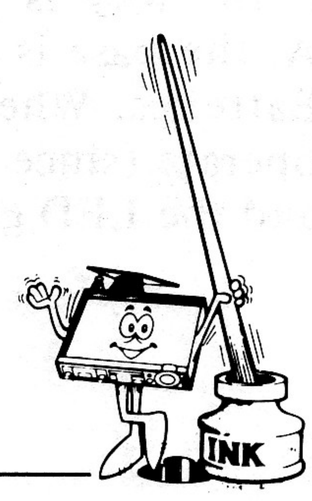

Wiring Sequence

9-153, 10-74-20, 15-17-19-152-55, 16-41-168, 18-43-164, 25-73, 26-42-44-32, 57-140, 141-75-31-165-167

129. DTL EXCLUSIVE OR GATE

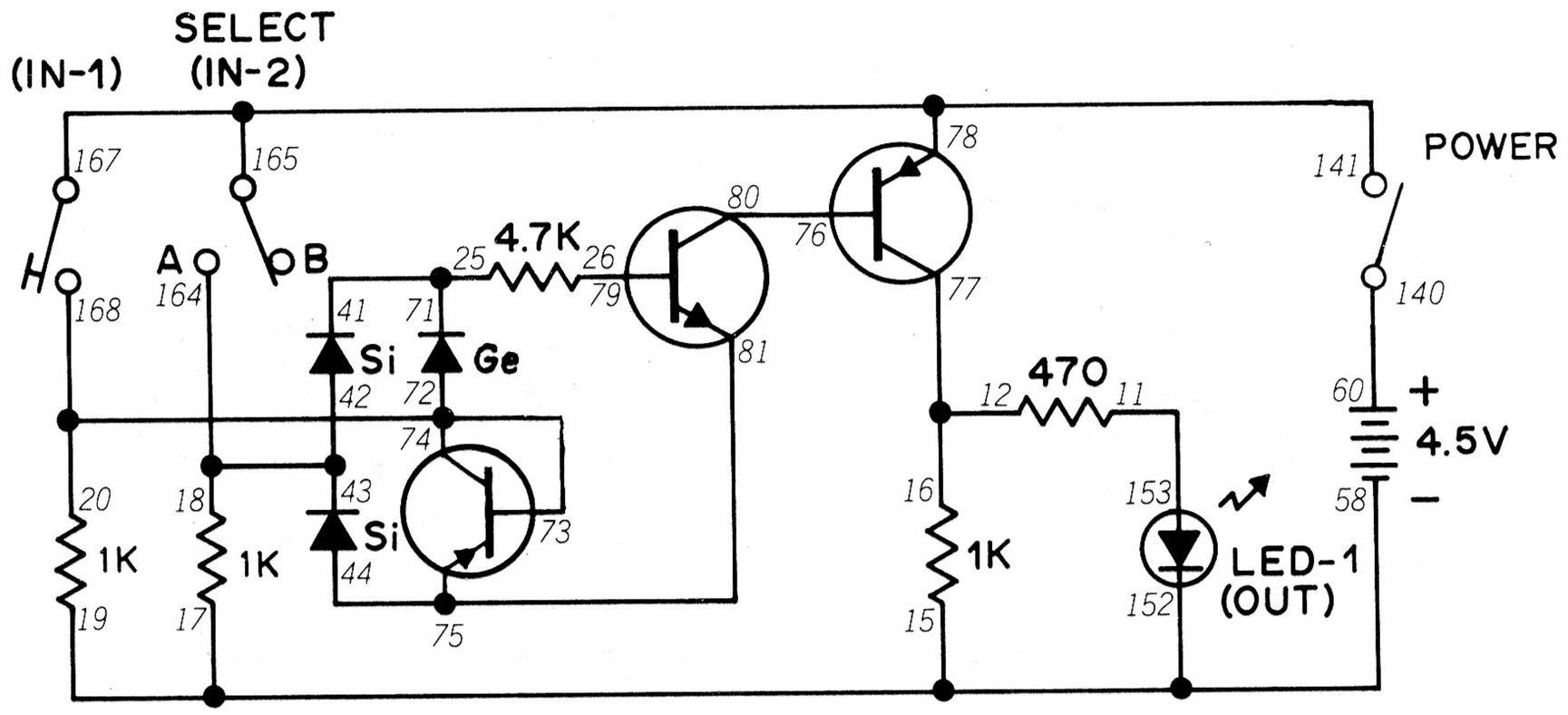

An *exclusive* OR gate??? Don't be surprised if you don't know what that means ..... because we haven't mentioned exclusive OR (abbreviated XOR) gates so far. But here's a Project that will let us find out about this fascinating circuit .....

As you build this circuit, be sure the Select Switch is set to B. When you finish the wiring connections, turn the Control Knob to the right to switch power ON. See what happens to LED 1. Now press the Key. Any change in LED 1? Release the Key and set the Select Switch to A. What does LED 1 do now? Leave the Select Switch at A and press the Key. Notice anything different now?

Surprised at anything? Sure you were ..... you didn't expect LED 1 to go out (or go to 0) when both inputs were 1, did you? (Unless, of course, you looked at the schematic for this Project *very* carefully before building it!)

So you can see that an XOR gate has an output of 0 if *both* inputs are the same. If the inputs are different (0 and 1 or 1 and 0), then the output is 1. You can see that this is a handy circuit to let us know if we have two inputs that are the same. (Or to let us know if we have two different inputs.)

There's also an *XNOR* gate (exclusive NOR). We won't build one here, but maybe you can figure out how, since it's the same thing as a NOR gate followed by an inverter! *(That ought to tell you how an XNOR gate should work.)* Be sure to keep track of what you do in your notebook if you decide to design an XNOR gate.

NOTES

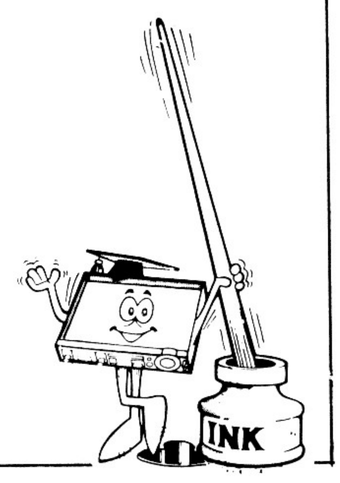

Wiring Sequence

11-153, 12-16-77, 15-17-19-152-58, 18-42-43-164, 20-72-73-74-168, 26-79, 41-25-71, 44-81-75, 60-140, 76-80, 78-141-165-167.

130. TTL INVERTER

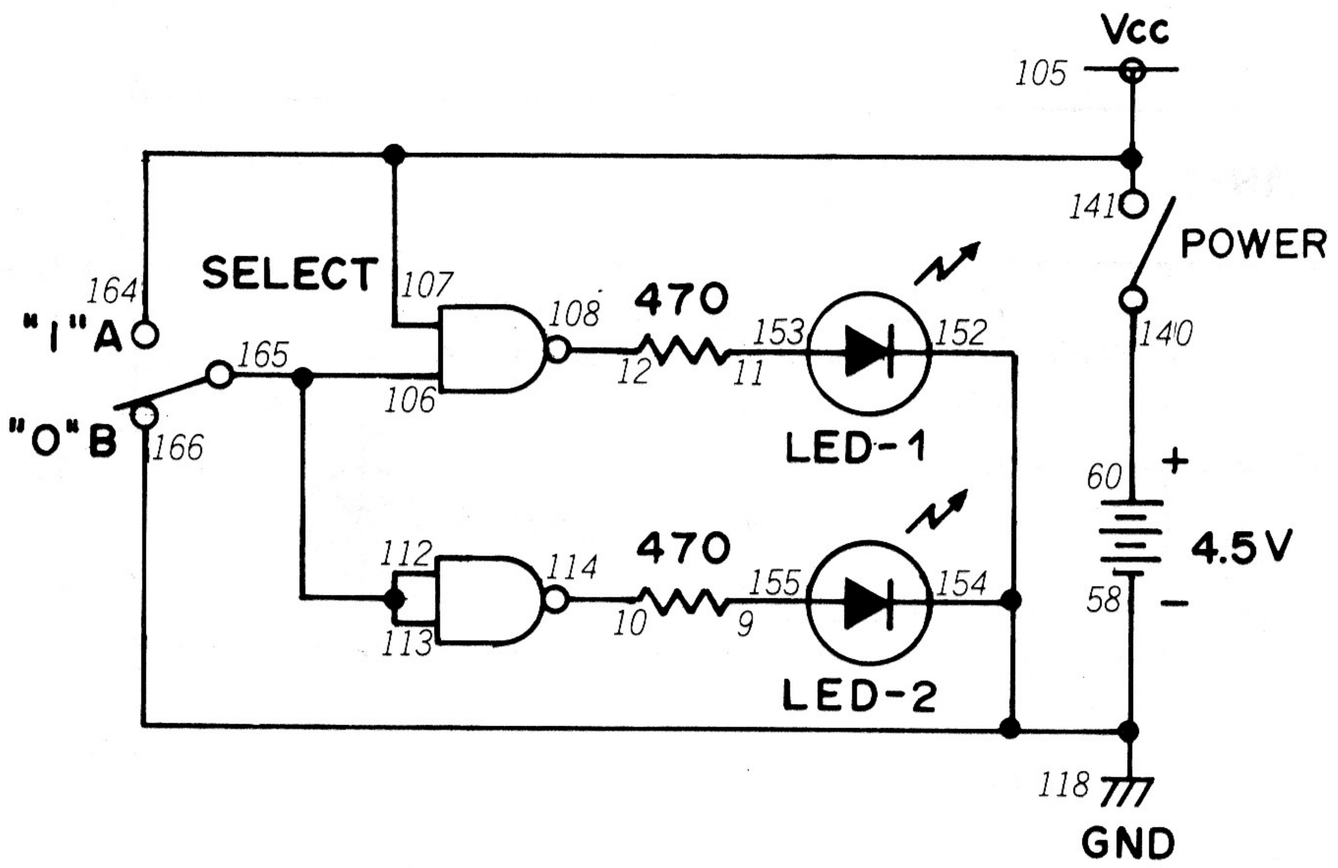

Back in Project 128 we asked you to guess what "TTL" meant. Did you say *transistor–transistor logic?* We hope so, because that's the correct answer.

TTL devices have largely replaced DTL because they are operate faster and are cheaper to operate. The Quad 2-input NAND IC in your Kit is a TTL device. It can be used to make up a wide variety of circuits – here we'll use it in an inverter.

You can see from the schematic that we use two of the four NAND gates in the IC.

As you build this Project, set the Select Switch to A. Turn the Control Knob to ON, and you'll notice that both LED 1 and LED 2 are off. Since the output is 0, the input must be ..... 1, of course! Now set the Select Switch to B and both LEDs come on, indicating you're inputting 0.

You can see why this happens by looking at the schematic. With the Select Switch at A, both inputs to the two NANDs are 1. That means the output of both go to 0 (and out go the LEDs). But when the Select Switch is set to B, we no longer have all inputs at 1 ..... and the LEDs come back on.

One of the amazing things to think about is to remember how large the RTL and DTL circuits were that we played with in earlier Projects. Believe it or not, *four* circuits like that have been shrunk down to fit inside that tiny IC! (There's a special type of IC, a bit bigger than the two in your Kit, which are actually computers shrunk to miniature size. They're called *microprocessors.*) The process which lets us put several circuits inside just one IC is called large-scale integration (LSI). You'll see this term often used to describe ICs.

NOTES

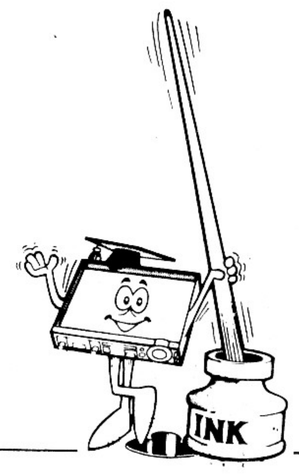

Wiring Sequence

9-155, 10-114, 11-153, 12-108, 58-118-166-154-152, 60-140, 105-107-164-141, 106-112-113-165.

131. TTL BUFFER

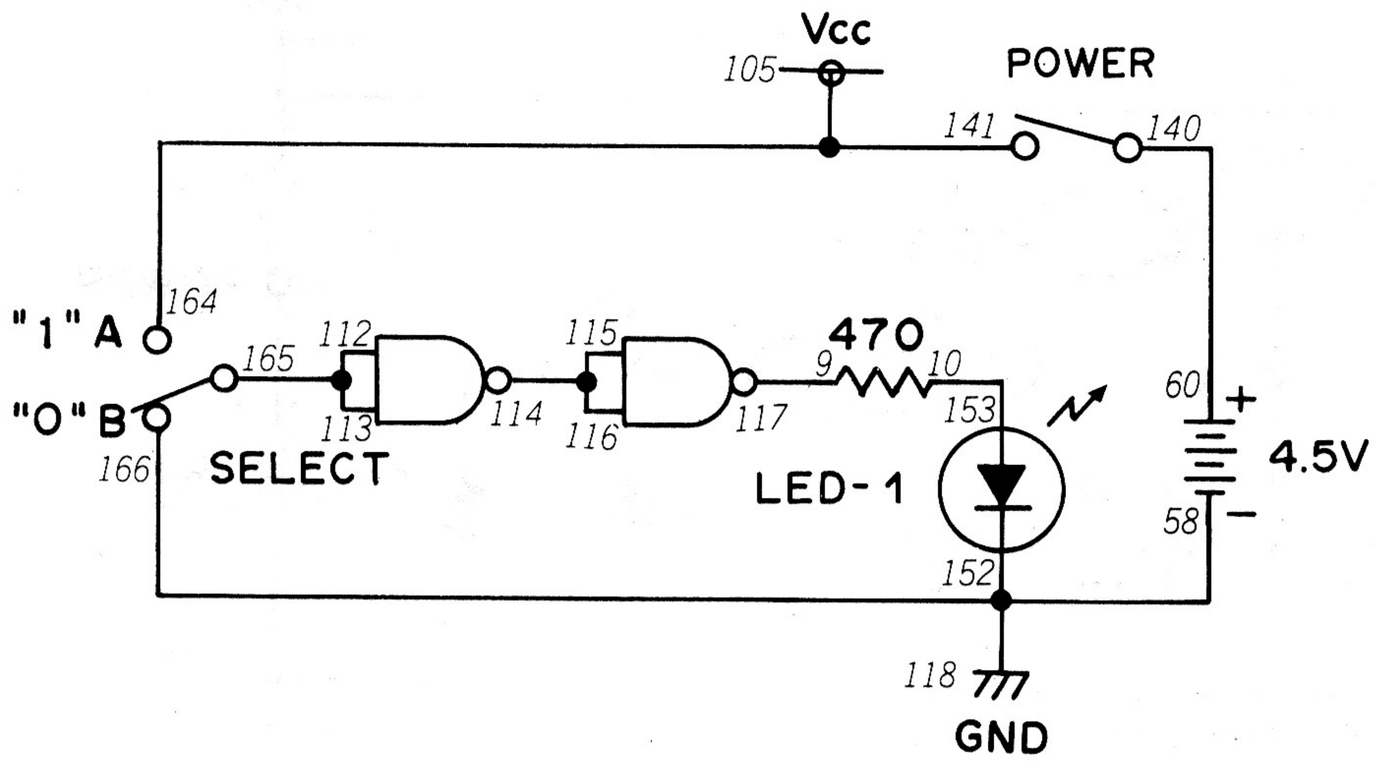

Ever wonder what happens when you start adding digital circuits together, using the output of one as the input of another? Build this Project and find out.

You can see from the schematic that we take the output from one NAND gate and use is as the input of another. You can see from the schematic that we "split" the output of the first NAND and use it for the inputs to the second (so that the two inputs for the second NAND will be the same). From what you know about NANDs, what do you think will happen if the input to the first NAND is 1? If the first input is 0? Try to figure it out before building this Project.

As you make the wiring connections, set the Select Switch to B. Turn the Control Knob clockwise to switch power ON. What does LED 1 do? Now set the Select Switch to A. LED 1 lights up.

As you've probably figured out, 1 is the input when the Select Switch is set to A, with an input of 0 coming when the Select Switch is at B. What happens is that if the input to the first NAND is 1, its output is 0. But the 0 output of the first NAND is the input of the second. The 0 input to the second causes its output to become 1, lighting the LED.

Sometimes we use buffer circuits to simply keep two portions of a device isolated from each other. This type of circuit does that job well.

NOTES

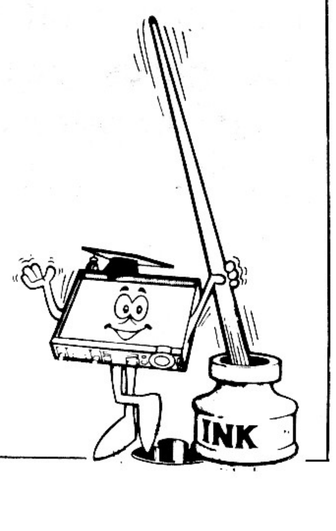

Wiring Sequence

9-117, 10-153, 58-118-166-152, 60-140, 105-164-141, 112-113-165, 114-115-116

132. TTL OR GATE

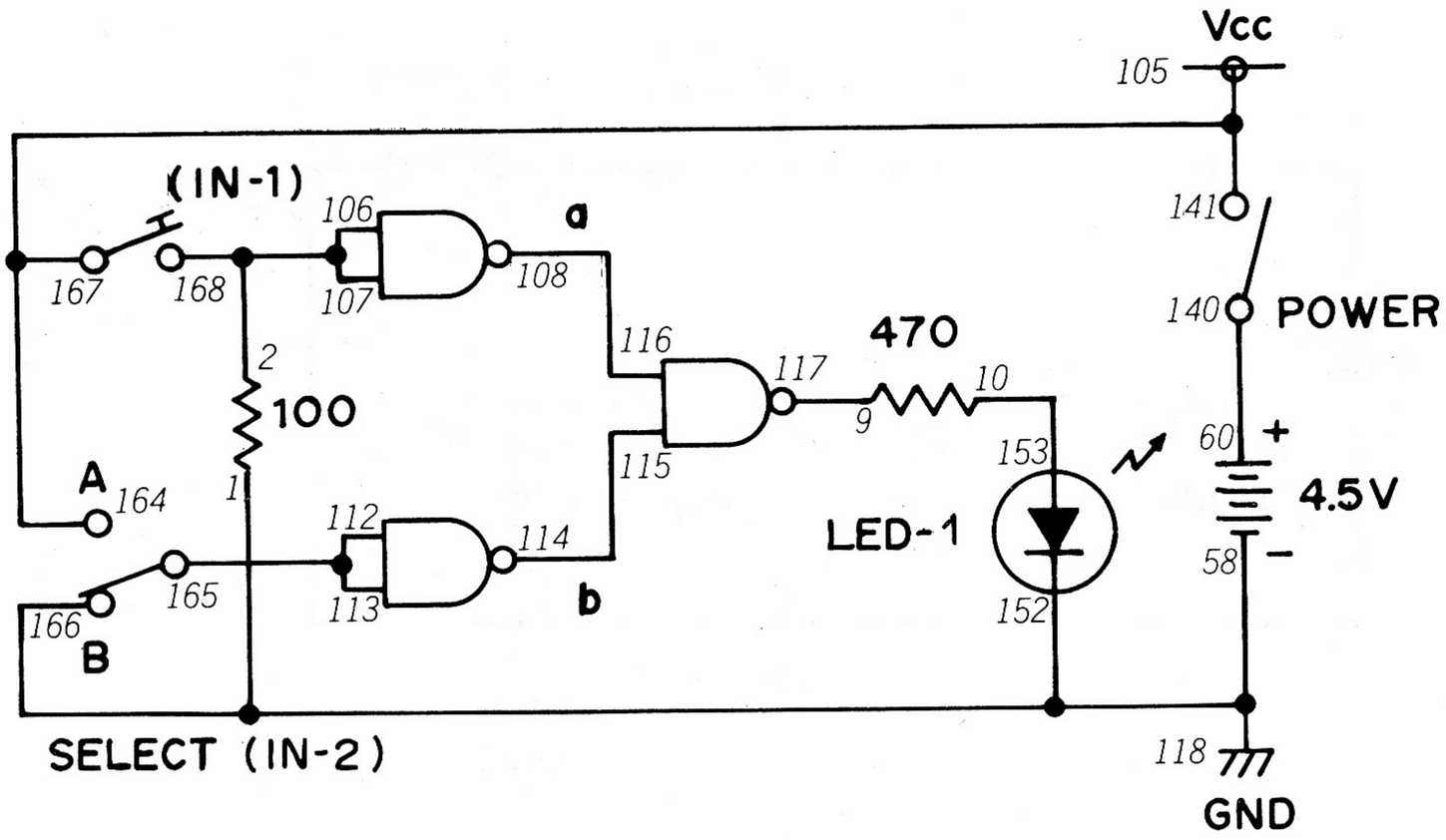

One of the nice things about the Quad 2-input NAND IC in your Kit is the way the four NAND gates can be combined to make up other logic circuits. It's possible to make up an OR gate from NANDs – as this Project will prove.

Our last two Projects have given some clues about how we can use NANDs to make up other logic circuits. Take a look at the schematic for this Project – can you trace what happens from each input to the eventual output? *(Sure you can –just give it a try.)*

As build this circuit, be sure to place the Select Switch at B. When you're finished, turn the Control Knob to ON. Now press the Key. What happens to LED 1 ? Release the Key and set the Select Switch to A. What happens to LED 1 now? Keep the Select Switch at A and press the Key again. Any change in LED 1 ?

You saw that this circuit indeed behaves like other OR gates you've played with. Have you traced what happens from input to output yet? The answer's in the next column – but no fair peeking.

Let's say you press the Key. This inputs 1 to both inputs of the NAND, causing the NAND's output to go to 0. This 0 output is one of the inputs to the NAND gate controlling the LED. Since a NAND's output is 0 only if all inputs are 1, the 0 input causes the NAND's output to go to 1 ... and LED 1 lights!

We can make up AND, NOR, XOR and NAND gates using the Quad 2-input IC. Can you figure out how we would connect the NANDs in the IC to do this? Take your best guess and make notes ... because we're soon going to find out.

NOTES

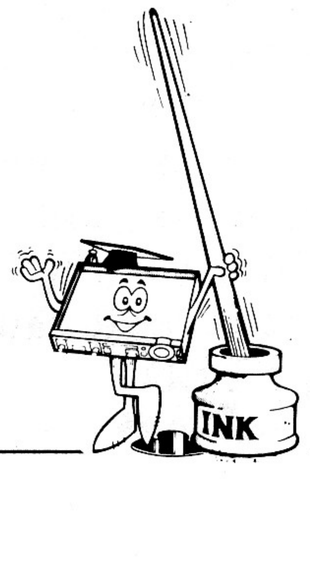

Wiring Sequence

1-152-166-118-58, 2-106-107-168, 9-117, 10-153, 60-140, 105-167-164-141, 108-116, 112-113-165, 114-115.

133. TTL AND GATE

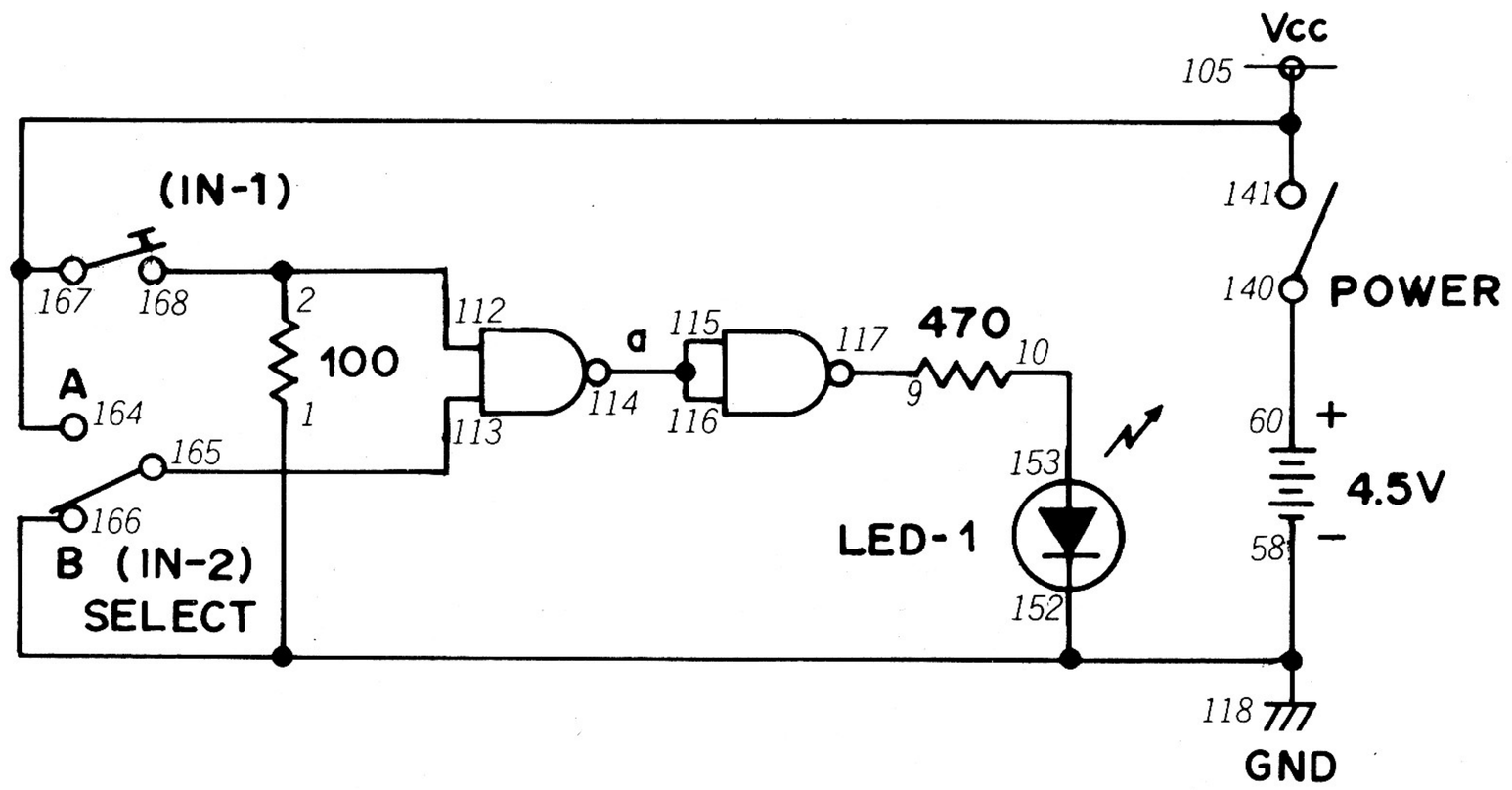

Did you figure out how to make an AND gate using the NAND gates? Hope so – and now we'll see how right you were.

Leave the Select Switch at B as you build this circuit. When you've finished, turn the Control Knob to the right to switch power ON. Press the Key. What does LED 1 do? Now set the Select Switch to A while pressing the Key. Is there any change in LED 1?

As you saw, pressing the Key and setting the Select Switch to A are 1 inputs, causing a 1 output from the AND gate. Can you follow the 1 input through the circuit until you reach a 1 output? Try it – and don't peek at the answer.

It works like this – each 1 input goes into the first NAND gate. This causes the output of the NAND to be 0. This 0 output is used for both inputs to the second NAND. The 0 inputs to the second NAND cause its output to be 1, and the LED lights.

NOTES

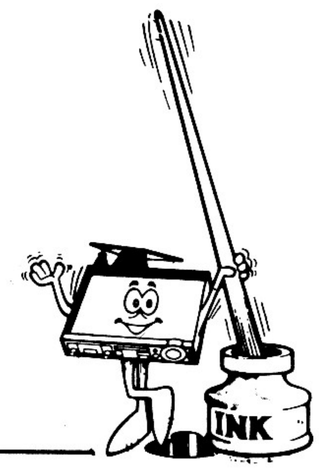

Wiring Sequence

1-152-166-118-58, 2-112-168, 9-117, 10-153, 60-140, 105-167-164-141, 113-165, 114-115-116.

134. TTL 3-INPUT AND GATE

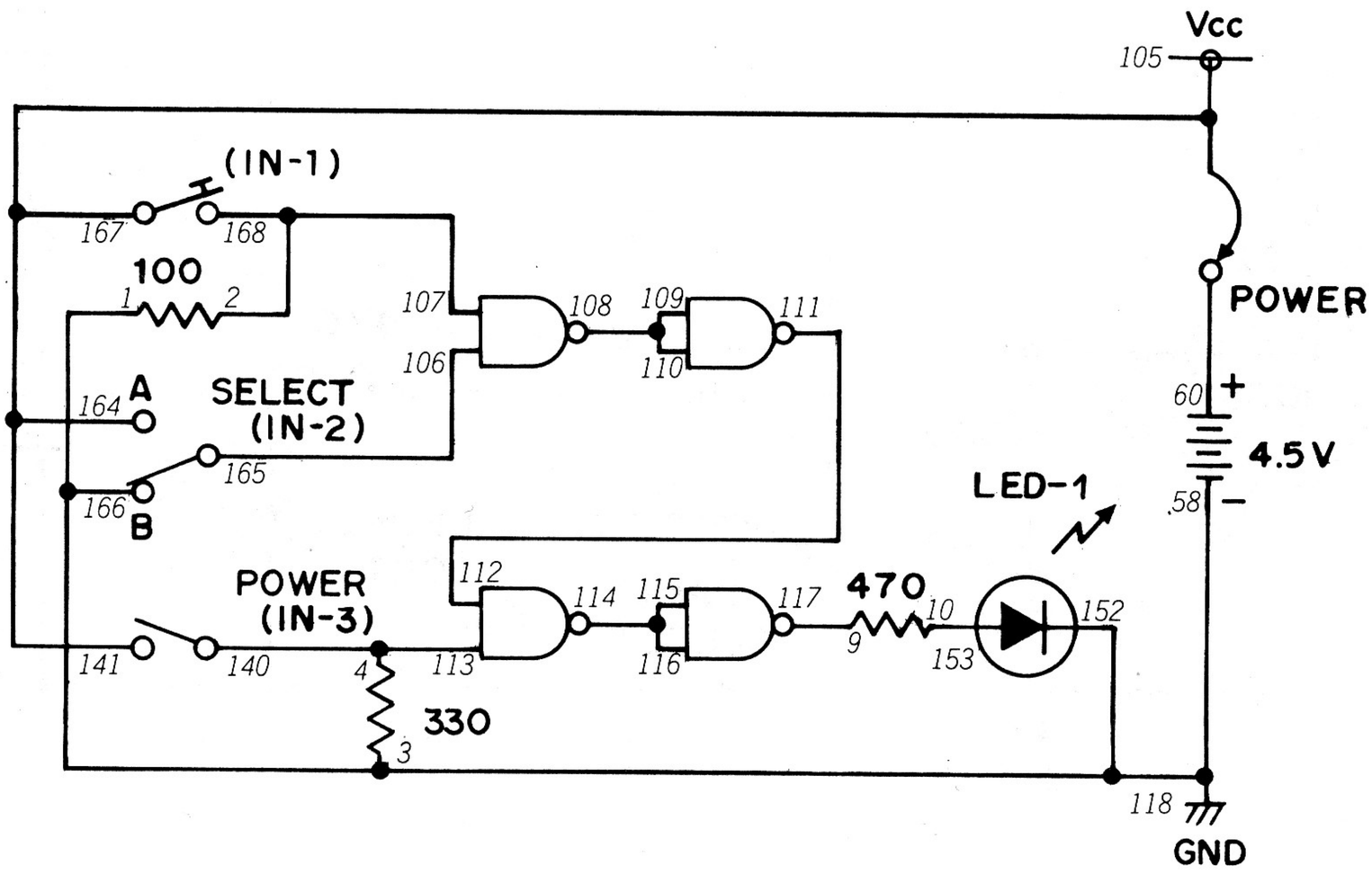

Even though we've been playing with digital circuits that have just two inputs, that doesn't mean we can't have more than two inputs. Here's a TTL AND gate that has three inputs. Try and figure out how 3 inputs produce a 1 output from the schematic.

You'll notice that we're doing things a bit differently this time – the Control Knob isn't used to turn this Project on or off. Instead, it's used to input a 0 or 1 signal. You "turn on" this Project by connecting terminals 60 and 105.

You know by now how AND gates work, so we won't go into detail here. But can you look at the schematic and figure out the setting for the two switches and Key so that you get a 1 output? Try it ..... and then see if you were right.

Here's how this circuit works: the Key and Select Switch are connected to one NAND. When they are both 1, the NAND outputs a 0. This 0 then makes up the input of another NAND, causing its output to become 1.

This 1 output then goes to another NAND gate (see it on the schematic?). There it makes up one input, along with the input from the Control Knob making up the other. When these are both 1, the NAND's output goes to 0. This output is used for both inputs of the second NAND, causing it to become 1 ..... and the LED lights.

Seems simple, doesn't it? Believe it or not, even complex computers operate by using the same basic principles we're using with the digital circuits in this Kit.

NOTES

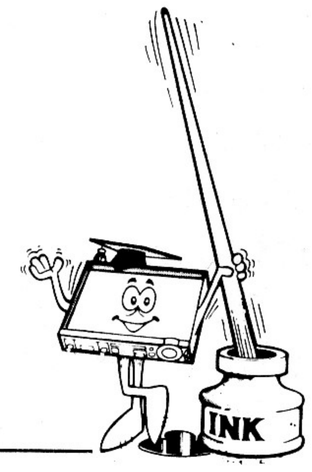

Wiring Sequence

1-3-152-166-118-58, 2-107-168, 4-140-113, 9-117, 10-153, 105-167-164-141, 106-165, 108-109-110, 111-112, 114-115-116, 60-105 (POWER)

135. TTL NOR GATE

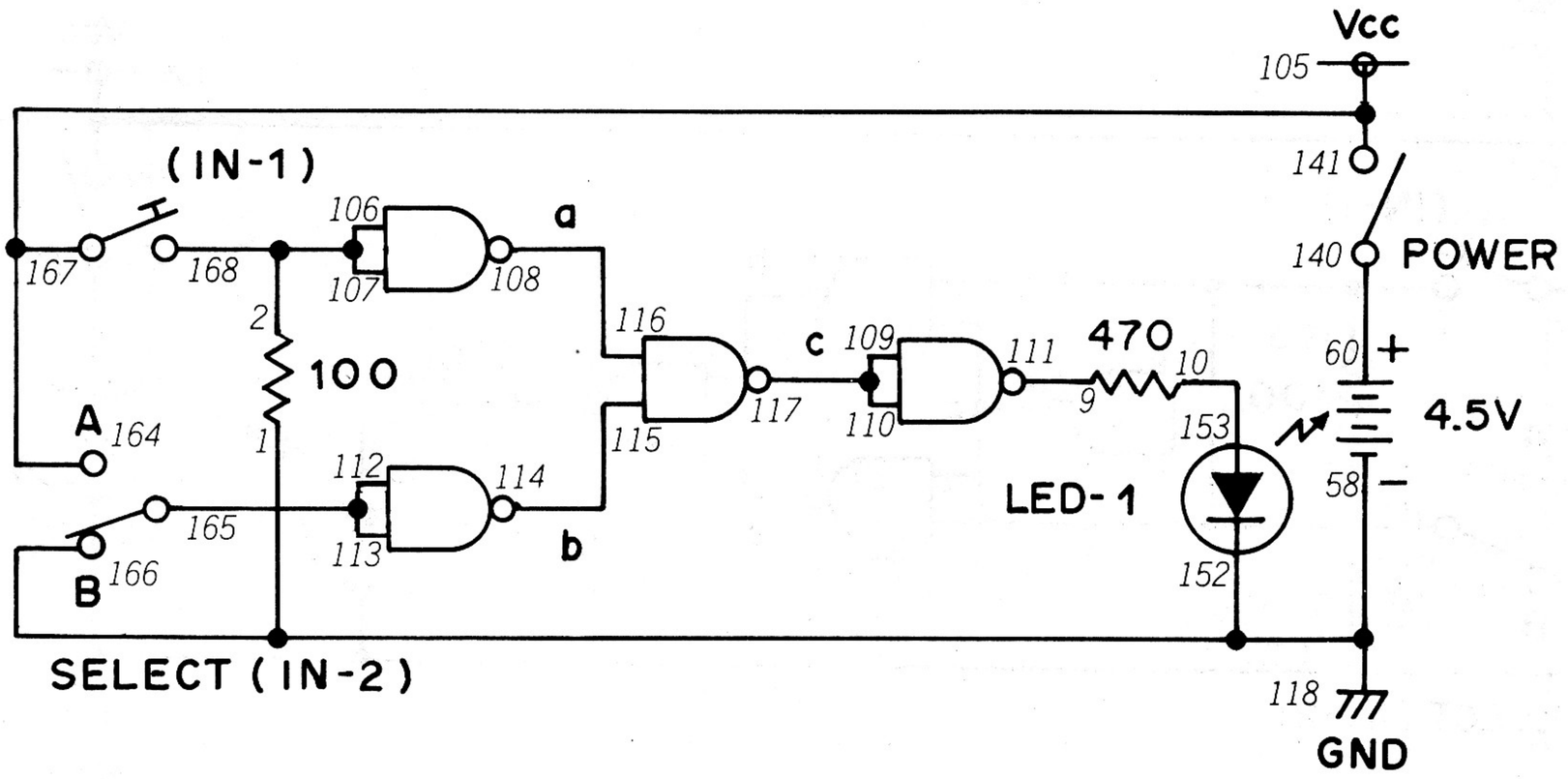

Try the same thing you've been doing with the past few Projects ..... trace the "logic flow" of this circuit! Start with a 0 or 1 input and see how this circuit arrives at a 0 or 1 output. Give it a good try ..... and don't peek at the answer.

As you're building this circuit, set the Select Switch to B. When you finish the wiring connections, turn the Control Knob to ON. Press the Key. Is there any change in LED 1? Release the Key and set the Select Switch to A. What happens to LED 1 now? Leave the Select Switch at A and press the Key ..... does anything different happen?

As you just saw, this Project behaves just like other NOR gates we've built. And it does so because .....

..... pressing the Key or setting the Select Switch to A inputs a signal of 1. This is **used for both inputs** *of the NANDs marked* ***a*** *or* ***b****.* ***a*** *and* ***b*** *have an output of 0 with an input of 1, and their outputs* **are** *used for the inputs to the NAND marked* ***c****.* **As** *long as one or both inputs are 0, the* ***c*** *NAND will have an output of 1. This 1 output is used for the inputs of the next NAND, causing an output of 0 ..... and out goes the LED.*

Don't believe us? Try putting a "0" or "1" on the schematic – see how it changes.

NOTES

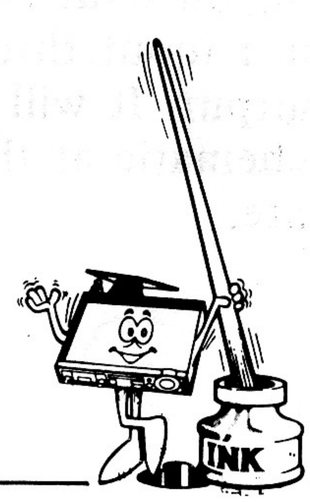

Wiring Sequence

1-152-166-118-58, 2-106-107-168, 9-111, 10-153, 60-140, 105-167-164-141, 108-116, 109-110-117, 112-113-165, 114-115.

136. TTL XOR GATE

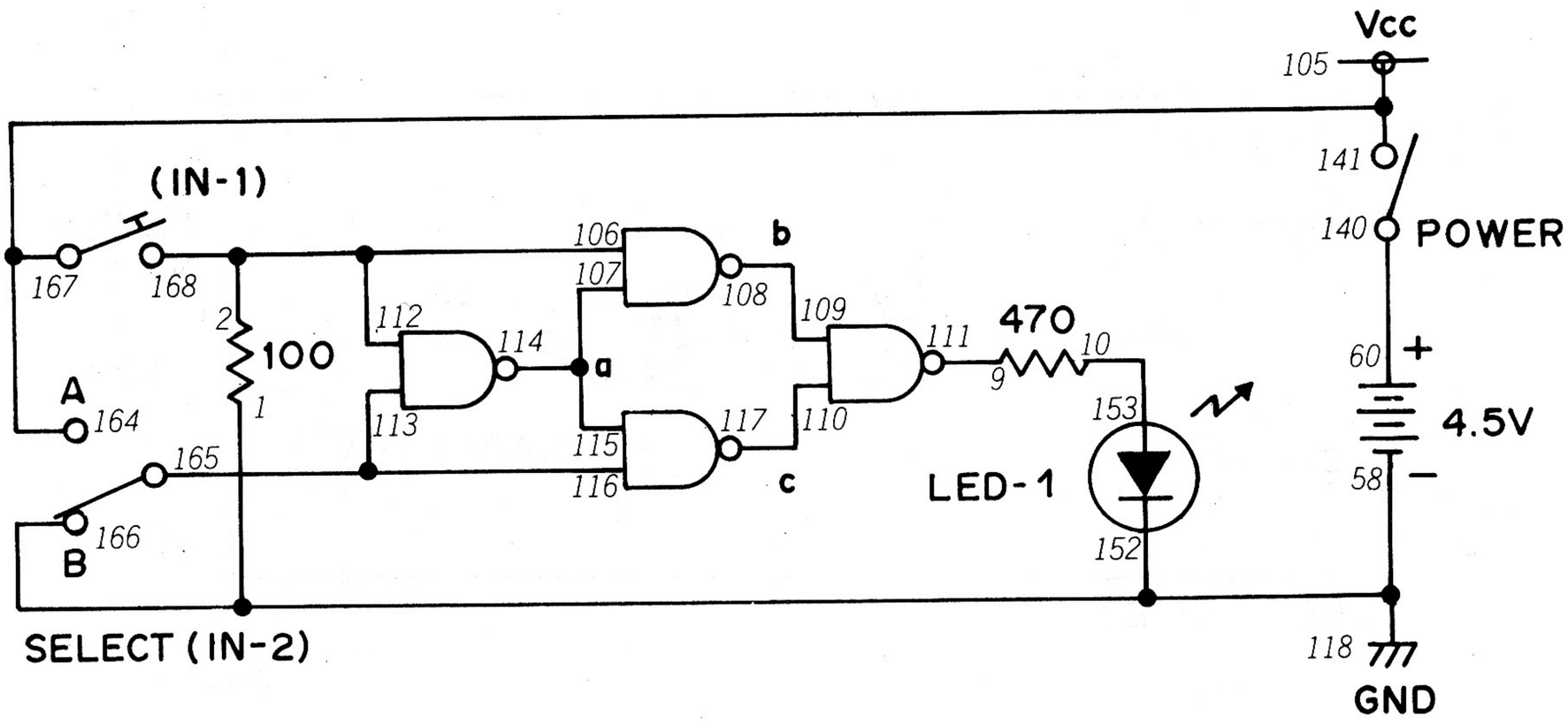

Back in Project 129 you saw how an exclusive OR (XOR) gate works. Since we've made up other digital circuits by combining NAND gates, you might suspect we could make XOR gates as well. We can, as this Project will show.

As you build this circuit, set the Select Switch to B. After you finish the wiring connections, turn the Control Knob to ON. Press the Key—does anything happen to LED 1? Now release the Key and set the Select Switch to A. What does LED 1 do now? Leave the Select Switch at A and press the Key. What happens to LED 1?

You can see this circuit behaves like the XOR gate you built back in Project 129. The output is 1 as long as the inputs are different. But if both inputs are the same – either 0 or 1 – the output of the XOR gate is 0.

Put on your thinking cap and try to follow each 0 or 1 input through the circuit until you reach the output. It will help if you mark "0" or "1" on the schematic at the input and output of each NAND gate.

NOTES

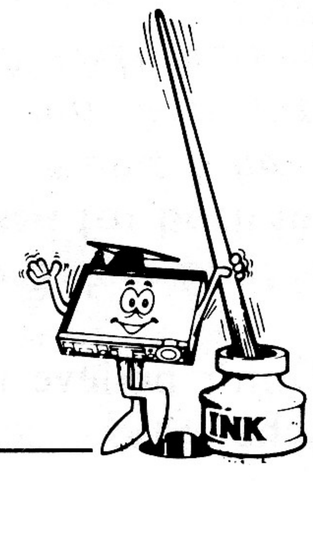

Wiring Sequence

1-152-166-118-58, 2-106-112-168, 9-111, 10-153, 60-140, 105-167-164-141, 107-114-115, 108-109, 110-117, 113-116-165.

137. TTL NAND ENABLE CIRCUIT

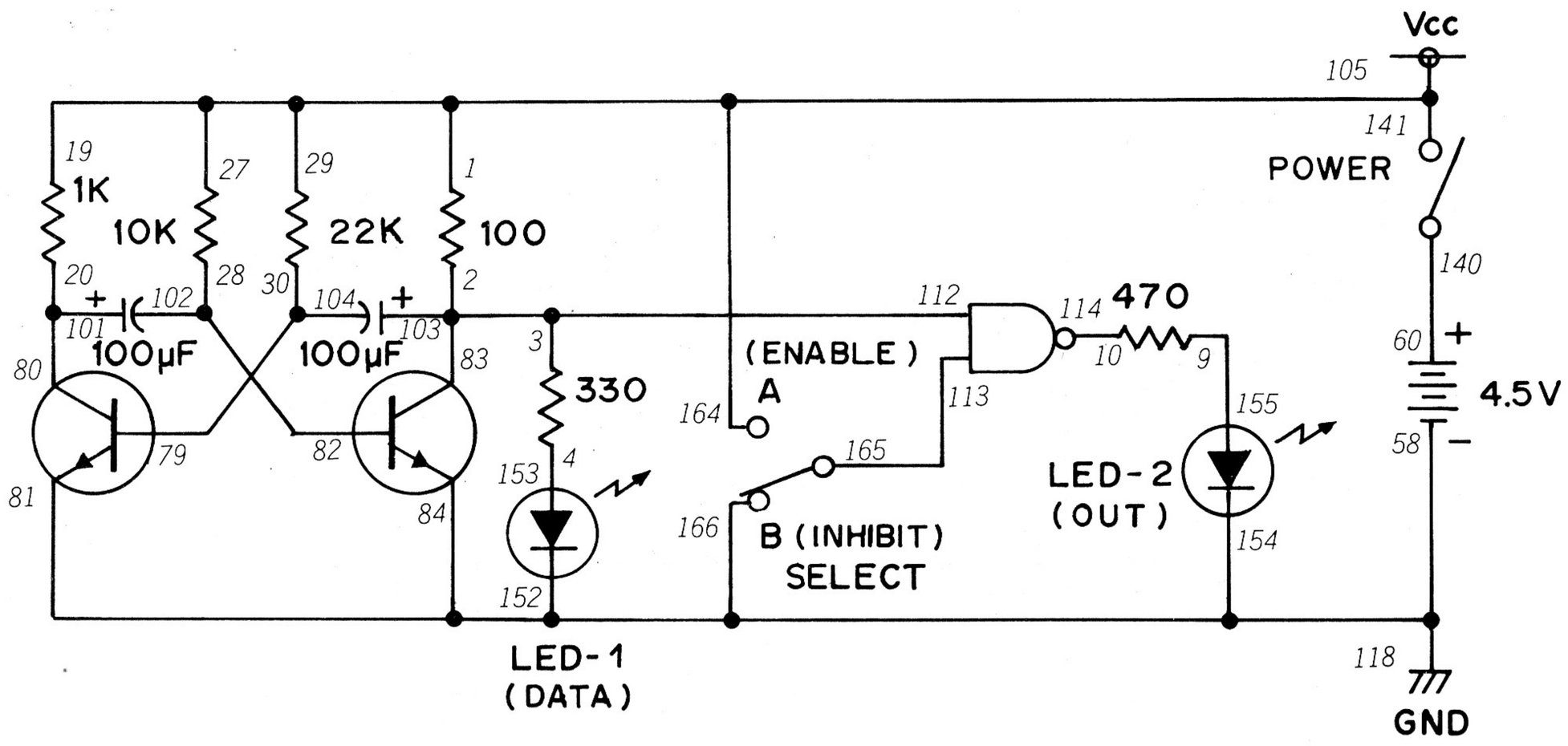

NAND gates can also be "electronic sentries." If you don't want a signal to pass, a NAND gate can make sure it doesn't.

We call this Project a "NAND enable circuit" because that's what the NAND gate does – it enables signals to pass through a channel. The two LEDs will let you see whether or not the signal shown at LED 1 will be allowed to pass to LED 2.

You probably recognized one circuit in the schematic right away – the multivibrator. You can see the output of the multivibrator by watching LED 1. You'll also notice that the multivibrator provides one of the inputs to the NAND gate. What do you suppose happens when the Select Switch is set to A? To B? Can you figure out what LEDs 1 and 2 will do with the Select Switch at A or B? Be sure to make some mental notes because we're about to find out.

As you build this circuit, set the Select Switch to B. When you finish the wiring, turn the Control Knob to ON and look at LEDs 1 and 2. You'll see LED 1 "blink" to indicate the output of the multivibrator. But look at LED 2. You'll see that it stays lit all the time, indicating that something's preventing the signal at LED 1 from reaching LED 2. Now set the Select Switch to A and observe LED 1. What is happening? Is the same thing happening to both LED 1 and LED 2?

You can see that LED 1 and LED 2 "take turns" going on and off. This is because we set one input of the NAND to 1 when we set the Select Switch to A. The multivibrator sends 0 and 1 signals to the other input. When the signal is 1, LED 1 lights but both input signals to the NAND are then 1. That means the NAND's output is 0, and LED 2 goes out. But if the multivibrator's output is 0, LED 1 goes out. Since this causes one of the inputs to the NAND is 0, its output goes to 1 and LED 2 lights.

(Now be honest – did you figure all that out before building the circuit?? We hope so.)

NOTES

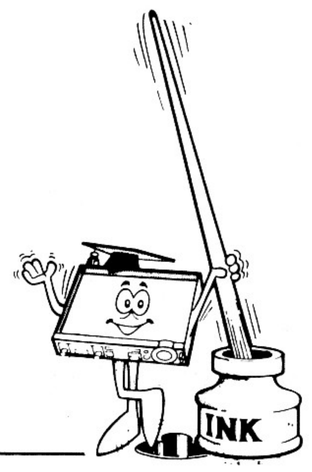

Wiring Sequence

1-19-27-29-141-164-105, 3-2-83-103-112, 4-153, 9-155, 10-114, 20-80-101, 28-82-102, 30-79-104, 60-140, 113-165, 118-58-84-81-166-154-152.

138. TTL AND ENABLE CIRCUIT

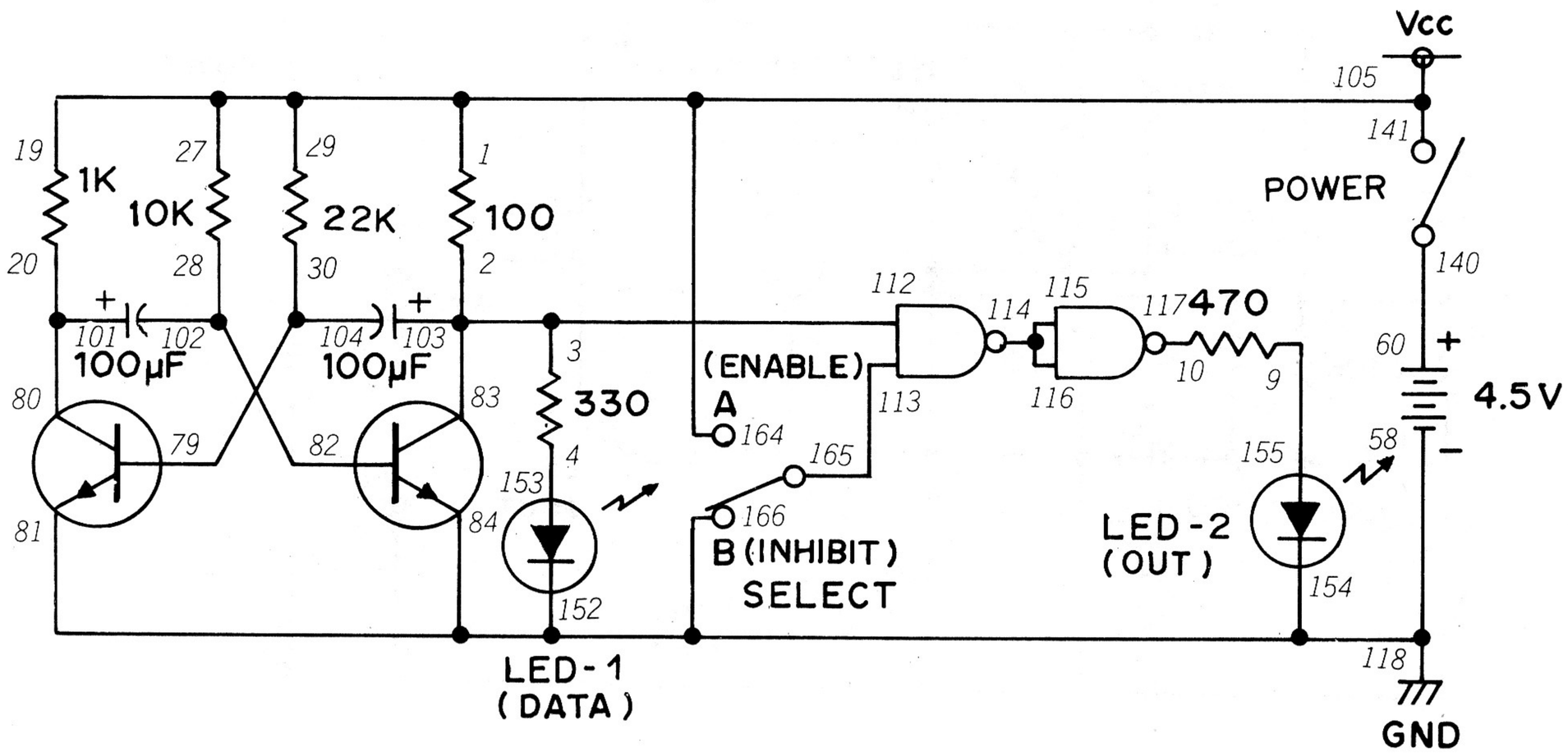

Our last Project had a characteristic that might be a problem in some situations. LEDs 1 and 2 take turns lighting on and going off. We might want both LEDs to light on and off together. Did you figure out how to do this when you played with the last Project? If not, this circuit will show you how.

If you look carefully at the schematic for this Project and the schematic for the last Project, you'll notice that they're almost identical. The only change is the addition of another NAND gate ..... can you guess what effect this has on the operation of the circuit?

Just like our last Project, setting the Select Switch to B will block the channel from LED 1 to LED 2. But when you set the Select Switch to A, you'll see LED 2 light and go off together with LED 1. The two NAND gates together make up an AND gate (remember from Project 133?).

In a circuit like this, LED 1 is often referred to as the *data input*. LED 2 is often called the *output*. These terms are often used with enable circuits and pop up from time to time when we talk about digital electronics. (Remember our definitions back in Project 63?).

You might suspect by now that we can use other digital circuits to perform an enable function. Can you figure out how? Be sure to keep notes of what you figure out ..... especially if you figure out how to use an OR gate in an enable circuit. *(There's a reason why, as you'll discover in the next Project.)*

NOTES

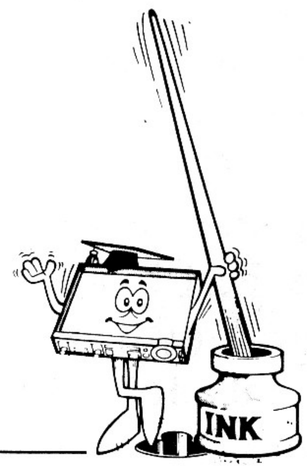

Wiring Sequence

1-19-27-29-141-164-105, 3-2-83-103-112, 4-153, 9-155, 10-117, 20-80-101, 28-82-102, 30-79-104, 60-140, 113-165, 114-115-116, 118-58-84-81-166-154-152.

139. TTL OR ENABLE CIRCUIT

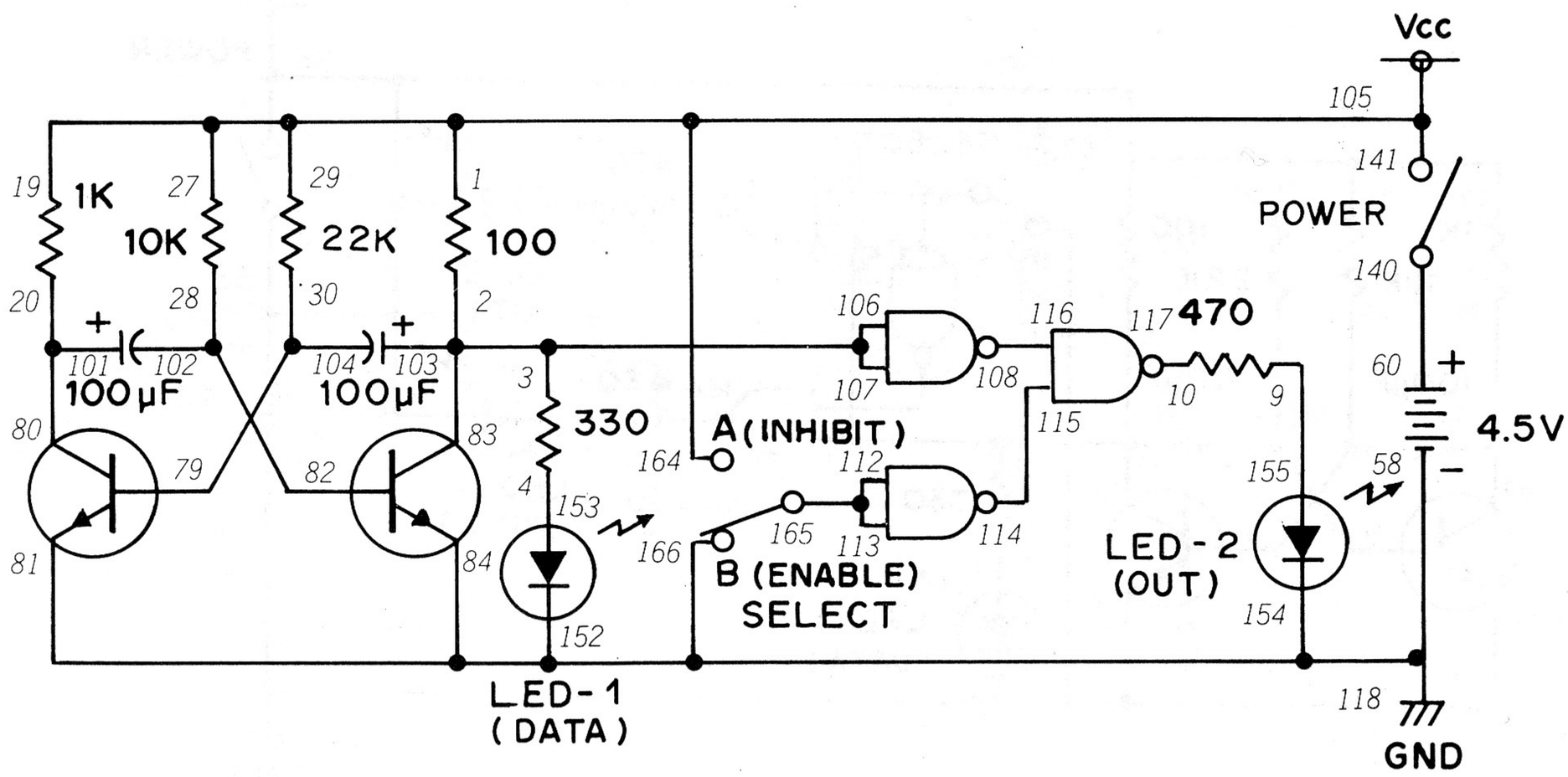

Did you ever figure out how to make up an enable circuit using an OR gate? If you did, here's a chance to check your ideas against an OR enable circuit we've cooked up.

Like our last two Projects, a multivibrator "feeds" input to the OR gate. You can see the output of the OR gate when you look at LED 1 – it'll flash on and off according to the output of the multivibrator. Can you tell what will happen once the multivibrator's input is applied to the OR gate by looking at the schematic? Give it a shot before building the Project.

As you build this circuit, try setting the Select Switch to A instead of B like we did for the last two Projects. After you finish the wiring connections, turn the Control Knob to ON. What does LED 1 do? And what is LED 2 doing? Now set the Select Switch to B. What happens to LED 1 and LED 2 now?

You say that in this circuit setting the Select Switch to A blocks the flow of data from LED 1 to LED 2 (this is called the *inhibit status*). But when the Select Switch is at B, data can flow from LED 1 to LED 2. This is called the *enable status.*

This circuit works like it does because a NAND gate can give an output of 1 only if both inputs are 0. When you set the Select Switch to A, the inputs to one NAND are at 1. The output is 0, and this supplies one of the inputs of the NAND gate controlling LED 2. This 0 input never changes as long as the Select Switch is left at A. But when the Select Switch is set to B, both inputs become 0 and the output becomes 1. This means one of the inputs to the NAND controlling LED 1 becomes 1 all the time, and LED 2 can now blink on and off depending on whether the other input is 0 or 1.

(Now there was nothing difficult about that, was there?)

NOTES

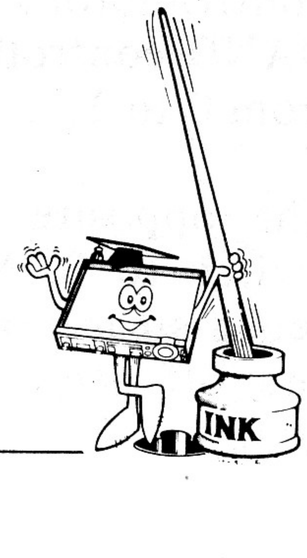

Wiring Sequence

1-19-27-29-141-164-105, 3-2-83-103-106-107, 4-153, 9-155, 10-117, 20-80-101, 28-82-102, 30-79-104, 60-140, 108-116, 113-112-165, 114-115, 118-58-84-81-166-154-152.

140. TTL LINE SELECTOR

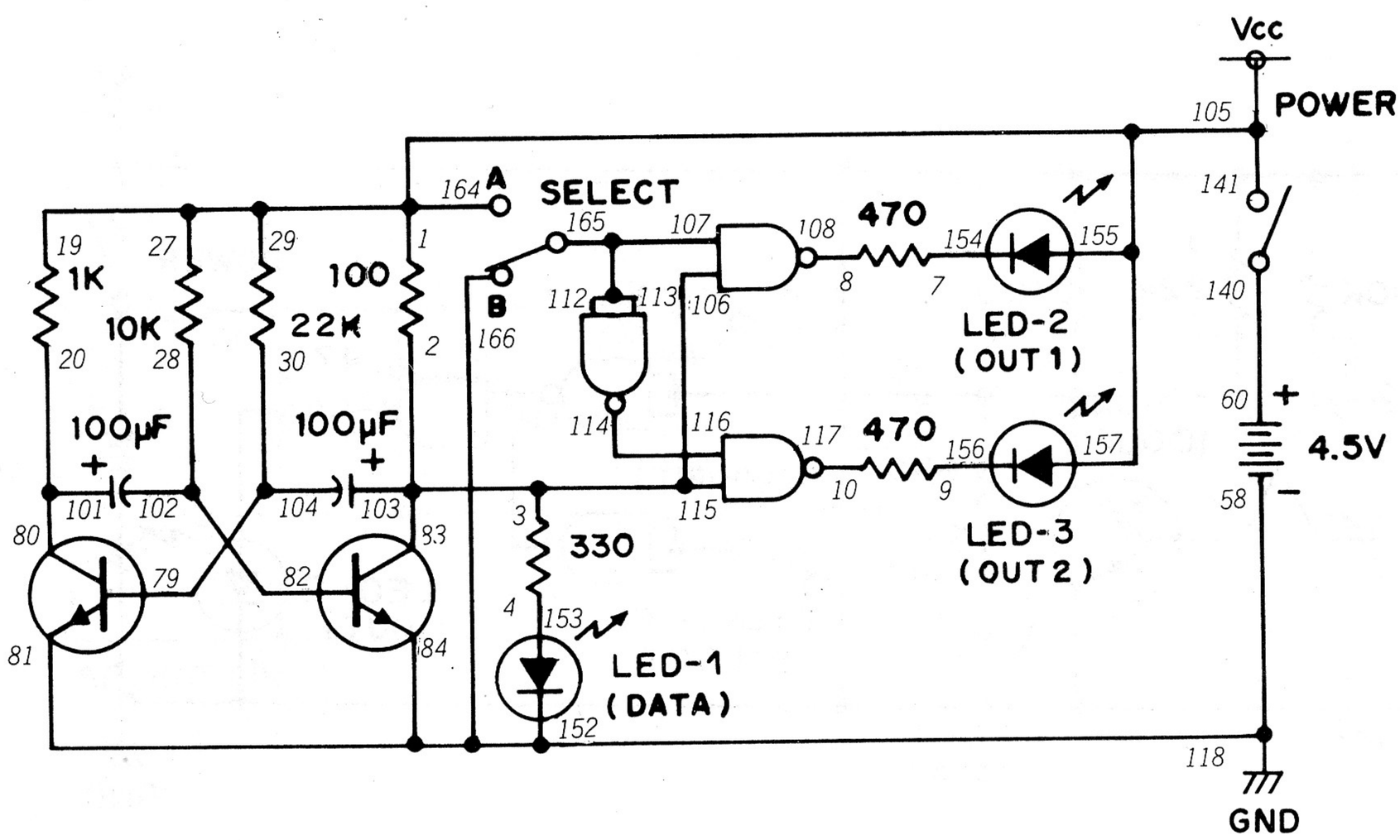

It isn't too hard to think of situations where we might want to send input data to two or more different outputs. This Project shows how we can use a network of NAND gates to help us do just that.

You can see that we use a multivibrator and three NAND gates in this circuit. You can leave the Select Switch at either A or B when building this Project. When you turn the Control Knob to ON, you'll see that LED 1 is blinking. But what are LED 2 and LED 3 doing? If the Select Switch is at A, LED 2 is blinking. But if the Select Switch is at B, LED 3 will blink.

As you can see on the schematic, setting the Select Switch to A or B controls the inputs to the two NANDs that light LED 2 or LED 3. With the Select Switch at A, the NAND controlling LED 2 gets one steady input of 1. The output of the multivibrator supplies the other input. As the multivibrator's output switches from 0 to 1, the NAND controlling LED 2 also switches its output from 0 to 1.

The opposite happens when you set the Select Switch to B. Now the NAND controlling LED 3 gets a steady input of 1 so that LED 3 can go on and off according to the input from the multivibrator.

Now put on your thinking cap and try to follow the inputs from A and B of the Select Switch to LED 2 and LED 3. Notice the NAND gate serving as an input for the NAND controlling LED 3 ..... what happens to it when you set the Select Switch from A to B?

NOTES

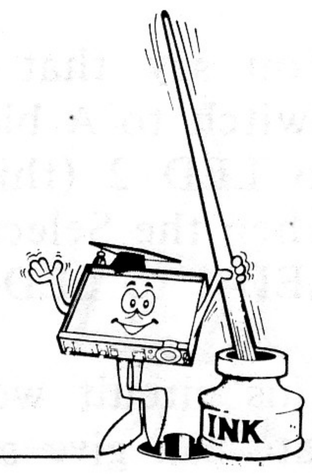

Wiring Sequence

1-19-27-29-141-155-157-164-105, 3-2-83-103-115-106, 4-153, 7-154, 8-108, 9-156, 10-117, 20-80-101, 28-82-102, 30-79-104, 60-140, 107-113-112-165, 114-116, 118-58-84-81-166-152.

141. TTL DATA SELECTOR

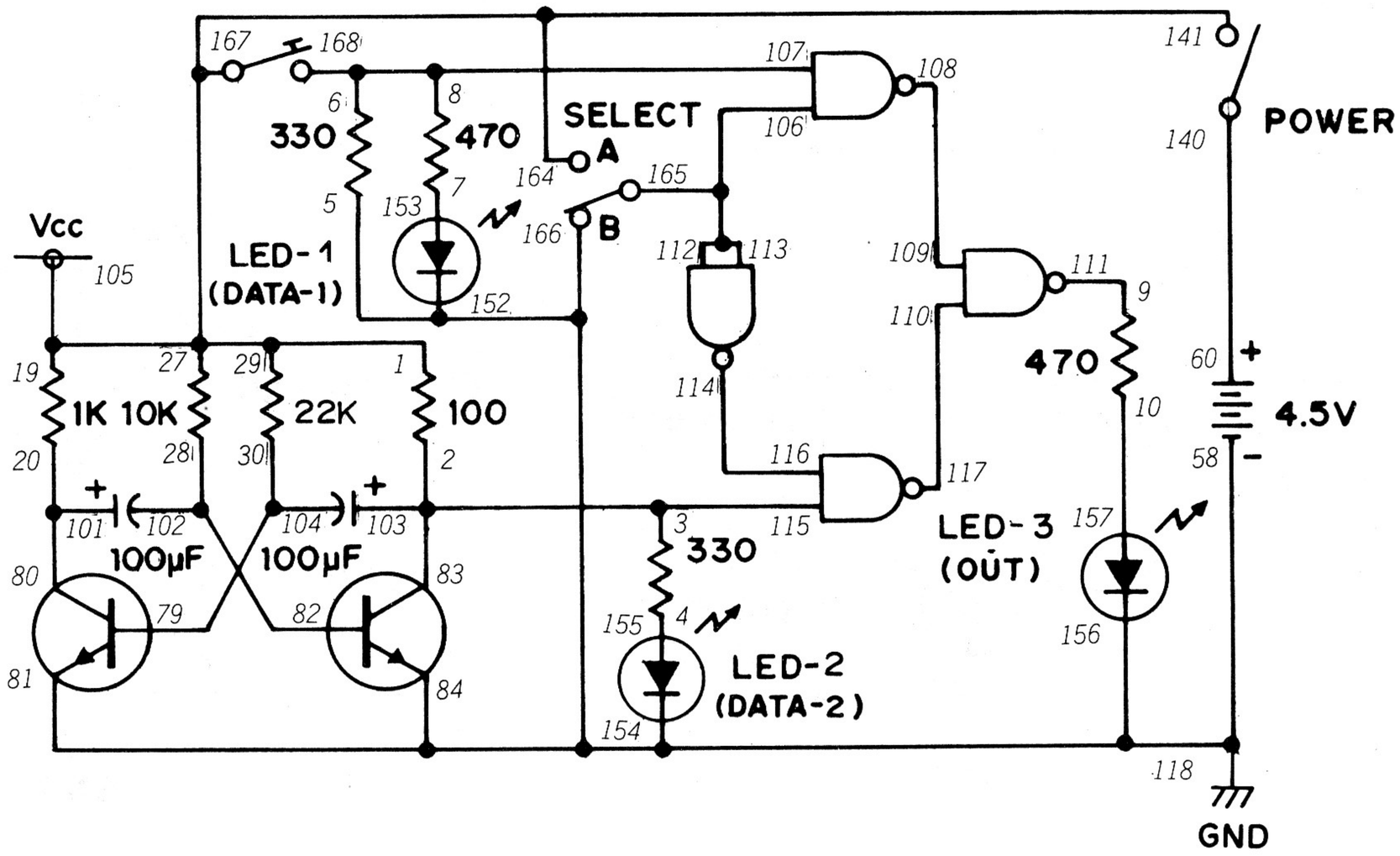

Out last Project let you see how data could be sent to two or more different outputs. You can probably think of some situations where we might want to (or need to) do the opposite – send data from two or more different sources to one output. This circuit will let us see how this can be done.

When you look at the schematic for this Project, you'll notice two different input sources. One is provided by the multivibrator circuit when the Select Switch is set to B. But when the Select Switch is set to A, the input signal is provided by ..... can you guess? (And don't peek at the answer.)

Yourself! You provide the input signal by pressing and releasing the Key.

To see how this circuit works, set the Select Switch to A when you build this Project. When you finish, turn the Control Knob to ON and watch both LED 1 and LED 3. Is anything happening? Now press the Key and see what happens to LED 1 and LED 3. Does LED 3 go on and off in step with LED 1. Now set the Selector Switch to B. LED 3 will still go on and off. Try pressing the Key now – does it have any effect on LED 3? What does LED 2 do when you press the Key while the Selector Switch is at B?

More complex versions of these circuits are found in computers and other highly advanced digital circuits. And – as you probably suspect – switching from one input channel to another is done electronically in most cases.

NOTES



Wiring Sequence

1-19-27-29-141-164-167-105, 3-2-83-103-115, 4-155, 5-152-154-156-166-81-84-58-118, 7-153, 8-6-107-168, 9-111, 10-157, 20-80-101, 28-82-102, 30-79-104, 60-140, 106-113-112-165, 108-109, 110-117, 114-116.

142. TTL R-S FLIP-FLOP I

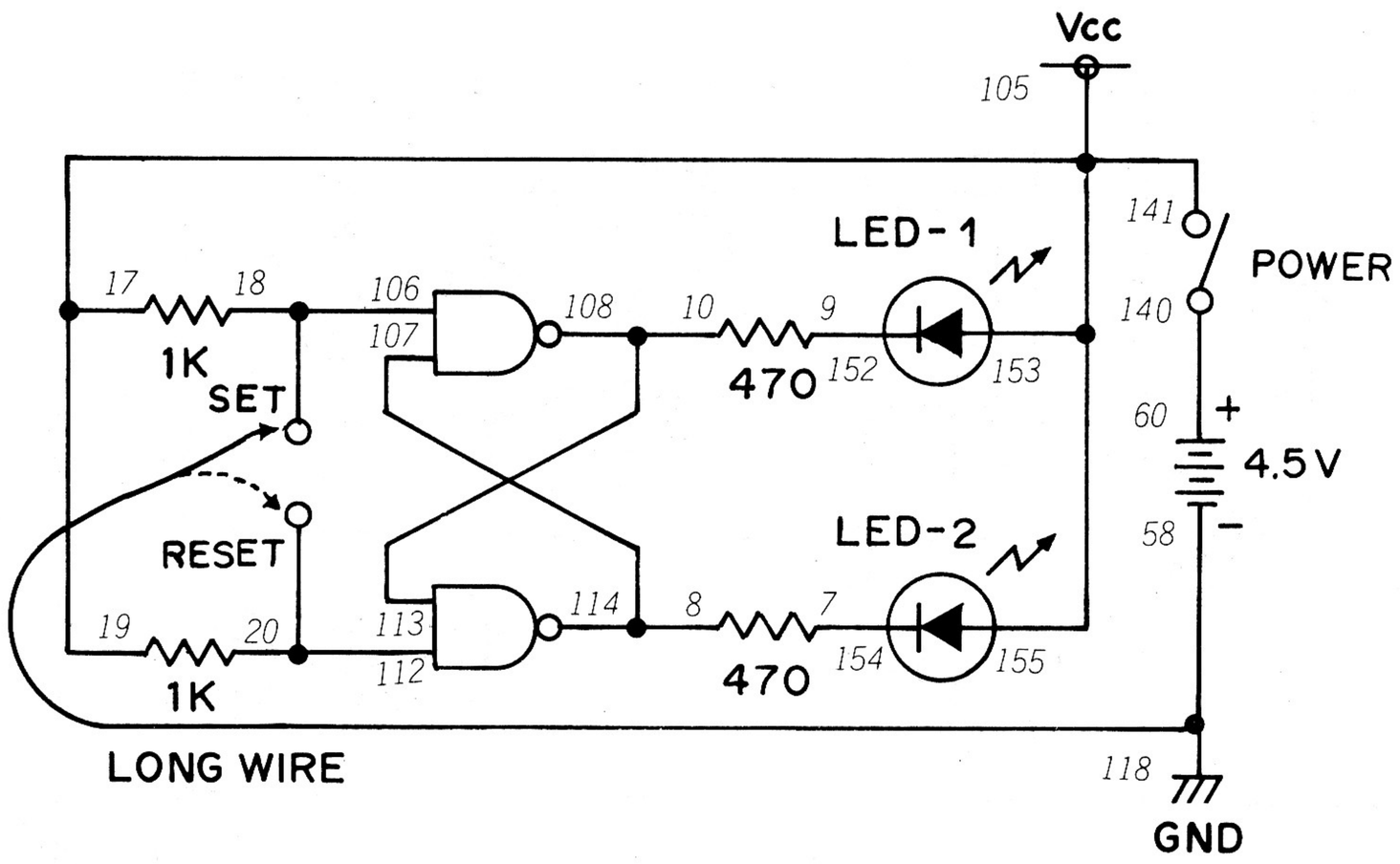

Even though your Kit includes a J-K Dual Flip-Flop IC, it's possible to build an R-S flip-flop using NAND gates. This Project will prove it! (If your memory needs refreshing about how an R-S flip-flop works, take a look back at Project 70.)

After you finish the wiring connections, turn the Control Knob to ON. Either LED 1 or LED 2 will light up. Take the long wire and touch terminals 106 and 112 in turn. What happens to LED 1 and LED 2? Can you guess which represents the set state and which represents the reset state?

When LED 2 lights up, the R-S flip-flop is in the set state. When LED 1 lights up, the R-S flip-flop is reset. When you get the flip-flop set or reset, try *removing* the long wire from the circuit and see what happens.

You see one of the prime characteristics of the R-S flip-flop – once the circuit is set or reset, the circuit keeps that state until an input signal causes it to change. This means the R-S flip-flop can "remember" things. More advanced circuits like this one are used in computers so they can "remember" things as well.

NOTES

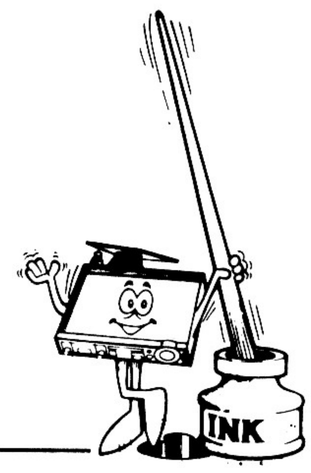

Wiring Sequence

7-154, 8-114-107, 9-152, 10-113-108, 17-19-141-153-155-105, 18-106(SET), 20-112(RESET), 58-118-LONG WIRE, 60-140.

143. TTL R-S FLIP-FLOP II

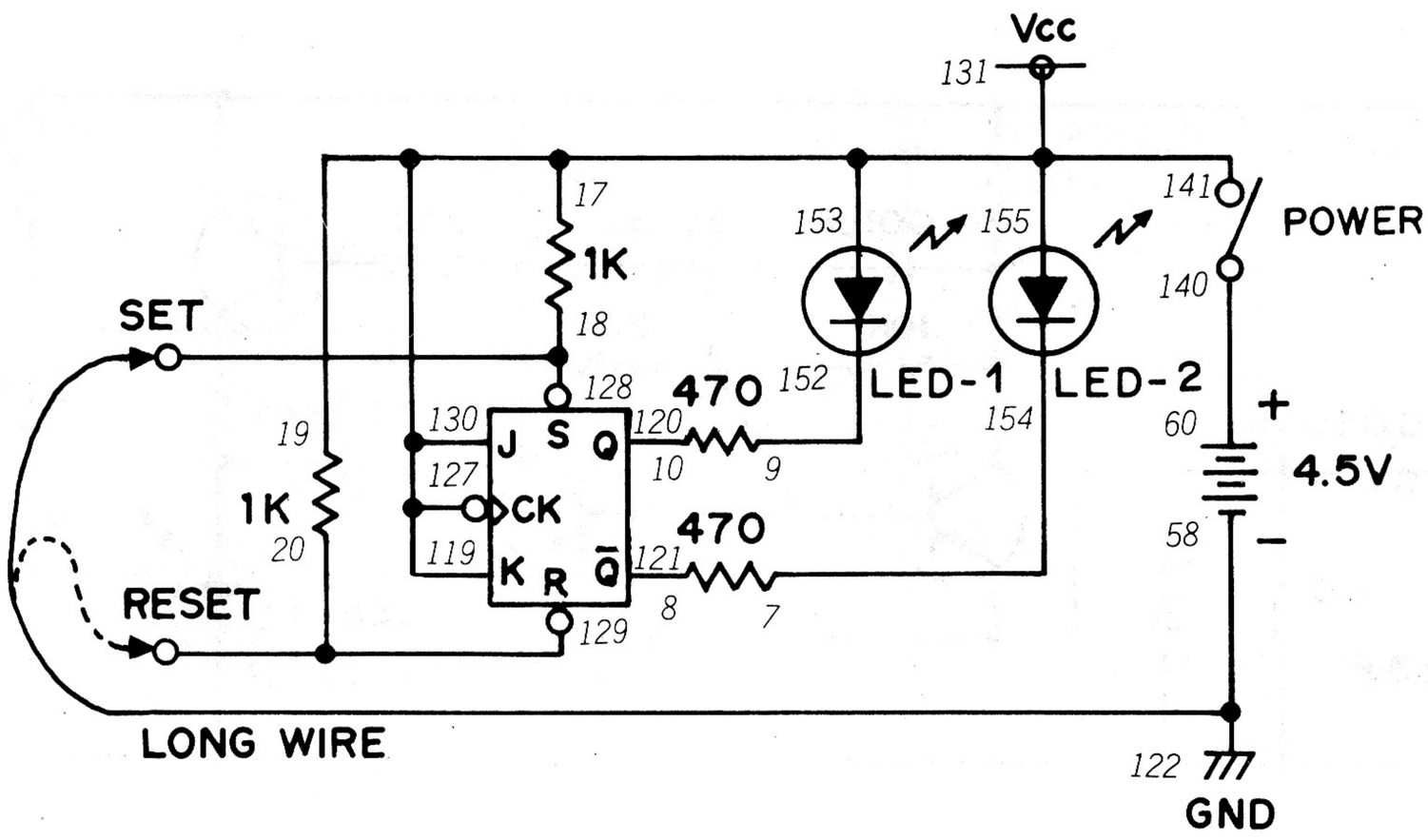

One of the integrated circuits in your Kit is known as a "Dual J-K Flip-Flop." Inside of that tiny IC are **two** R-S flip-flop circuits, like the one you built back in Project 70! ICs are true wonders, letting us use several circuits in a small space. Here's a Project that will let you see how to use this particular one.

When you finish wiring this Project, rotate the Control Knob clockwise until you hear a "click" to switch ON power. Take the long wire and touch terminal 128. Does anything happen to LED 1 or LED 2 ? Now touch terminal 129 with the long wire. Is there any change in LED 1 or LED 2. Can you figure out which terminal is the set input and which is the reset input? (Okay, here's a hint ..... do you remember what Q and $\bar{Q}$ stand for?)

This shouldn't have been two hard for you ..... terminal 128 is the set terminal while 129 is the reset terminal!

You can see by the schematic that R and S aren't the only inputs to the flip-flop – there's also a J and K input. *(So that's why it's called a J-K flip-flop!)* What do you think these J and K inputs are used for? Make some notes about what you think ..... because we're soon going to find out.

NOTES

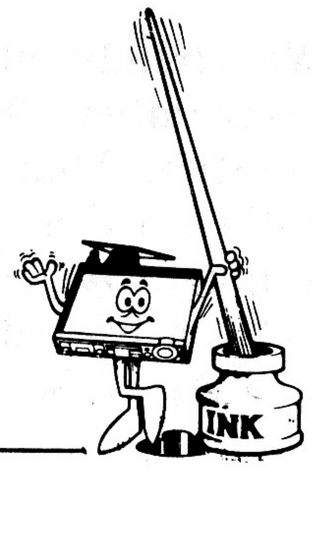

Wiring Sequence

7-154, 8-121, 9-152, 10-120, 17-19-141-153-155-127-130-131-119, 18-128(SET), 20-129(RESET), 58-122-LONG WIRE, 60-140.

144. TRANSISTORIZED TOGGLE FLIP-FLOP

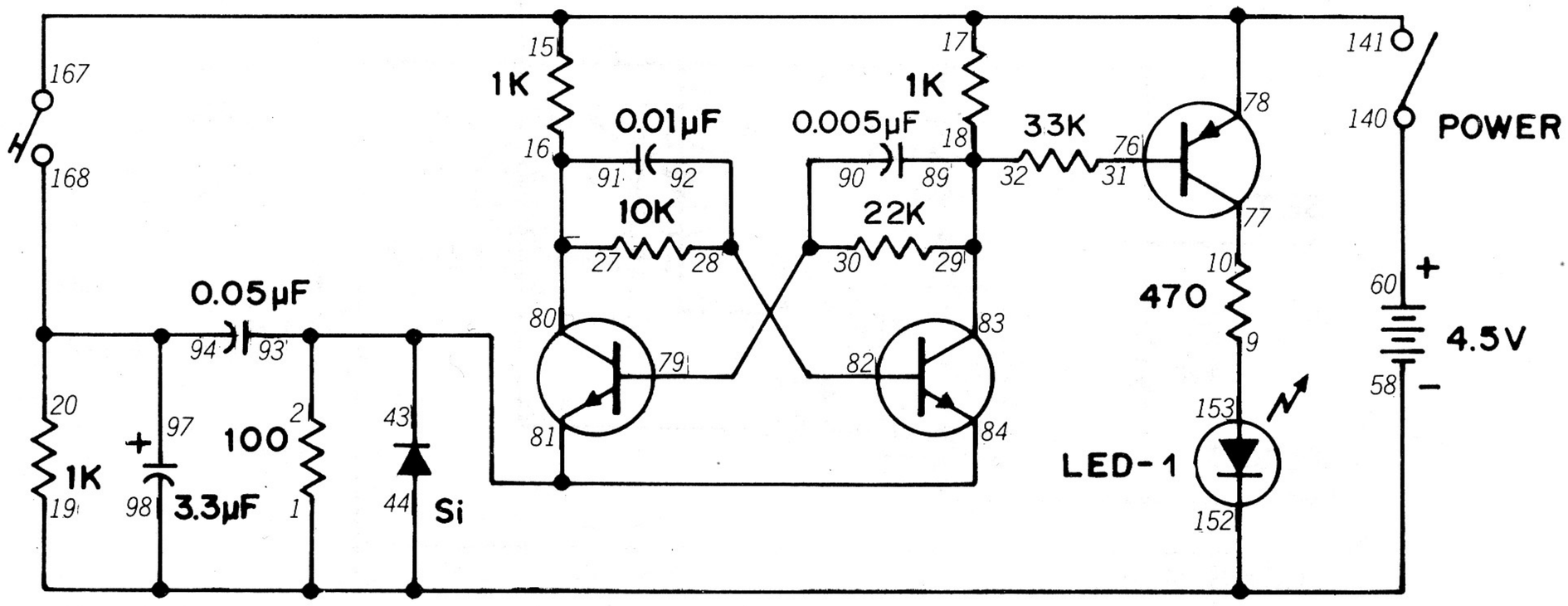

Do you know what a "toggle" is? *(No, it's not someone from the nation of Togg!)* A *toggle switch* is used in electronics to turn circuits on and off ..... and that should give you a big hint about how toggle flip-flop circuits work!

After you build this circuit, turn the Control Knob to ON. Is there any change in LED 1? Now press the Key and see what happens to LED 1. Can you explain what is happening?

As you may have guessed by now, a toggle flip-flop is one that sets or resets *only* when a signal has been received for it to do so, no matter what the inputs tell the circuit to do. This is very handy when we're working with flip-flop circuits. Suppose we have several flip-flop circuits receiving inputs at different times, but we only want them to set or reset together. Using toggled flip-flops means that we can make sure that none of them set or reset until we give them the signal.

We already mentioned that flip-flop circuits can "remember" things thanks to their set and reset abilities. That means several flip-flop circuits controlled by a single toggle signal can operate together to "remember" more and more things. (That's basically how big computers "remember" all they do.)

NOTES

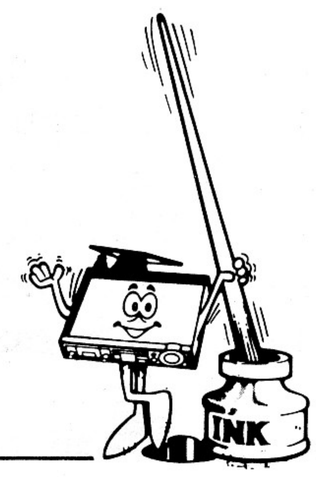

Wiring Sequence

1-19-44-152-98-58, 2-43-84-81-93, 9-153, 10-77, 15-17-78-141-167, 16-27-91-80, 18-29-32-83-89, 20-94-97-168, 28-82-92, 30-79-90, 31-76, 60-140

145. NAND TOGGLE FLIP-FLOP

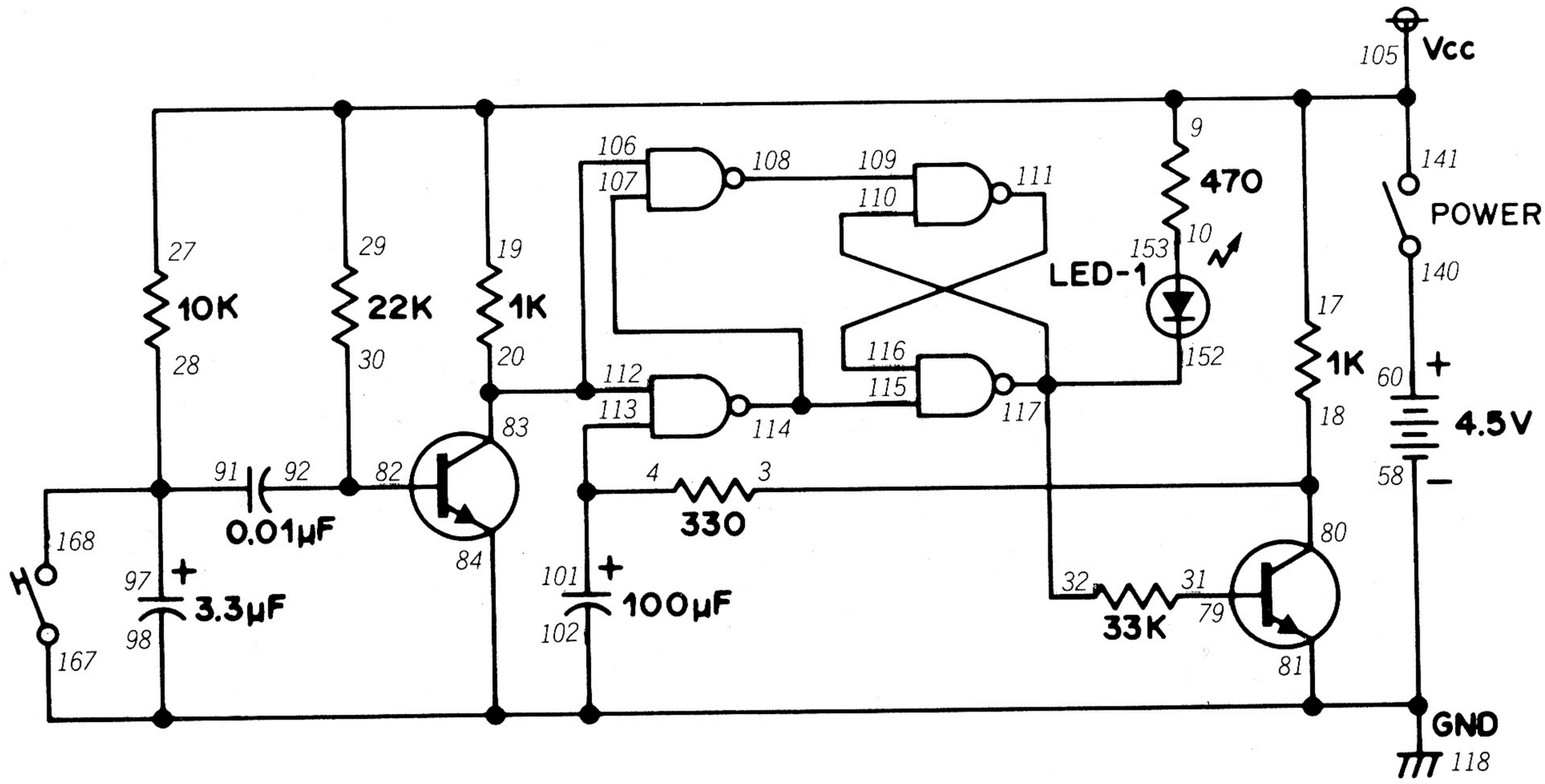

If you're starting to suspect that the NAND gate is a very versatile circuit, you're right! Here's a toggle flip-flop circuit made from four NAND gates.

Turn the Control Knob clockwise to ON after you finish building this circuit. Press the Key several times. You'll see that LED 1 turns on and off each time the Key is pushed.

Put on your thinking cap and try to trace what happens from the Key input to LED 1. Of the four NANDs, two function as an R-S flip-flop. See if you can figure out what the remaining NANDs are doing.

This circuit is also an inverter of sorts, since it does take the input and "reverse" it.

NOTES

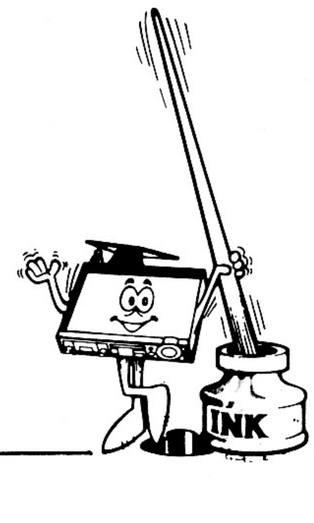

Wiring Sequence

3-18-80, 4-101-113, 9-19-17-27-29-141-105, 10-153, 20-83-112-106, 28-91-97-168, 30-82-92, 31-79, 32-110-117-152, 58-118-84-81-98-102-167, 60-140, 107-114-115, 108-109, 111-116

146. J-K TOGGLE FLIP-FLOP

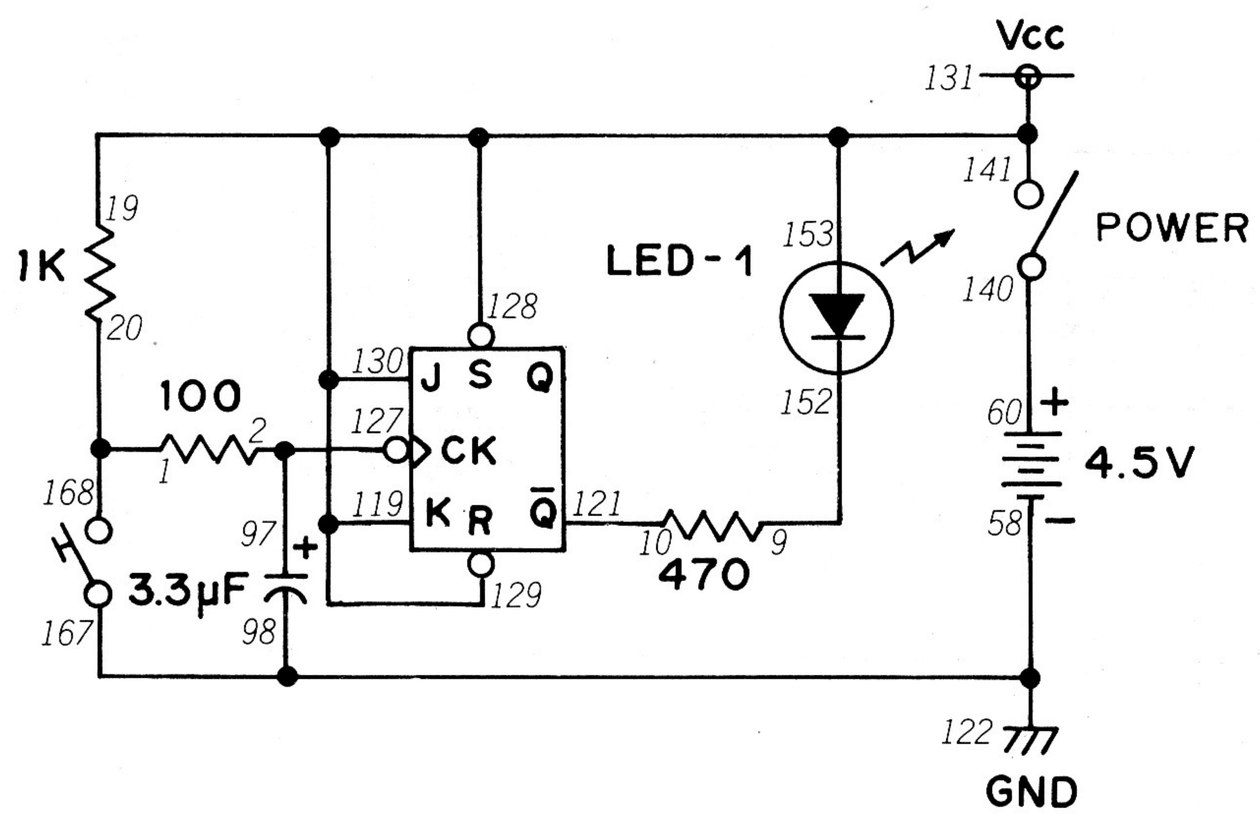

The two flip-flop circuits contained in the Dual J-K Flip-Flop IC in your Kit can be used in "toggled" applications. This Project will show you how it's done.

You can easily see how this circuit works by examining the schematic diagram. When you press the Key, you input a clock signal to the flip-flop, allowing it to quickly set and reset. And, as you can also see on the schematic, the output at $\overline{Q}$ is used to control LED 1.

You're probably wondering how a J-K flip-flop circuit is different from an R-S flip-flop. The difference is in the J and K inputs – they're another way of controlling the flip-flop!

Here's how J and K control the flip-flop: when both J and K are 0, Q stays at its last value (either 0 or 1) *regardless* of what the clock input is. When this happens, we say the flip-flop is *latched*. (For this operaiton, both R and S inputs must be at 1.)

But suppose that J is 0 and K is 1. When this happens, the flip-flop will reset when the clock changes from 1 to 0. When J is 1 and K is 0 the opposite will happen ... flip-flop.

When both J and K are at 1, every time the clock input changes from 1 to 0, it will reset and set alternately.

One interesting use for J-K flip-flops is in "master and slave" circuits *(no, you don't use these circuits to build pyramids!)*. A "master and slave" arrangement takes the output of one flip-flop (the master) and uses it for the J and K inputs of a second flip-flop (the slave). Both the master and slave flip-flops use the same clock signal.

Think a little bit about what could be done with a "master and slave" J-K flip-flop arrangement. Can you figure out a why to make such an arrangement "count?" Be sure to make some notes about what you think!

NOTES

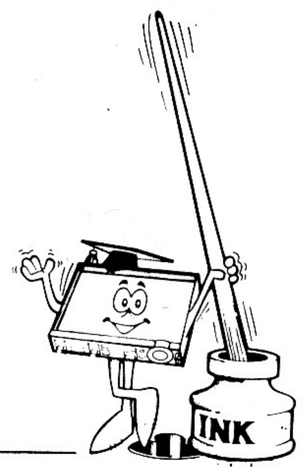

Wiring Sequence

1-20-168, 2-97-127, 9-152, 10-121, 19-141-153-119-128-129-130-131, 58-122-98-167, 60-140.

147. TTL ASTABLE MULTIVIBRATOR

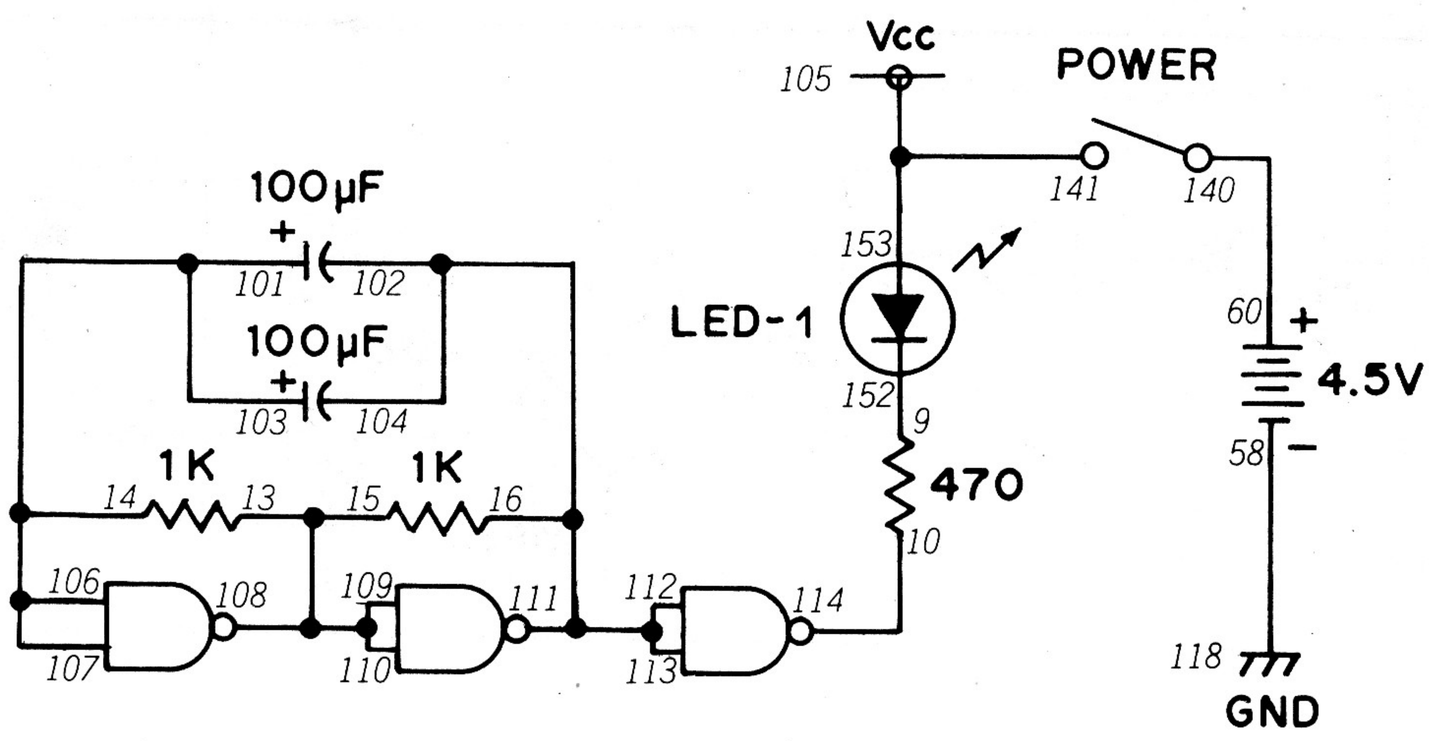

Even multivibrator circuits can be made from NAND gates. This Project is an example of an *astable* multivibrator – can you guess what that means? Make a guess, and then build this Project to find out.

Turn the Control Knob to ON after you finish making all the wiring connections. You'll see LED 1 flashing on and off. This is like the operation of many of the multivibrators we've used in earlier circuits. *Astable* means the multivibrator keeps switching back and forth between 0 and 1. As you remember, that's what most of the multivibrators you've built so far do.

You shouldn't have much trouble figuring out how this particular circuit works ..... and yes, those two 100 µF capacitors make it all possible. Try using the other electrolytic capacitors in place of the 100 µF values and see what effect they have on LED 1 (be sure to observe correct polarity). If you want to see the output of this circuit in a different way, try adding the Meter and Control in place of LED 1 ..... it can be done, but we'll let you figure out how.

By now you can see why NAND gate ICs are so popular. The Quad 2-input NAND IC in your Kit is one of the most widely used electronic components in the world, mainly because it can be used in so many different ways *(and you can probably think of many more!)*.

NOTES

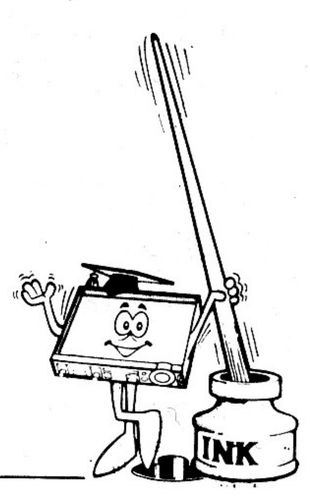

Wiring Sequence

9-152, 10-114, 13-15-108-109-110, 14-101-103-106-107, 16-102-104-112-113-111, 58-118, 60-140, 105-153-141.

148. TTL J-K FLIP-FLOP

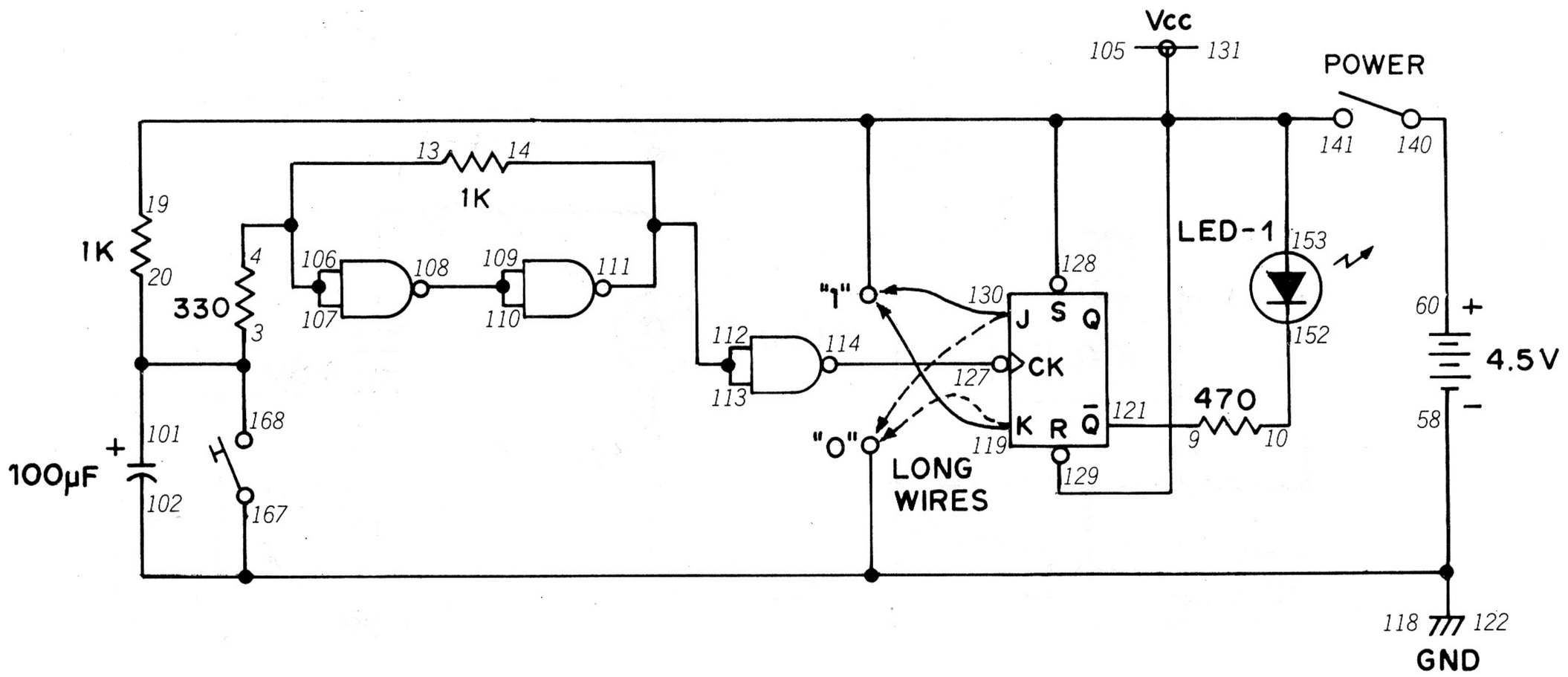

In Project 146 you saw how a flip-flop circuit can be "toggled" so that we can have additional control over it. TTL circuits can be used to provide this added control, as this Project will demonstrate.

You can see by the schematic that you'll provide the clock signal for this circuit each time you press the Key. The signals for the J and K inputs are provided by touching the long wires from terminals 119 and 130 to other terminals.

After you build this Project, turn the Control Knob to the right to switch power ON and press the Key a few times. You'll see LED 1 go on and off. Now take the long wire from terminal 130 and connect it to terminal 118. Press the Key a few times. What happens to LED 1? Disconnect the long wire from terminal 118 and press the Key again. Is there any difference in what LED 1 does?

Take the long wire from terminal 119 and connect it to terminal 118. Press the Key several times. What does LED 1 do now? Disconnect the long wire from terminal 118 and press the Key again. What happens to LED 1?

As you may have figured out, if both the J and K inputs are 1, the flip-flop will set and reset each time you press the Key (which inputs a clock signal). This means LED 1 will go on and off. But if you connect the long wire from terminal 1 30 to terminal 118, this makes the J input 1 and the K input 1. This means LED 1 will go out when the flip-flop receives a clock signal and will stay out. When the long wire from terminal 119 is connected to terminal 118, the J input is 1 while the K input is 0. This means LED 1 lights with a clock signal and stays lit.

Time to put on your thinking cap – can you think of some of the interesting things that could be done of you used different types of multivibrator circuits for the clock, J and K inputs? Try whipping up some circuits to see if you're right.

NOTES

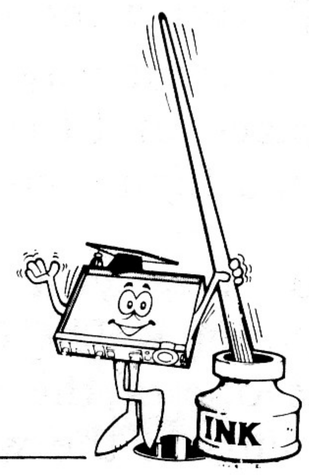

Wiring Sequence

3-20-101-168, 4-13-106-107, 9-121, 10-152, 14-112-113-111, 19-141-153-128-129-131-105, 58-118-122-102-167, 60-140, 108-109-110, 114-127, 119-LONG WIRE(K), 130-LONG WIRE(J).

149. TTL D FLIP-FLOP

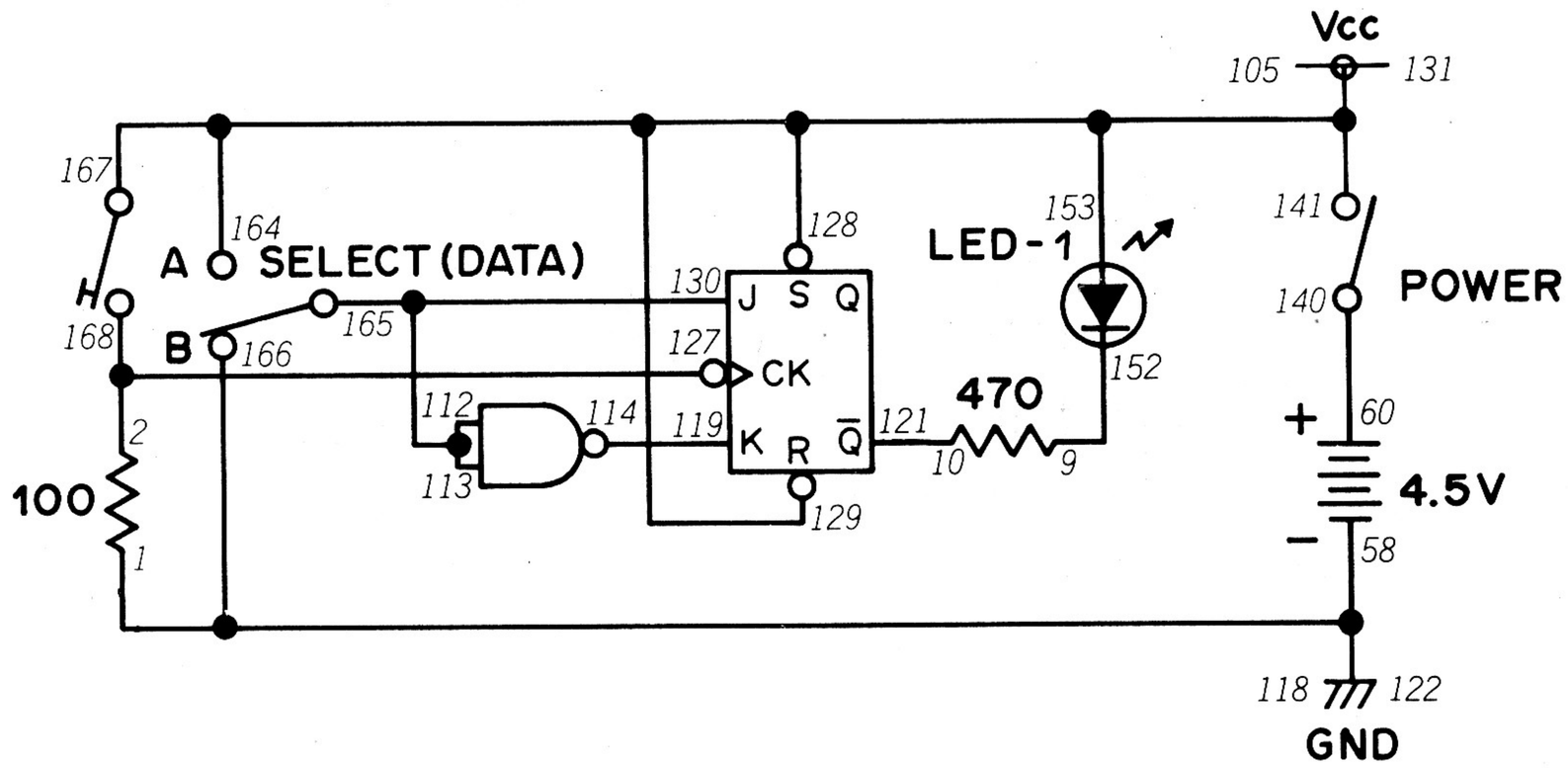

Can you guess what the "D" in "TTL D Flip-Flop" stands for? Make a quick mental note because you're about to find out.

As you build this experiment, set the Select Switch to either A or B and turn the Control Knob to OFF. After you finish the wiring connections, turn Control Knob to ON. Press the Key and release it. If you set the Select Switch to A, LED 1 will light up. If the Select Switch is at B, LED 1 will go out. Now try moving the setting of the Select Switch back and forth between A and B without pressing the Key. Can you get LED 1 to change without pressing the Key?

As you can see on the schematic, pressing the Key inputs a clock signal. There's also just one input signal provided by setting the Select Switch to A or B. The "D" in this circuit's name comes from "delay" – no matter how the J or K input changes, the output change is *delayed* until the clock signal is received.

NOTES

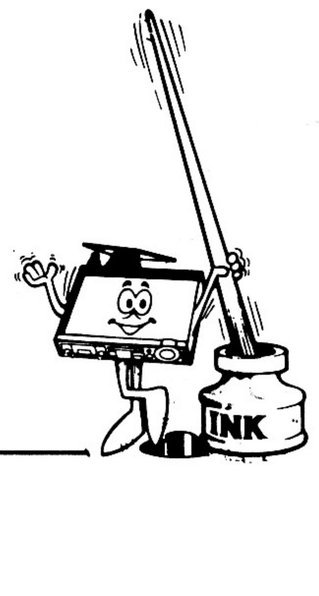

Wiring Sequence

1-58-118-122-166, 2-127-168, 9-152, 10-121, 60-140, 105-128-129-131-167-164-153-141, 112-113-130-165, 114-119.

150. TTL LATCH CIRCUIT

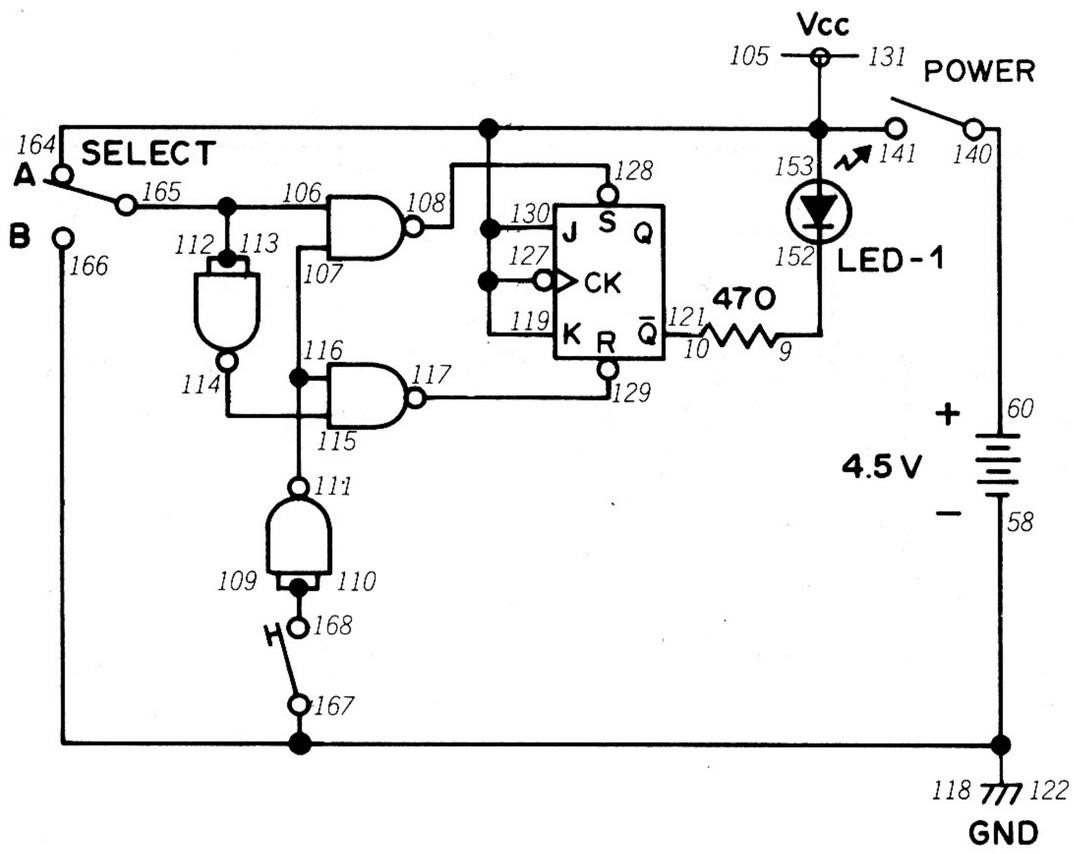

This is another circuit whose name describes how it works – so make a guess before building this Project and finding out for sure.

As you build this Project, set the Select Switch to A. When you finish the wiring connections, turn the Control Knob clockwise to switch power ON and press the Key. You'll see LED 1 light up. Now switch the Select Switch back and forth from A to B. What does LED 1 do?

Now set the Select Switch to B and press the Key again. You'll see that LED 1 goes out. Move the Select Switch from B to A and back again. Is there any change in LED 1?

You can easily see where the latch circuit gets its name. The circuit can "latch" in a certain condition and keep the same output regardless of changes in the input. We can use latch circuits to control the operations of electronic devices since it will maintain a certain output until we send a signal to cause a change – we don't have to keep sending an input signal to the latch circuit continuously. This means just a touch can activate a latch circuit ... just as you saw in this Project.

NOTES

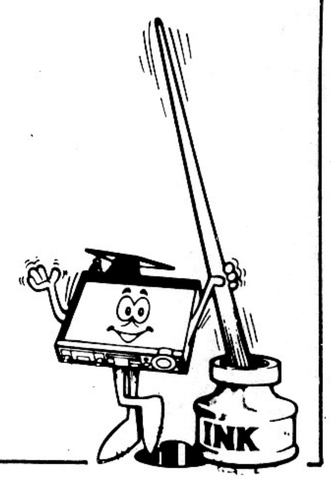

Wiring Sequence

9-152, 10-121, 58-118-122-167-166, 60-140, 105-119-127-130-131-164-153-141, 106-112-113-165, 107-116-111, 108-128, 109-110-168, 114-115, 117-129.

151. SHIFT REGISTER

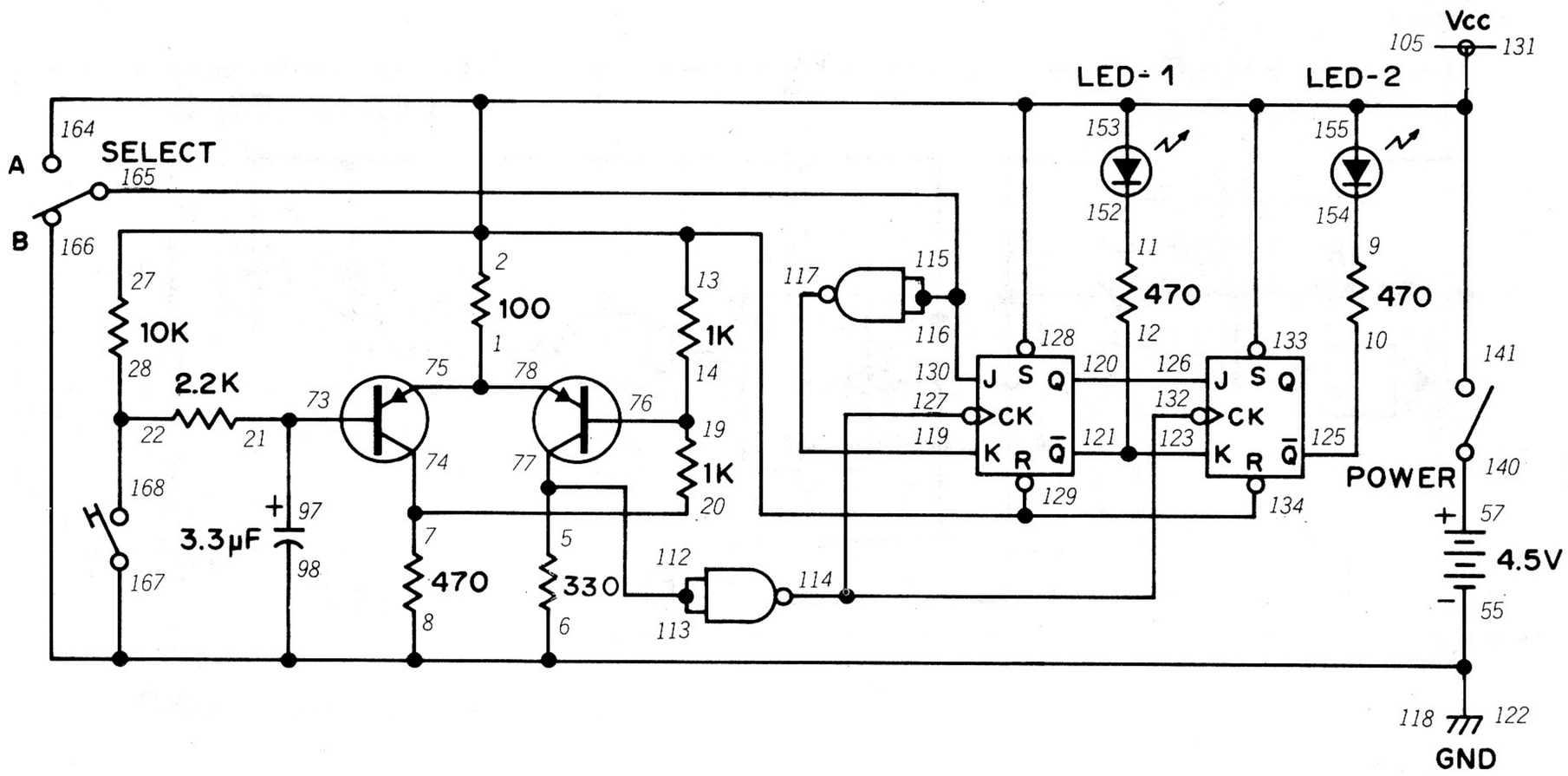

What's a shift register? If you've used a hand-held electronic calculator, you've already seen one in action. This Project is a simple shift register that will let you discover how the circuit works.

There's a lot of connections to be made in wiring this Project, so take your time and double-check your work as you go along. Set the Select Switch to B before turning the Control Knob to ON. When you turn the Control Knob to ON, and press the Key several times, you'll see that both LED 1 and LED 2 are off. Now move the Select Switch to A and press the Key once. LED 1 will light. Now press the Key and again and LED 2 will light as well. Both will stay lit no matter how many more times you press the Key.

Now set the Select Switch to B and press the Key once. What happens? Press the Key again. Is there any change? Keep pressing the Key a few more times and see if anything else happens.

A shift register is a circuit used to store information by shifting it from one flip-flop to another. You saw this shifting take place as you pressed the Key and the LEDs lit or went off. In calculators, a more complex version of this circuit causes the number "10" to appear on the calculator display when you add 1 to 9.

NOTES

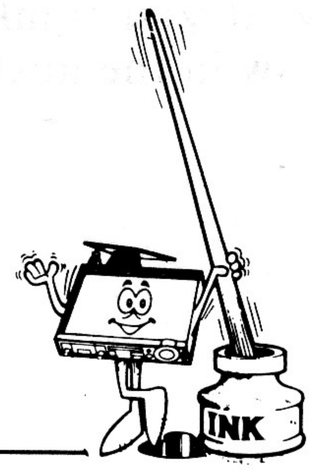

Wiring Sequence

1-75-78, 5-77-112-113, 6-8-98-166-167-122-118-55, 7-20-74, 9-154, 10-125, 11-152, 12-121-123, 14-19-76, 21-73-97, 22-28-168, 27-13-2-141-153-155-164-128-129-131-133-134-105, 57-140, 114-127-132, 116-115-130-165, 117-119, 120-126.

152. BASIC COUNTER CIRCUIT

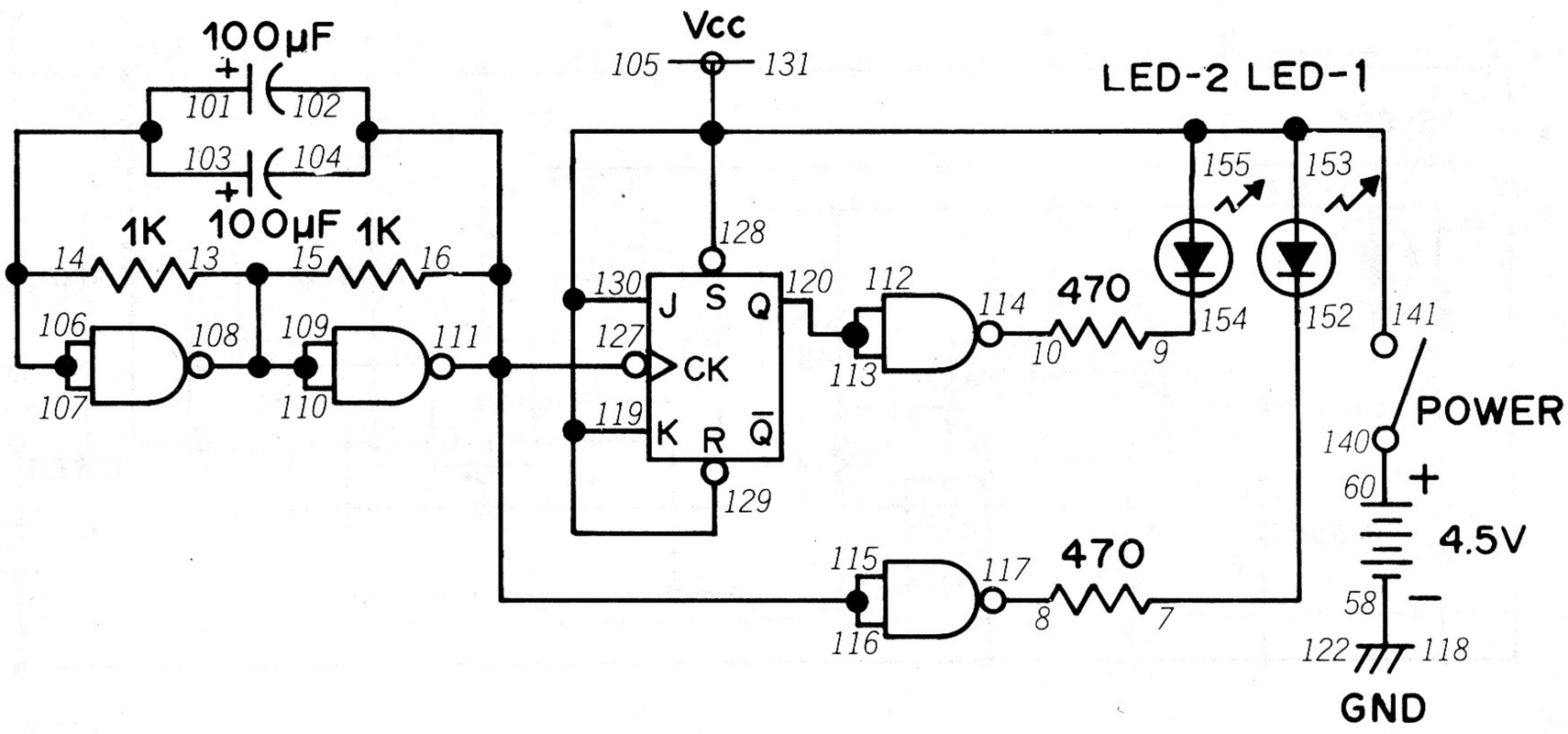

We've mentioned from time to time in earlier Projects that digital circuits can "count." Here's a Project that's an example of a very simple *counter* circuit.

You'll see a NAND multivibrator circuit in the schematic for this Project. The output of the multivibrator serves a double purpose here – it turns LED 2 on and off and also serves as a clock impulse for the flip-flop. Set the Control Knob clockwise to switch power ON. The result is that LED 1 and LED 2 flash on and off in turn.

But if you think about this circuit for a moment, you'll realize that it is actually counting the pulses made by the multivibrator. Of course, since there's only two pulses from the multivibrator, this counter circuit doesn't count very high. Yet the same principle is used for other counter circuits. Can you figure out how to use flip-flops to make counters which can count higher? Keep notes on what you think ... because we're going to find out how in the next few Projects.

NOTES

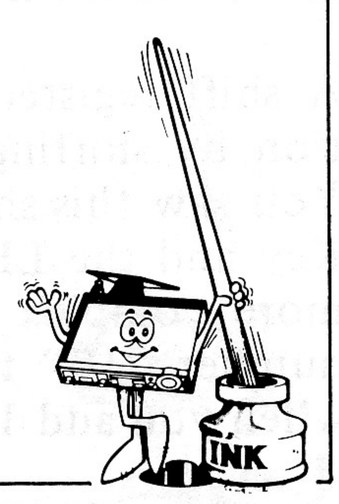

Wiring Sequence

7-152, 8-117, 9-154, 10-114, 13-15-108-109-110, 14-101-103-106-107, 16-102-104-127-115-116-111, 58-118-122, 60-140, 105-119-128-129-130-131-155-153-141, 112-113-120.

153. SYNCHRONOUS COUNTER

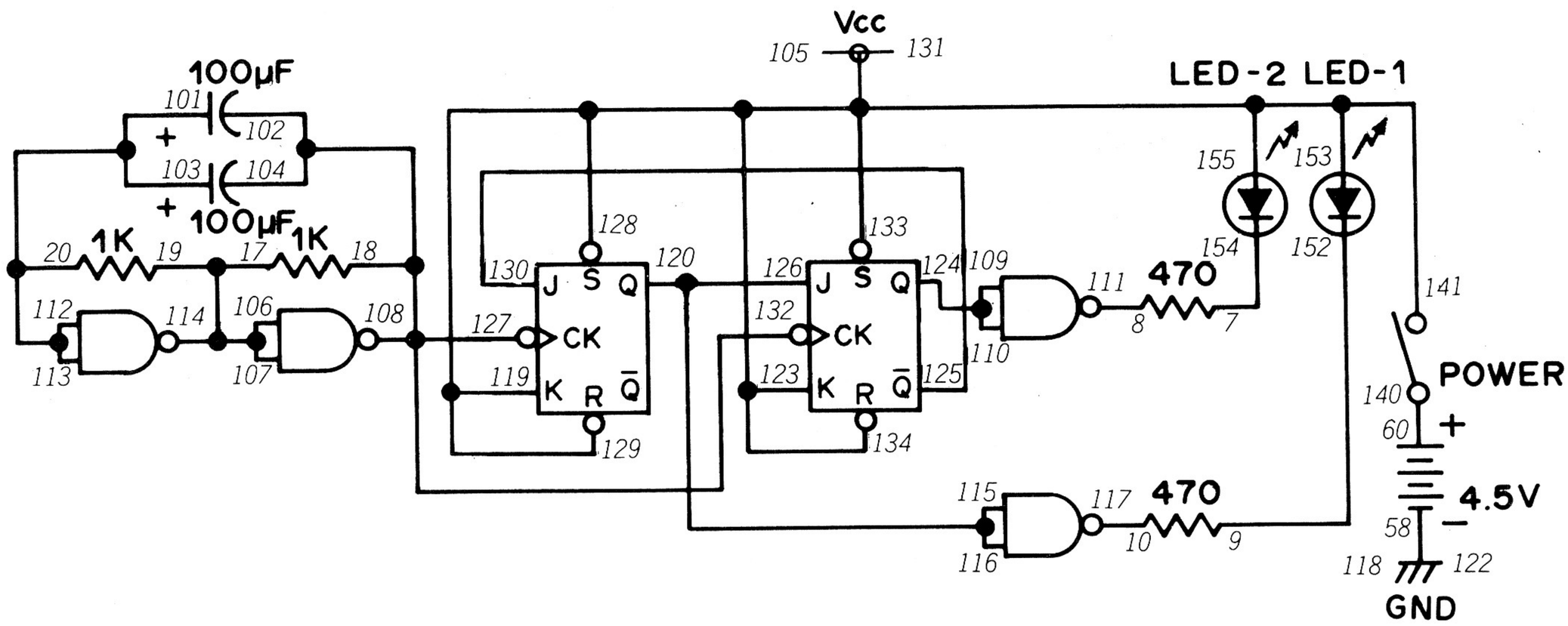

Here's another counter circuit which can count up to three. It's called a *synchronous* counter – do you have any idea what that means? And can you guess how it can count to three using only two LEDs? Take a guess before building this Project.

Once you finish the wiring connections, turn the Control Knob to ON and watch the LEDs. Both LEDs are blinking. When both LEDs are off, that stands for 1. Then LED 2 will light while LED 1 will be off. That's the same as 2. Finally, LED 1 will light while LED 2 will be off. That's 3 – so this circuit can really count up to three. You'll see the LEDs both go out after three is reached and the entire cycle will start over.

A synchronous counter is one where the clock signal is input to all flip-flops at the same time. You can see from the schematic that each flip-flop gets a clock signal directly from the multivibrator. This is how we manage to keep the two flip-flops "in step" with each other – something very important in a counting circuit.

NOTES

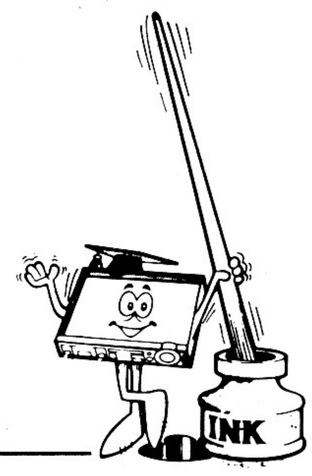

Wiring Sequence

7-154, 8-111, 9-152, 10-117, 18-102-104-127-132-108, 19-17-106-107-114, 20-103-101-112-113, 58-118-122, 60-140, 105-119-123-134-133-131-129-128-155-153-141, 110-109-124, 120-115-116-126, 125-130.

154. ASYNCHRONOUS COUNTER

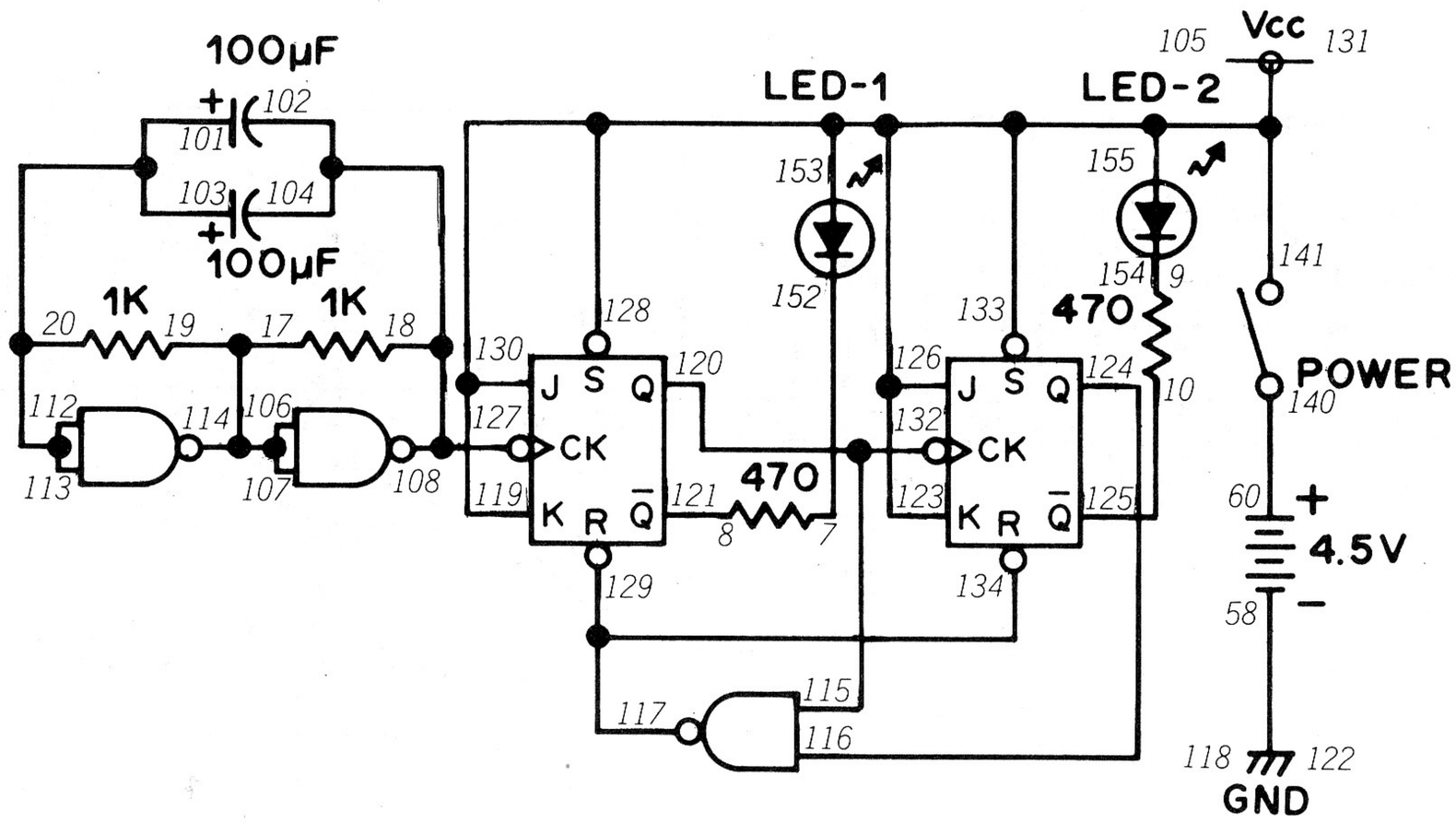

Since we just found out about synchronous counters, can you guess what an *asynchronous* counter is and how it works? Make it quick – you're about to build one.

You'll find this Project works almost exactly like the counter in the previous project. When you turn the Control Knob to ON, you'll see that the LEDs operate as follows. After both LEDs are off, then LED 1 will light while LED 2 stays off. Then LED 2 will light while LED 1 goes out. Then both LEDs will be off and the cycle will start all over again.

The key difference between synchronous and asynchronous counters can be found by comparing the schematic diagrams of this Project and the last one. In a synchronous counter each flip-flop has its own clock signal input. But in an asynchronous counter (such as this one), the clock input for the second flip-flop comes from one of the outputs of the first flip-flop. It comes from the Q output of the first flip-flop in this Project.

The difference between synchronous and asynchronous counters might seem to be trivial but it's not. It takes time for the first flip-flop to set or reset and produce a clock signal for a second flip-flop. When many flip-flop circuits are used (such as in a computer), this delay from the first flip-flop to the second can produce quite an error. That's why synchronous counters are always preferred in circuits that are elaborate or where accuracy is important.

In fact, you might be able to notice one side effect of an asynchronous circuit now. Look carefully at the LEDs in this Project as they light on and off – can you spot any occasion where both LEDs are lit (even if only briefly)?

NOTES

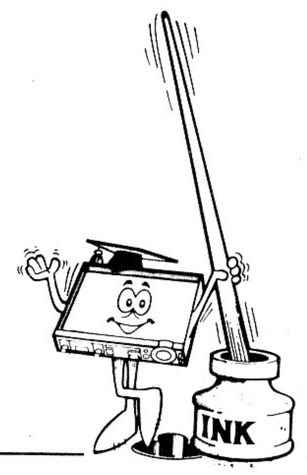

Wiring Sequence

7-152, 8-121, 9-154, 10-125, 18-102-104-127-108, 19-17-106-107-114, 20-103-101-112-113, 58-118-122, 60-140, 105-119-123-126-133-131-130-128-155-153-141, 115-120-132, 116-124, 117-134-129.

155. COUNTER WITH LINE DECODER

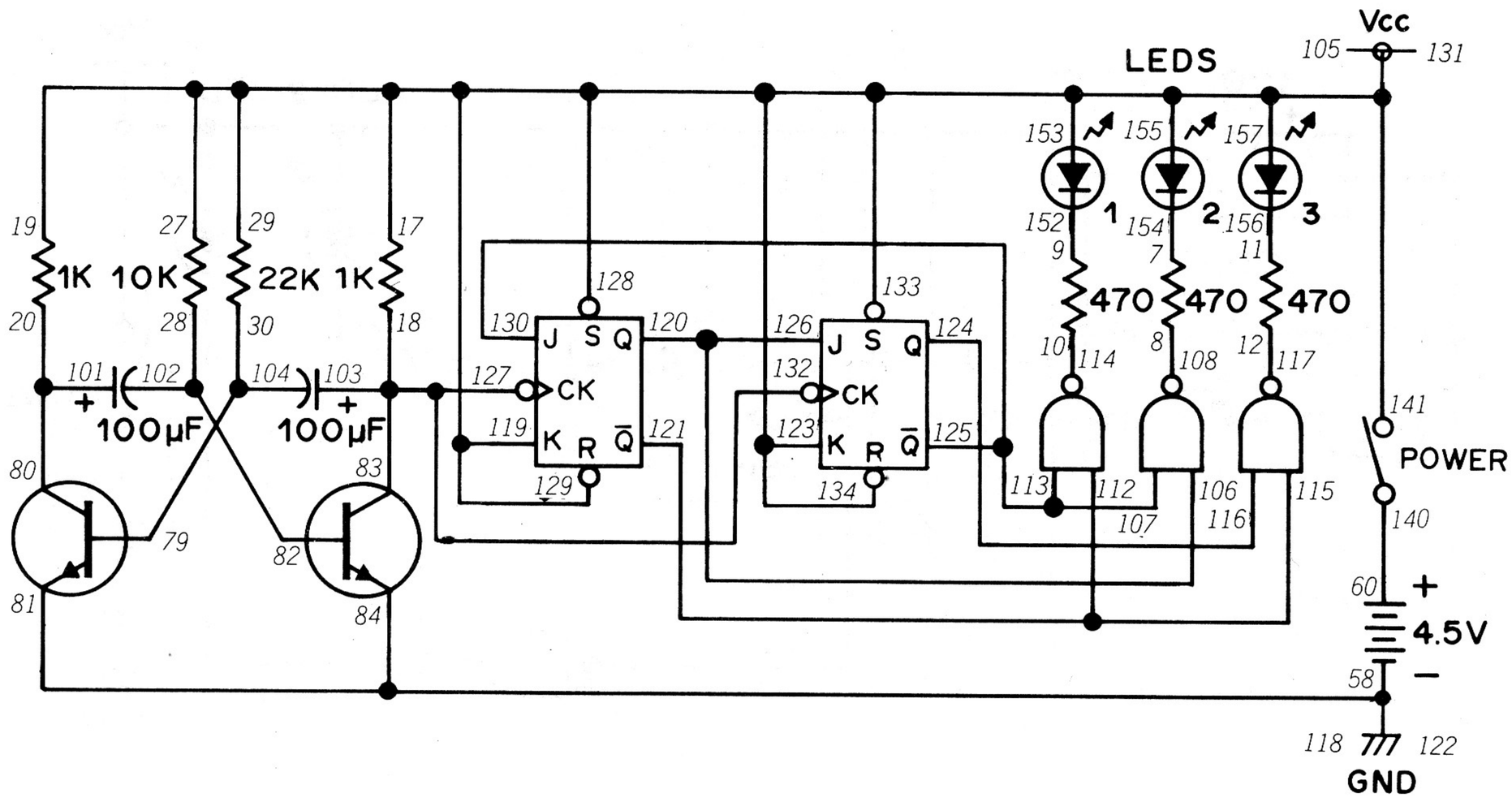

Here's a more refined counter circuit that counts up to three and uses three LEDs to indicate the count. It's a bit more difficult to count to three using three LEDs instead of two, so we have to add another circuit known as a *line decoder* to the counter circuit. You can locate the line decoder in the schematic – it's the group of NAND gates connected to the three LEDs.

You probably recognized the multivibrator circuit in the schematic. When you turn the Control Knob to the right to switch power ON, you'll see LEDs 1, 2 and 3 light on and off in order. The counter circuit is ... (can you guess? Dont't peek.)

It's a synchronous counter. Notice how each flip-flop has its own clock input signal from the multivibrator??

Here's a brain excercise that'll really keep you going for a while ... can you trace the 0 and 1 inputs from the multivibrator and follow them through the counter to the LEDs? It's not that difficult to trace, and it will give you a good idea how a counter circuit like this works. *Try it and see.*

NOTES

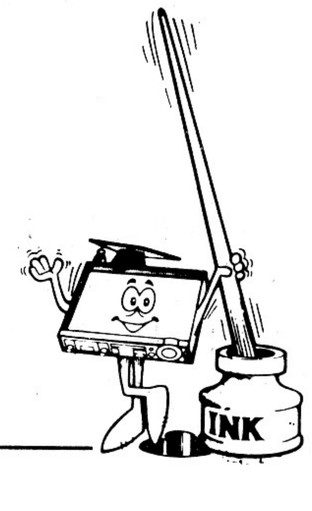

Wiring Sequence

7-154, 8-108, 9-152, 10-114, 11-156, 12-117, 18-83-103-127-132, 20-80-101, 28-82-102, 29-27-17-19-141-153-155-157-128-129-131-133-134-123-119-105, 30-79-104, 60-140, 81-84-58-118-122, 106-120-126, 107-113-125-130, 115-112-121, 116-124.

156. DIVIDE BY 4 COUNTER

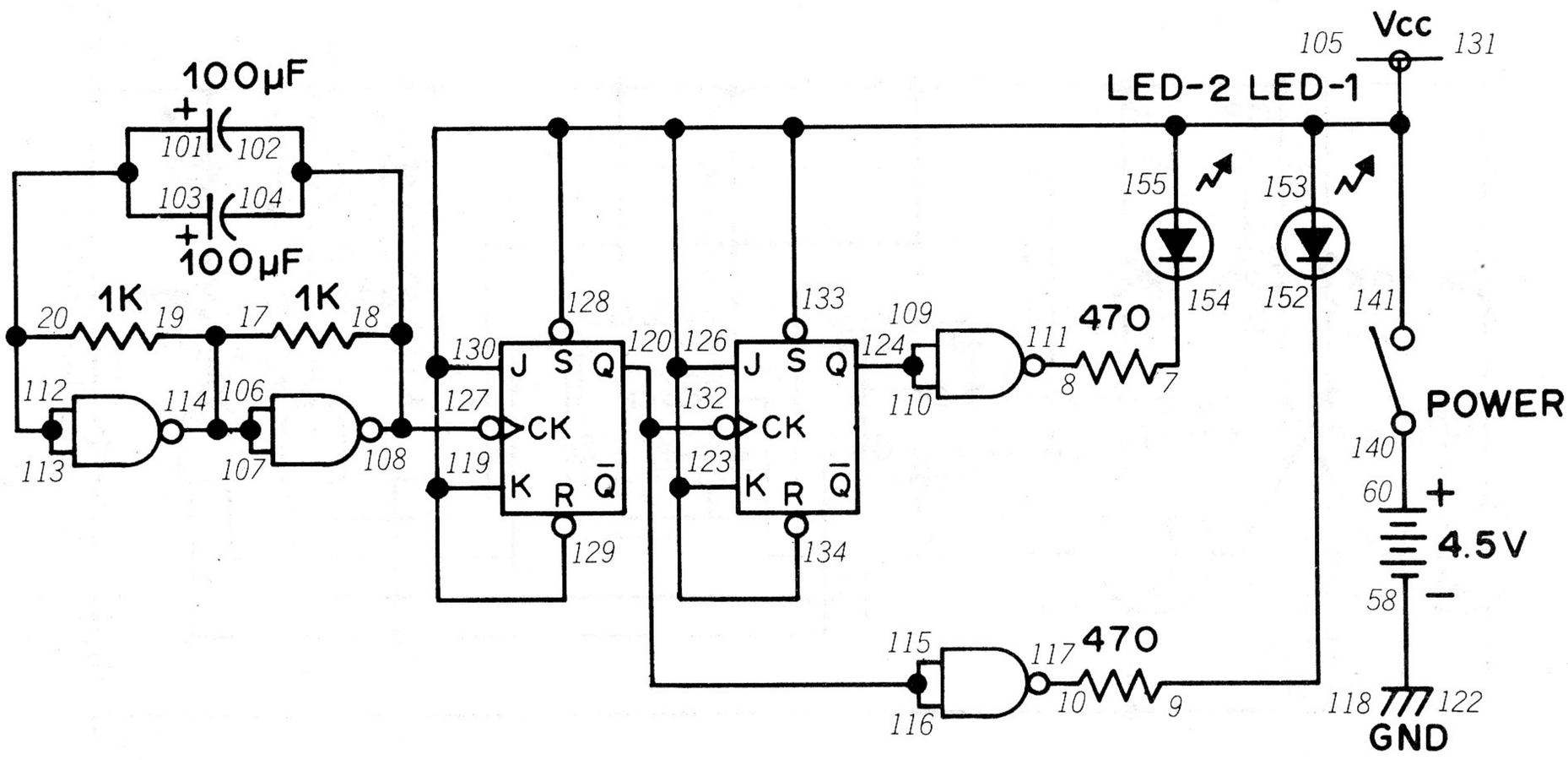

Here's a counter circuit that can count up to four. (*Gee, these Projects must be getting smarter as we go along!*) Like our previous counters, it uses flip-flops – but a special kind. Can you guess which?

As you can see in the schematic, this Project uses a NAND multivibrator to set up the pulses which are counted. When you turn the Control Knob to ON, both LEDs 1 and 2 will blink on and off. After some blinking, you'll begin to see a pattern develope. First LED 1 comes on, then LED 2, then both on, and then both off – 1, 2, 1 and 2, off ... both LED's will blink on and off in this sequence.

Did you guess which type of flip-flop we're using in this Project? It's a **toggle** flip-flop, which we first met back in Project 144. You can see from the schematic that the Q output of the first flip-flop serves as the clock input for the second flip-flop, meaning that this counter circuit is ...

Asynchronous, of course!

Back in Project 146 we saw how "master and slave" flip-flop arrangements worked. This is the same arrangement used in this Project. The first flip-flop controls the operation of the second. Try tracing the input of the multivibrator through the flip-flops to see how the LEDs are turned off and on!

NOTES

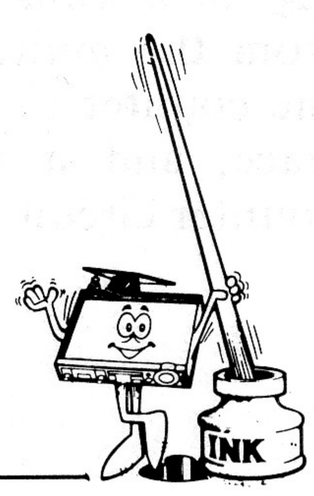

Wiring Sequence

7-154, 8-111, 9-152, 10-117, 18-102-104-127-108, 19-17-106-107-114, 20-103-101-112-113, 58-118-122, 60-140, 105-119-123-126-134-133-131-130-129-128-155-153-141, 110-109-124, 116-115-120-132.

157. DIVIDE BY 4 COUNTER WITH LINE DECODER

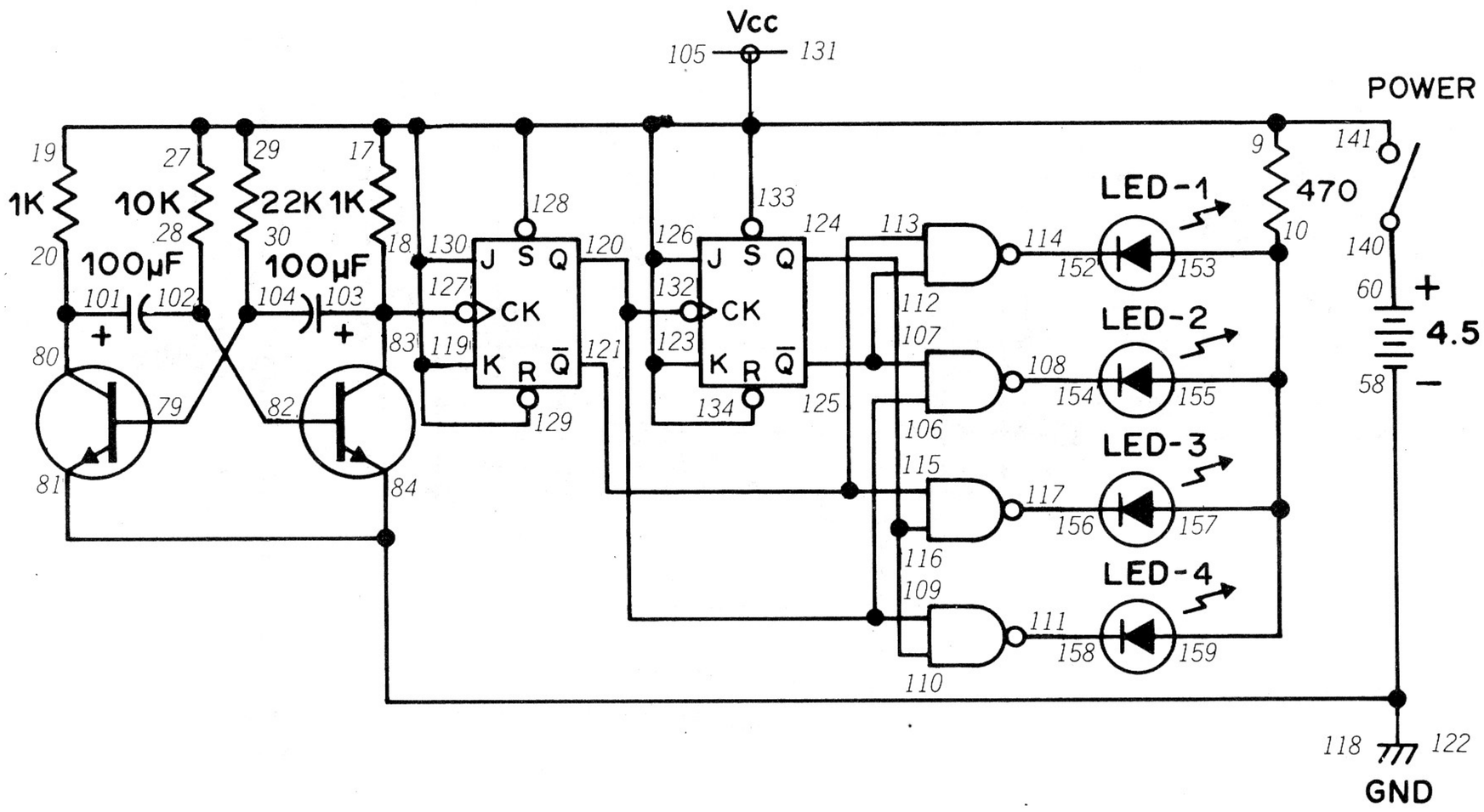

We can use the same line decoder arrangement that we used in Project 155 with a divide by 4 counter circuit. This Project will let you see how it's done.

You'll notice that a transistor multivibrator circuit is used in this Project. When you turn the Control Knob to ON, the four LEDs will light up one after another as the circuit counts each pulse from the multivibrator.

The counter is an asynchronous type and the Q and $\overline{Q}$ outputs of both are input into the line decoder arrangement. You'll notice that each output serves as one of the inputs for two different NANDs. And the Q output of the first flip-flop is also the clock input for the second flip-flop.

Ever wonder what would happen if you added another flip-flop to this circuit? The first flip-flop "divides" the input into two outputs (Q and $\overline{Q}$). The second flip-flop adds two more outputs. Do you think the third flip-flop would give you a total of six outputs? Guess again ... it would give you *eight* outputs! When flip-flops are connected in a "master and slave" arrangement, the outputs, aren't added together – they're **multiplied**. In a counter with two flip-flops, multiplying the outputs of both gives 2 x 2, or 4. With three outputs, the result of multiplying the outputs of all three is 2 x 2 x 2, or 8. If we were to connect four flip-flops together in a circuit like this, we would have 16 different outputs (you know why, don't you?).

And since the counter could have up to 8 or 16 different outputs, it could count up to 8 or 16. Today's large computers are able to count and handle large numbers using more complex versions of the circuit in the Project. (Of course, the counters in computers are synchronous so that all the flip-flops can "march in step!")

NOTES

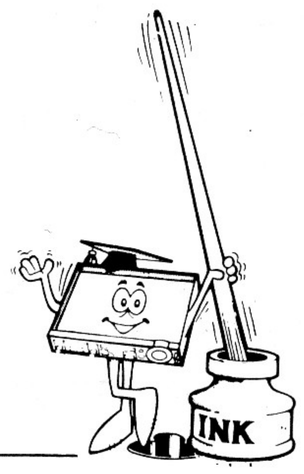

Wiring Sequence

10-153-155-157-159, 18-83-103-127, 20-80-101, 28-82-102, 29-27-17-19-9-141-128-129-130-131-133-134-126-123-119-105, 30-79-104, 58-118-122-84-81, 60-140, 107-112-125, 108-154, 109-106-120-132, 110-116-124, 111-158, 114-152, 115-113-121, 117-156.

158. HOW A LINE DECODER WORKS

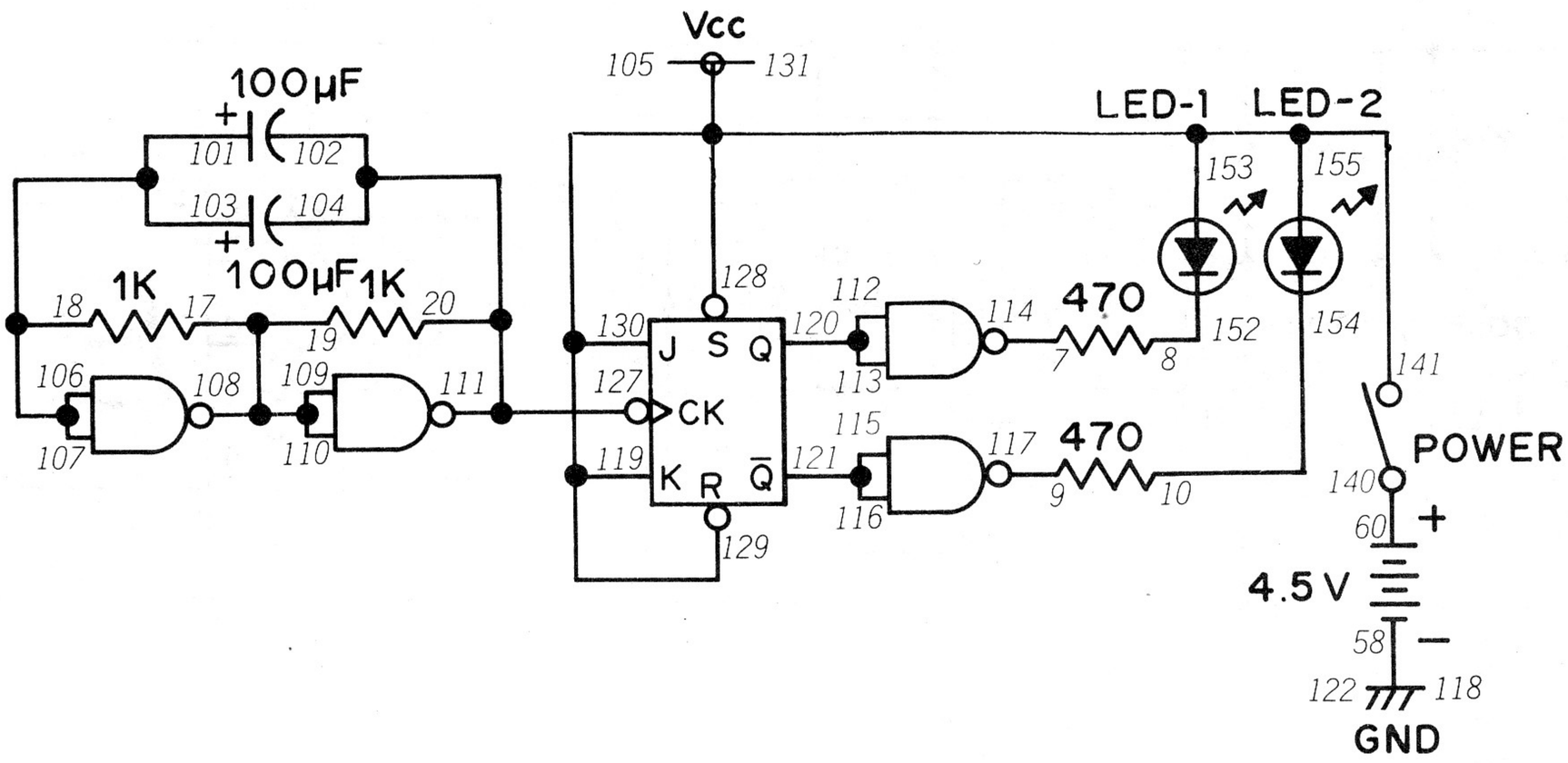

Line decoder can be a bit confusing when you're working with many flip-flops and their outputs. Let's back up a moment and take a look at a simpler counter and line decoder circuit.

In this Project we have a NAND multivibrator inputting a clock signal into a single flip-flop. You can easily guess what happens ... each time the clock signal is input, the flip-flop either sets or resets. Suppose that output Q is 1 while $\overline{Q}$ is 0. Both of these outputs go to NAND gates, where they're used for both inputs. Set the Control Knob clockwise to switch power ON. If Q is 1, the output of the NAND will be 0 – and LED 1 will light. $\overline{Q}$ is 0 at the same time, so the NAND it is connected to will have 1 for an output ... and LED 2 will go out. The next clock pulse from the multivibrator will cause this situation to reverse (or flip-flop!).

If you'll look back at the schematics for the counters with line decoder we've played with in previous Projects, you'll notice that each NAND gets one input from the first flip-flop and another input from the second flip-flop. These combined inputs turn the LEDs on or off as the two flip-flops set and reset.

Since NANDs are the only type of digital integreated circuit in your Kit, we use NANDS exclusively in counter Projects. But do you think that we could make counter circuits out of AND, OR, NOR or XOR gates? You might want to get some scratch paper and try to figure out how those digital circuits could combine the outputs of the flip-flop in this Project. Do you think NAND gates are the easiest way to make a line decoder? Can you come up with a simpler method?

NOTES

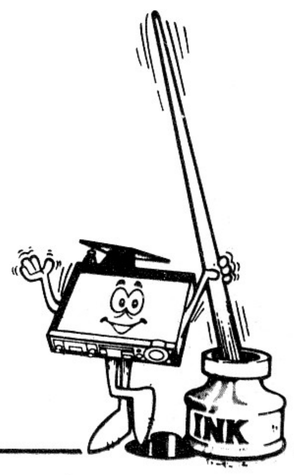

Wiring Sequence

7-114, 8-152, 9-117, 10-154, 17-19-108-109-110, 18-101-103-106-107, 20-102-104-127-111, 58-118-122, 60-140, 105-119-128-129-130-131-155-153-141, 112-113-120, 116-115-121.

159. MULTIPLE COUNTER

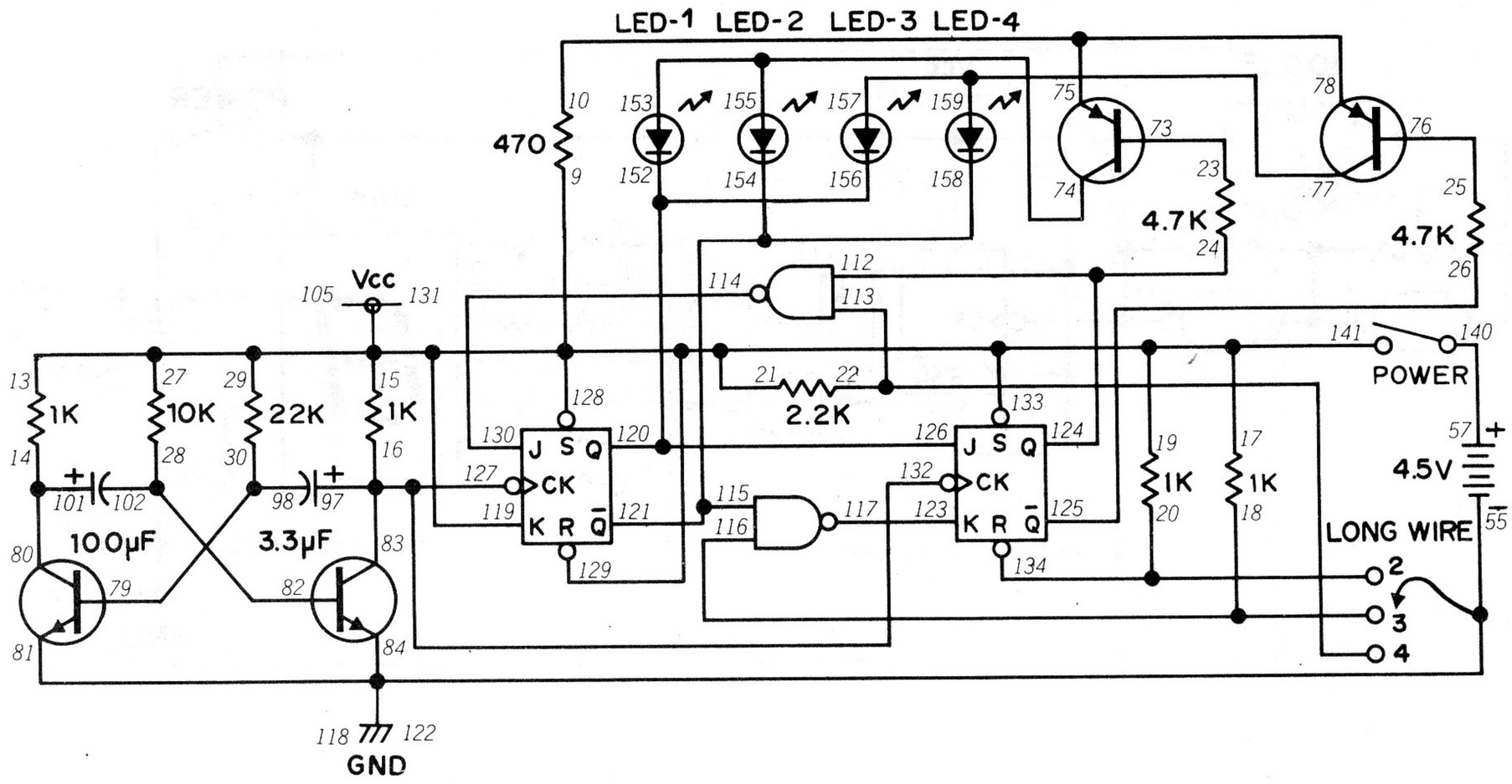

It's not very handy having a separate counter for counting by 2, 3, 4 or some other number. You might be wondering if there's some way to have a counter circuit capable of counting up to several different numbers. Yes, there is such a circuit – and we're going to build it right now.

You can see from the schematic that the pulses to be counted are generated by a multivibrator circuit. The counter itself is synchronous, since each flip-flop receives a clock signal directly from the multivibrator. Turn the Control Knob to ON and take the long wire from terminal 55. Now touch terminal 134 with the exposed end of the long wire. You'll see that LED 1 and LED 2 take turns lighting, indicating that this Project is functioning as a "divide by 2" (or binary) counter.

Next move the long wire from terminal 134 to terminal 116. Now you can see that LED 1, LED 2 and LED 3 will light up one after the other. This indicates that the circuit is now a divide by 3 counter. Finally, touch terminal 113 with the long wire and you'll see all four LEDs light in turn. This indicates the Project is now a divide by 4 counter.

This Project shows how counters can be made to cover a wide range of counting rates. More complex counters using this same basic circuit are very important pieces of electronic equipment.

NOTES

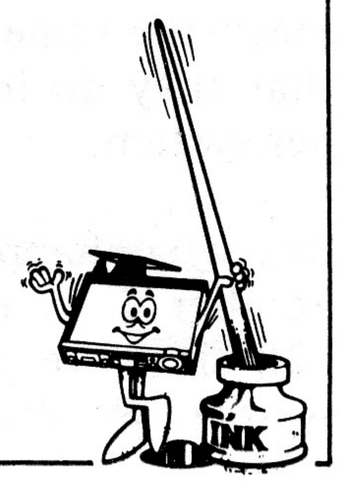

Wiring Sequence

9-19-17-15-13-21-27-29-141-128-129-131-133-119-105, 10-75-78, 14-80-101, 16-97-83-127-132, 18-116, 20-134, 22-113, 23-73, 24-112-124, 25-76, 26-125, 28-82-102, 30-79-98, 57-140, 74-153-155, 77-157-159, 81-84-122-118-55-LONG WIRE, 114-130, 115-121-158-154, 117-123, 126-120-156-152.

160. BINARY COUNTER WITH DISPLAY

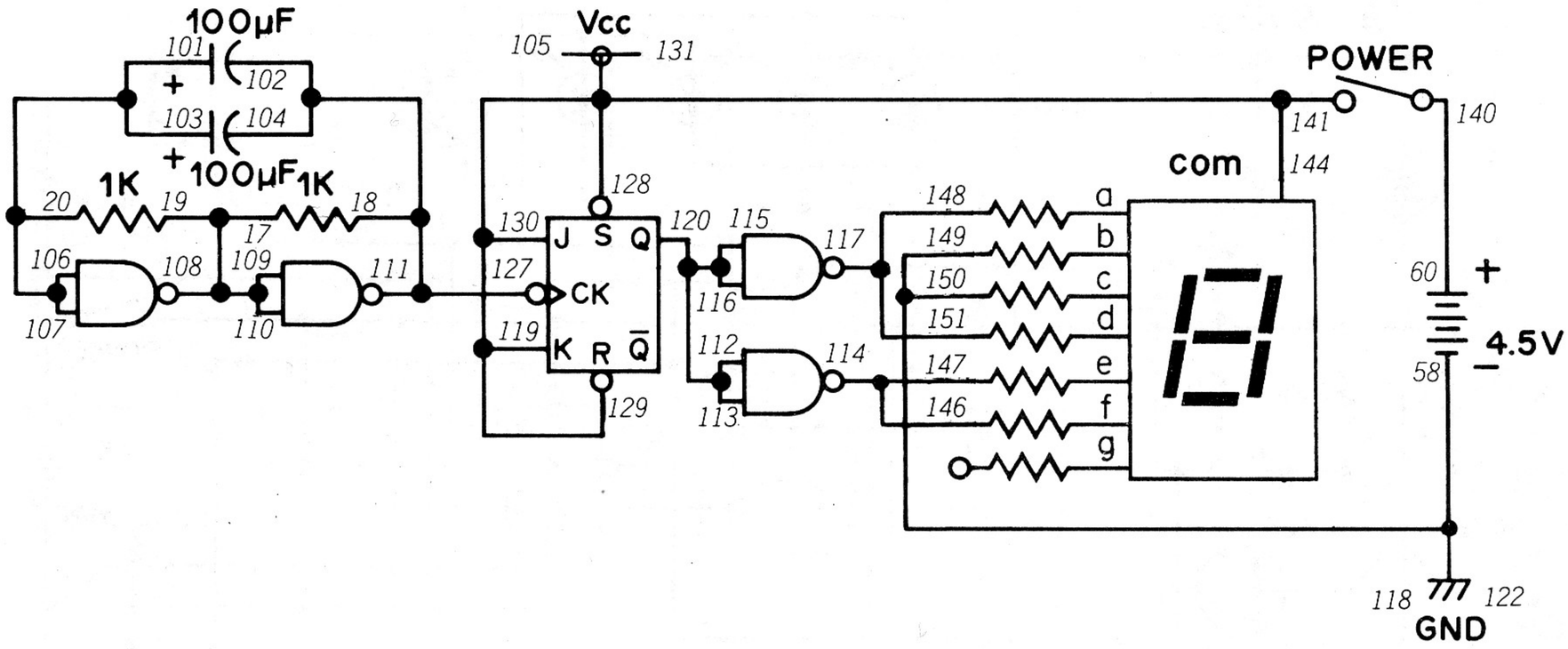

Counters aren't terribly exciting circuits when they just flash LEDs ... but add the Digital Display and it's a different story altogether. Here's a binary counter which will let you see it in action as it counts.

You will recognize this circuit as being very similar to the binary counter you built back in Project 152. The source of the pulses for the counter is a NAND multivibrator. The output of the multivibrator provides clock signals for the flip-flop. Note that the output of the flip-flop is taken from output Q and serves as the input for the two NAND gates. (So the two NAND gates aren't really part of a line decoder.)

Turn the Control Knob clockwise to switch power ON. You'll see 0 and 1 flash on and off the Display. Why 0 and 1 instead of 1 and 2? We called this circuit a binary counter ... and binary numbers are those made up *entirely* of 0s and 1s. 0 and 1 mean the same thing in the binary number system that they do in our normal (called *decimal*) number system.

But what happens when we want to express the number 2 in the binary system? We can't write "2" since we can only use 0 and 1 in the binary system. We do in this case what we do when we reach 9 in our decimal system ... we write "10!"

That's right, 10 in binary numbers is actually 2 in the decimal system. How do you suppose we write 3 in binary numbers? That's right ... it's "11."

Ask your math teacher for more information about the binary number system. Your library will also have some math books covering the subject. Computers add, subtract, multiply and divide numbers in binary form.

NOTES

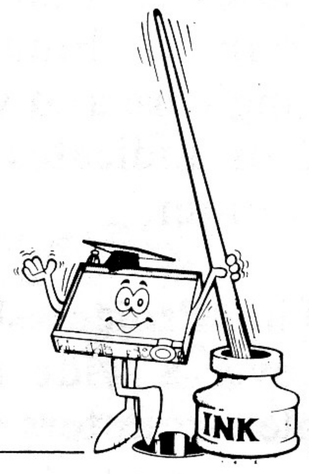

Wiring Sequence

18-102-104-127-111, 19-17-108-109-110, 20-101-103-106-107, 58-118-122-149-150, 60-140, 105-119-131-130-129-128-144-141, 114-146-147, 116-115-113-112-120, 117-148-151.

161. DIVIDE BY 3 COUNTER WITH DISPLAY

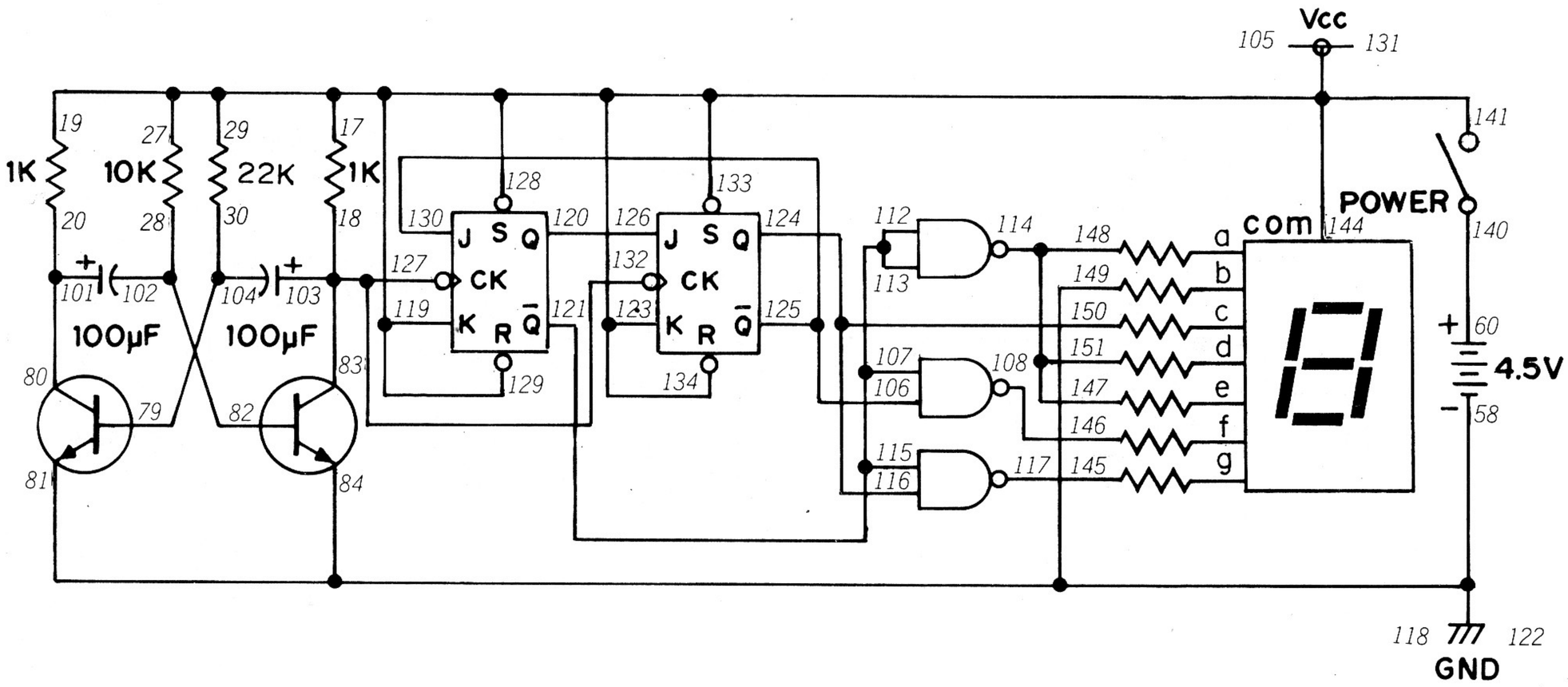

In Project 155, you built a divide by 3 counter with a line decoder. After our last Project, you might be wondering if we can add the Display to other counter circuits we've built. The answer is yes – as this Project will demonstrate.

This is basically the same circuit you built back in Project 155, but with some alterations to the line decoder to allow use of the Display. Compare the schematics for these and find out how and why the line decoder was changed.

This circuit uses a transistor multivibrator to supply pulses for the synchronous counter. The line decoder takes the outputs from the counter and combines them using the NAND gates to turn the various LED segments of the Display on and off. When you turn the Control Knob clockwise to ON, you can see 0, 1 and 2 displayed in a repeating pattern on the Display.

NOTES

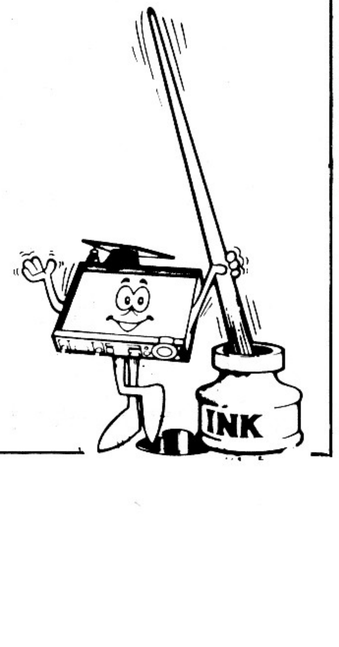

Wiring Sequence

18-83-103-127-132, 20-80-101, 28-82-102, 29-27-17-19-141-144-128-129-131-133-134-123-119-105, 30-79-104, 58-118-122-84-81-149, 60-140, 106-125-130, 108-146, 114-148-151-147, 115-107-113-112-121, 116-124-150, 117-145, 120-126.

162. DIVIDE BY 4 COUNTER WITH DISPLAY

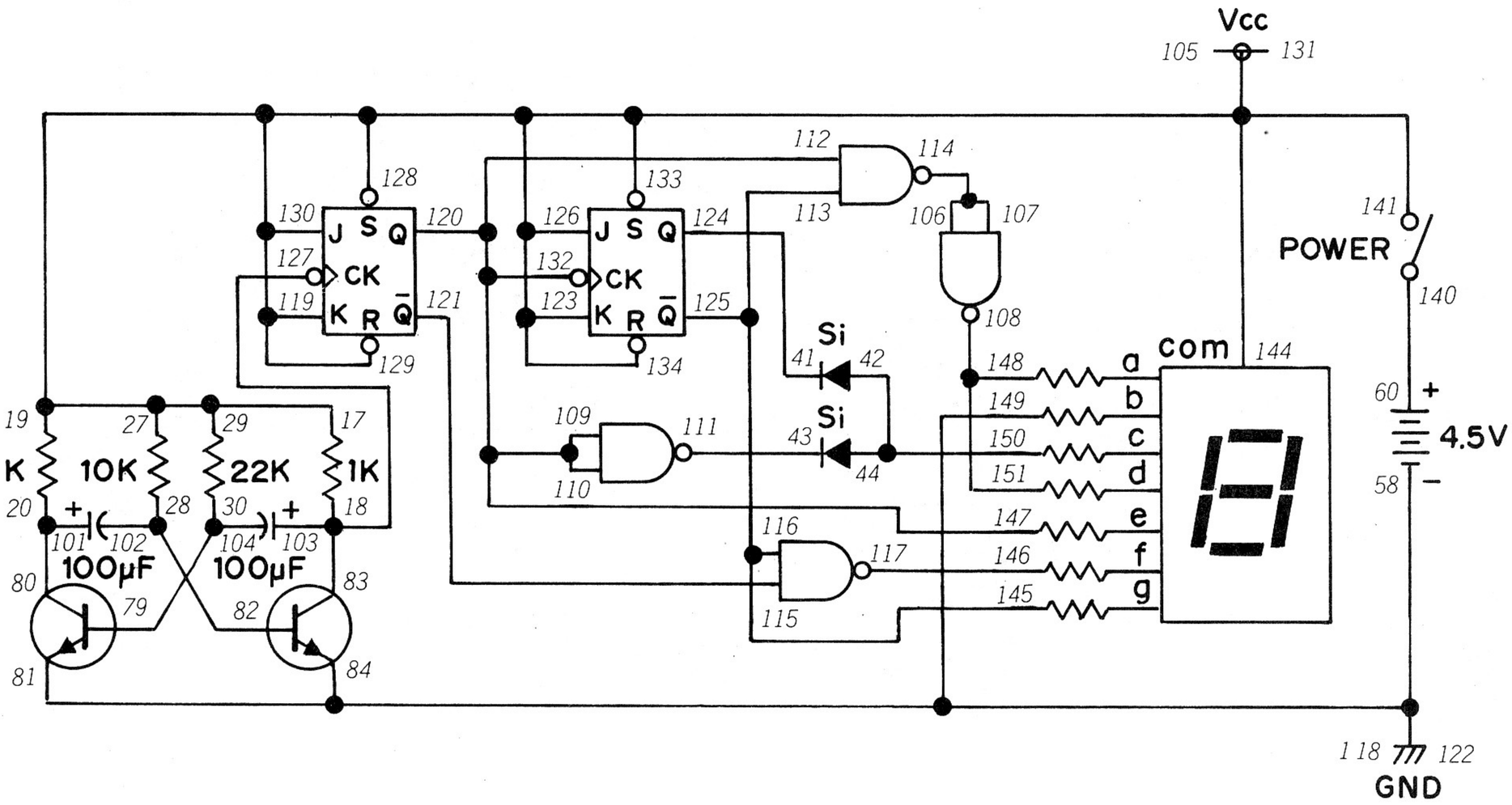

Here's the divide by 4 counter you built back in Project 157 with the Display added. You can easily see the similarities by comparing the schematics for the two Projects. As in the last Project, most changes are in the line decoder to allow use of the Display.

As in other counters you've played around with, the pulses for the counter are generated by a transistor multivibrator. The counter circuit is an asynchronous type, since the Q output of the first flip-flop provides the clock signal for the second flip-flop. You can also see that two Diodes have been added to the decoder circuit – can you guess why? If your memory is a bit rusty when it comes to diodes, take a look back at Projects 40, 41, and 42!

When you turn the Control Knob to ON, you'll see 0, 1, 2 and 3 light up on the Display as the counter keeps track of the pulses from the multivibrator.

We've used multivibrators with these counter circuits simply because they're a handy source of pulses. You could just as easily do away with the multivibrator part of this circuit altogether and uses the Key to generate the pulses to be counted! Try it yourself – let your hand do the work instead of the multivibrator. (*After all, we've been using that circuit so much it deserves a vacation!*)

You can also make connections to the Display so that the counter will indicate other numbers, small letters or capital letters as it counts the pulses. Can you figure out how to do this? Check back at those notes you made for Projects 53, 54 and 55 – We told you those notes would come in handy for you.

NOTES

When you first turn on the power the counter may not start with 0 and then 1, 2 and 3. Don't let that bother you. Most counters that you'll come across in electronic circuitry will be "reset" to start with and as a result will always start at 0. (By the way, the 'R' terminal on the 7476 IC is for 'Reset' or 'Clear' – which is used to reset the count to zero or clear the count.)

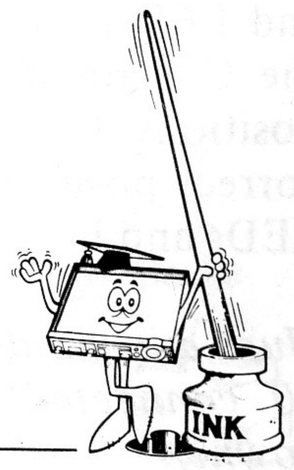

Wiring Sequence

18-83-103-127, 20-80-101, 28-82-102, 29-27-17-19-141-144-128-129-130-131-133-134-126-123-119-105, 30-79-104, 41-124, 42-44-150, 43-111, 58-118-122-84-81-149, 60-140, 106-107-114, 108-148-151, 110-109-112-120-132-147, 115-121, 117-146, 125-116-113-145.

163. LIGHT OR SOUND

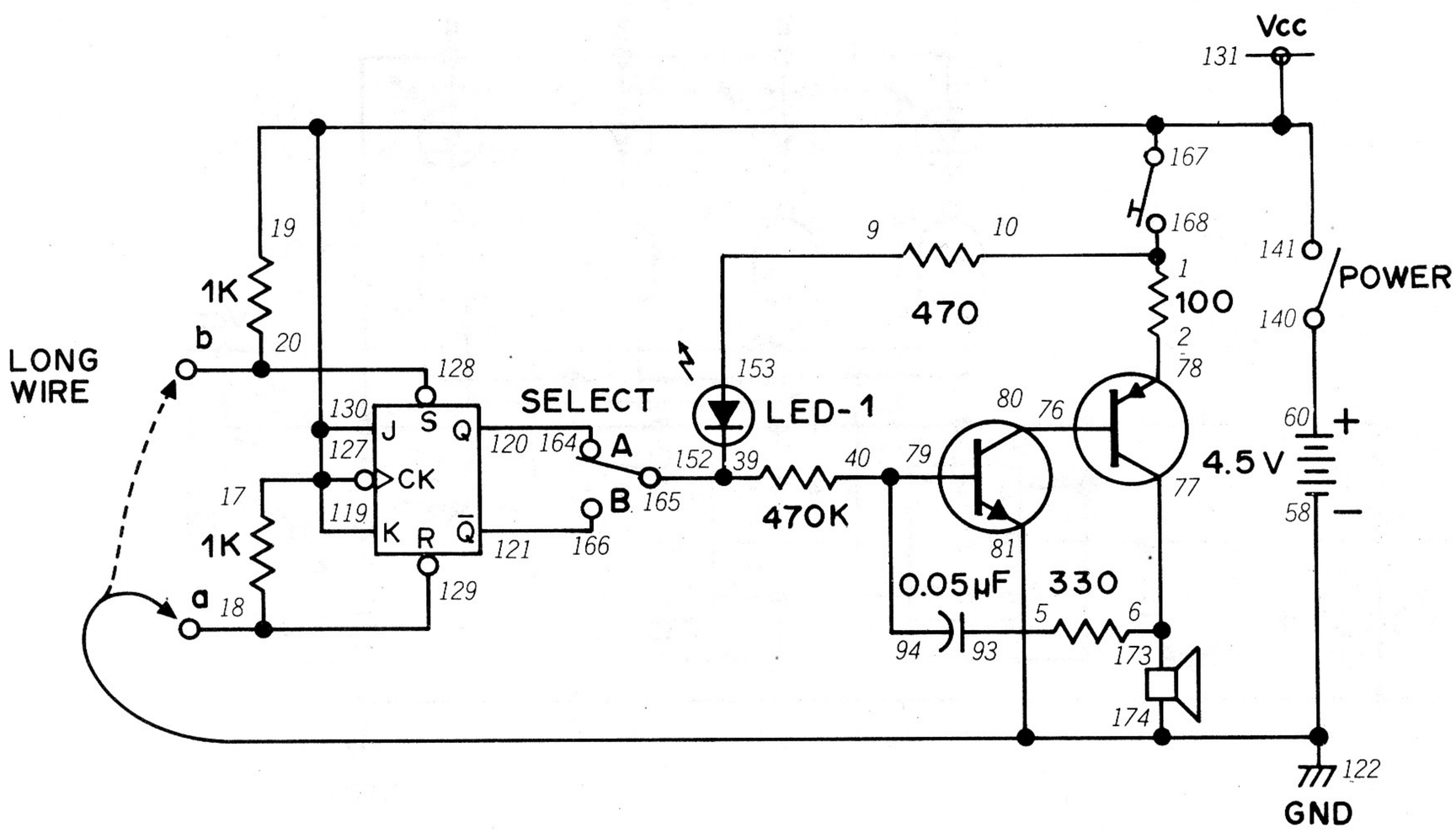

Flip-flop circuits can be used in game circuits since there's no way to tell if the flip-flop circuit is set or reset just by looking at it. Trying to outwit a flip-flop circuit can be frustrating ... as this Project will demonstrate.

You can see how this circuit works by looking at the schematic. You set or reset the flip-flop using the long wire from terminal 81. The Q and $\overline{Q}$ outputs are selected by the Select Switch. Depending on whether the two outputs are 0 or 1, either LED 1 will light or the audio oscillator will sound when the Key is pressed.

To play with this circuit, set the Select Switch to either A or B as you build it, When you finish, turn the Control Knob to ON. Take the long wire from terminal 81 and touch either terminal 128 or 129. Now set the Select Switch to either A or B. Press the Key – what happens?

You either got a sound from the Speaker or LED 1 lit. Continue to hold the Key down and touch the other terminal with the long wire (for example, if you touched terminal 128 first, now touch terminal 129). You'll see the opposite now happen – if the LED is lit, it will go out and you'll hear a sound from the Speaker.

This shouldn't too much of a surprise to you ... as you can see on the schematic, terminal 128 is the set input and terminal 129 is the reset input. You can use this Project as a game by touching terminal 128 or 129 with the long wire and then trying to figure out whether the LED will light or a sound will come from the Speaker. What are the combinations of Q and $\overline{Q}$ levels (0 or 1) and Select Switch positions to let each happen?

NOTES

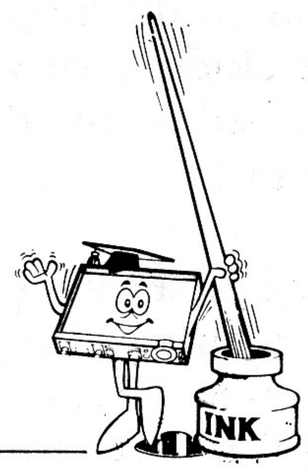

Wiring Sequence

1-10-168, 2-78, 5-93, 6-77-173, 9-153, 17-19-141-167-127-130-131-119,18-129, 20-128, 39-152-165, 40-79-94, 58-122-174-81-LONG WIRE, 60-140, 76-80, 120-164, 121-166.

164. BE YOUR OWN MULTIVIBRATOR

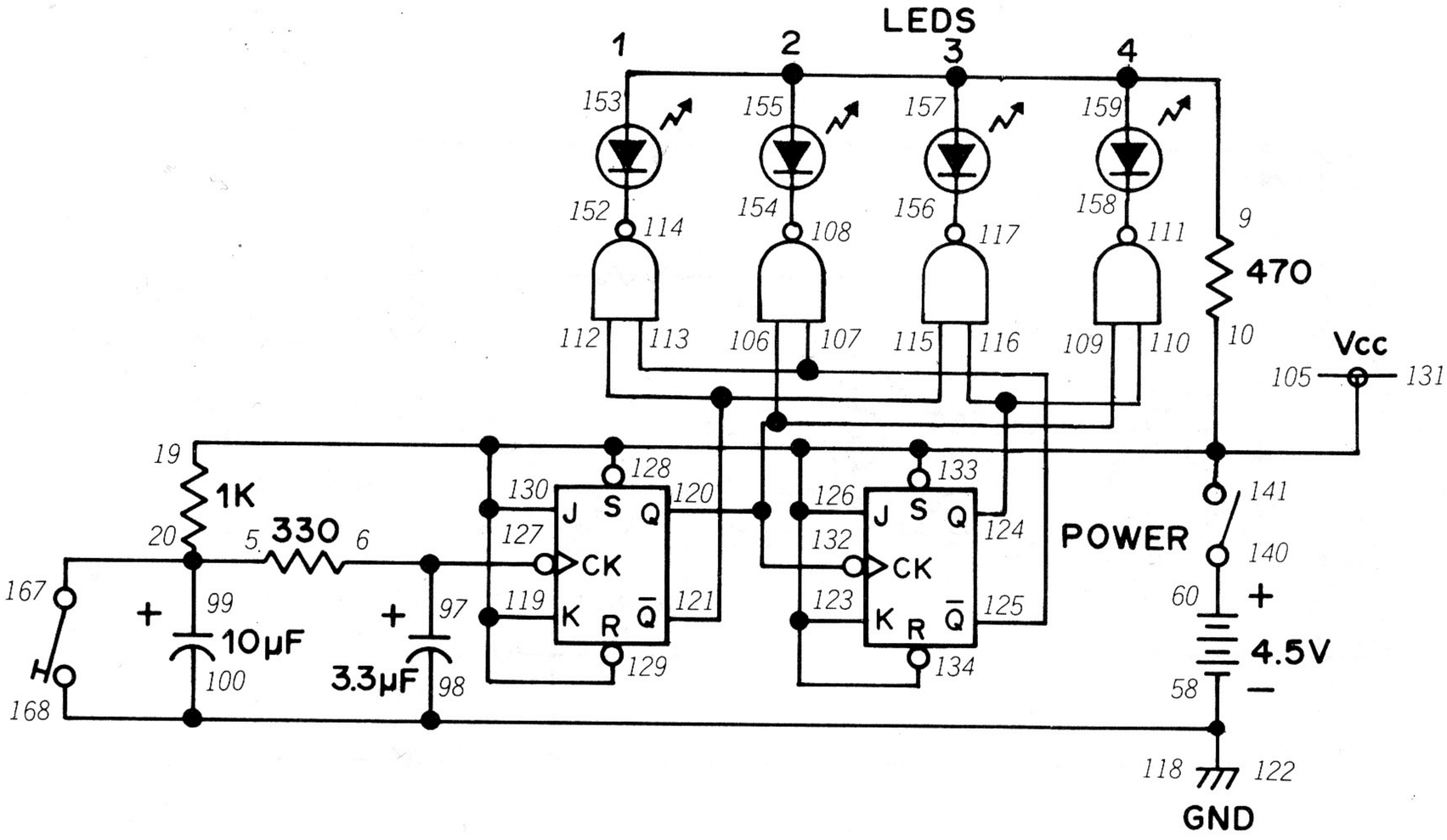

Notice anything familiar about the schematic for this Project? If you get the feeling that you've seen this circuit before, you're right. Take a look back at the schematic for Project 157 – you'll see that it's the same counter and line decoder circuit without the multivibrator. This Project lets you be your own multivibrator.

As you can see from the schematic, each time you press the Key you send a clock signal to the first flip-flop. The counter circuit is asynchronous since the Q output of the first flip-flop provides the clock signal for the second flip-flop.

Turn the Control Knob to ON and press the Key a few times. You'll see LEDs 1 through 4 light up in order and then go off. This cycle will be repeated a few times depending on how many times you press the Key.

Of course, there's several ways to vary this circuit. You could supply the set or reset signal instead of the clock ... or you could let the multivibrator supply some of the inputs while you supply the others.

Back in Project 162 we told you that you could substitute a Key for a multivibrator circuit in a counter. If you tried to do it, did your results look anything like this circuit?

NOTES

1. When pressing the Key, don't do it too quickly (fast pressing may result in what we call switch 'bounce'–which means very, very fast un-intentional switch action).
2. Be sure you're using fresh batteries (or you may end up with some strange results).

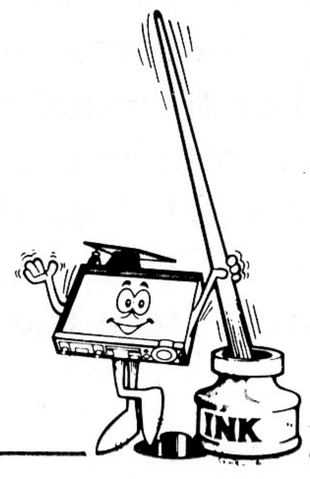

Wiring Sequence

5-20-99-167, 6-97-127, 9-153-155-157-159, 10-19-141-128-129-130-131-133-134-126-123-119-105, 58-118-122-98-100-168, 60-140, 107-113-125, 108-154, 109-106-120-132, 110-116-124, 111-158, 112-115-121, 114-152, 117-156.

165. ANTICIPATION

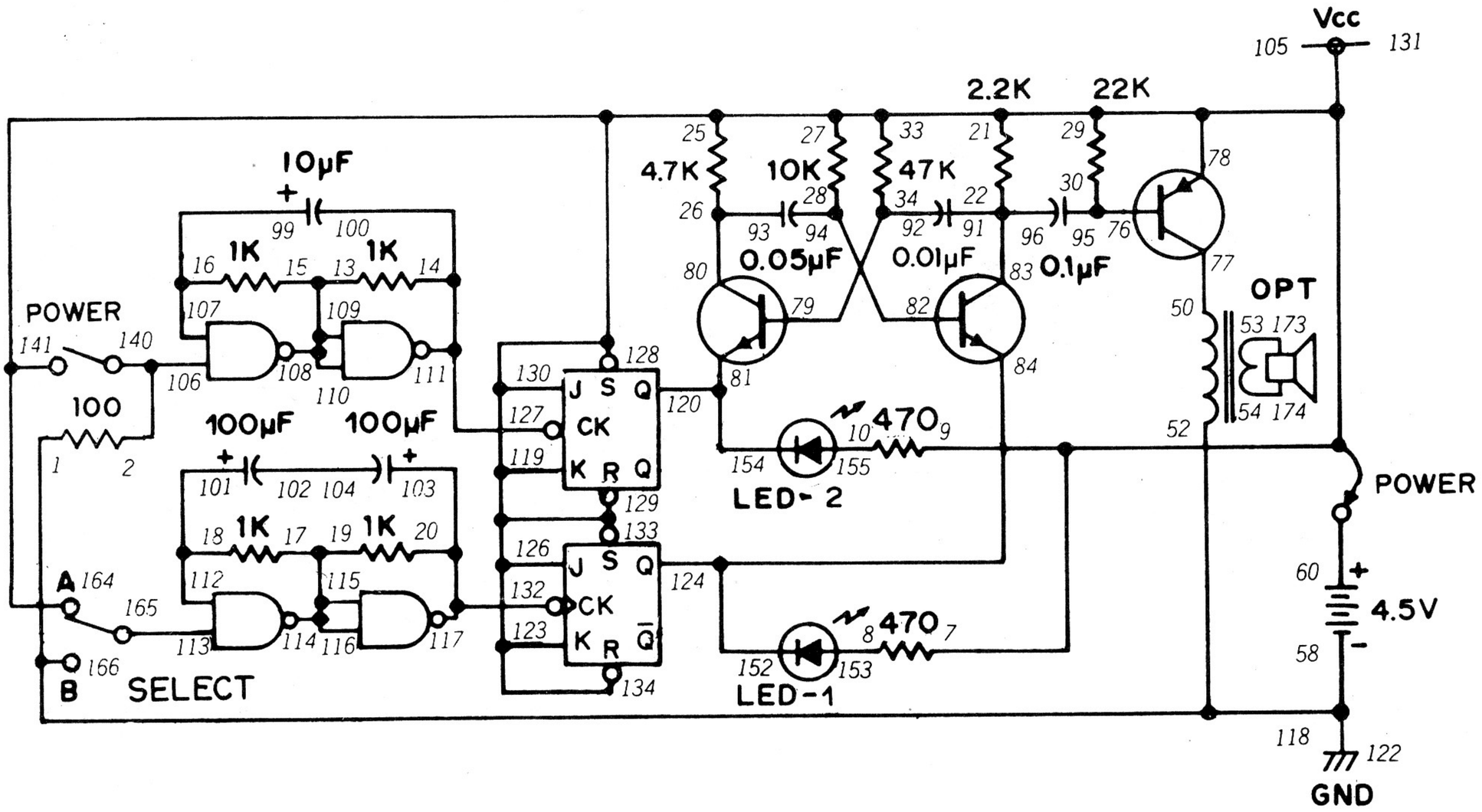

Think you have a good sense of timing? If you're not sure, here's a Project that will let you quickly find out.

A quick glance at the schematic shows this Project uses both a J-K flip-flop and an astable multivibrator. The astable multivibrator will produce a sound from the Speaker and you'll also notice LEDs 1 and 2 light up at different rates. Both the Power and Select Switches are used here to control the inputs to the J-K flip-flop circuits. Your job is to select that combination of switch settings that will let both LEDs light and also produce a sound from the speaker.

As you wire this Project, you'll notice that we have no "switch" to turn the circuit on or off. To turn this Project on, just make a connection between terminals 105 and 60. Now set the Select Switch to A to generate pulses for the J-K flip-flop. You'll now hear sounds from the Speaker and LED 1 and 2 will flicker. Now try setting both the Control Knob and Select Switch to different positions. If you manage to set the switches to the correct positions *at the right time* you'll light both LEDs and hear a sound from the Speaker.

(Just a reminder – don't leave terminals 105 and 60 connected – the Batteries will quickly run down!)

NOTES

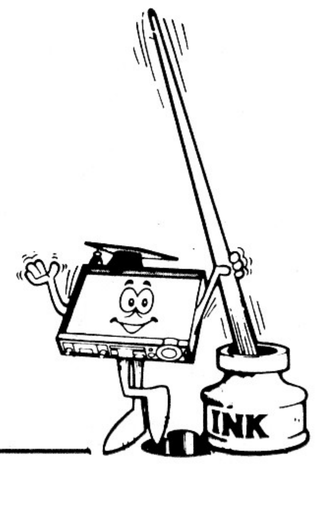

Wiring Sequence

1-52-58-118-122-166, 8-153, 10-155, 13-15-108-109-110, 14-100-127-111, 16-99-107, 17-19-114-115-116, 18-101-112, 20-103-132-117, 22-91-96-83, 26-80-93, 28-94-82, 30-76-95, 34-79-92, 50-77, 53-173, 54-174, 78-33-29-27-25-21-7-9-141-164-128-129-130-131-133-134-126-123-119-105, 102-104, 106-2-140, 113-165, 120-81-154, 124-84-152, 105-60 (POWER).

166. BIG MOUTH!

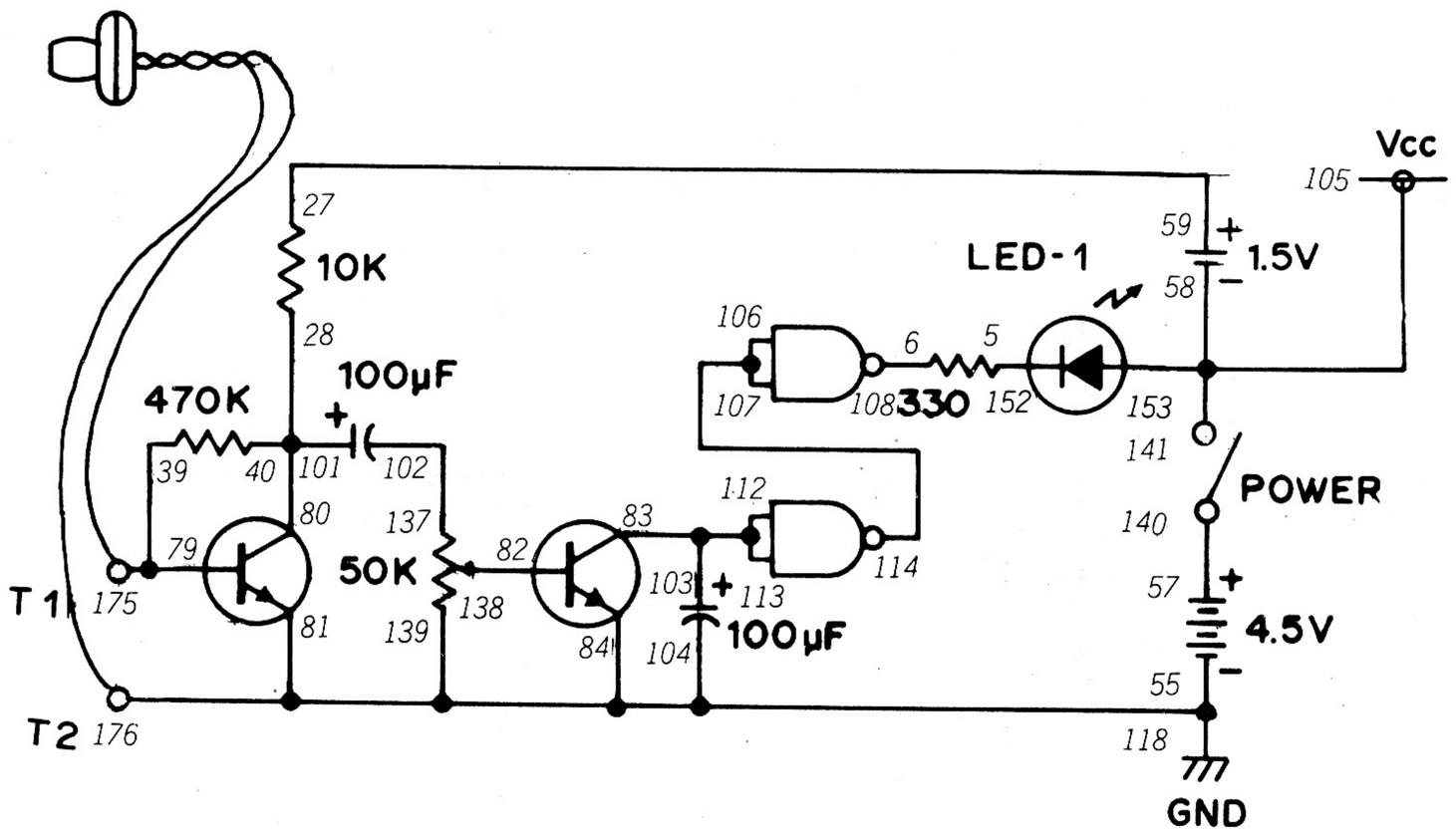

Know someone's who's a big mouth? (Or have you been accused of being one?) This Project will let you and your friends see who's got the loudest voice.

You can see how this Project works by looking at the schematic. When you yell into the Earphone, your voice creates electrical energy by ... *(c'mon, you remember!)* ...

Piezoelectricity! See Project 71 if you don't remember!

The electrical energy from the Earphone is amplified by the two-transistor circuit. You'll notice that the Control lets you control how much of the signal from the Earphone is amplified. Next come two NAND gates in series. They control whether or not LED 1 lights. (Just to keep in practice, trace how the 0's and 1's change from input to output.)

To play this game, turn the Control Knob to ON and set the Control to the middle of its range. Yell into the Earphone and watch LED 1. It will probably light. Try turning the Control counter-clockwise to make it more difficult to light . LED 1. (Try adjusting it just a tiny bit each time.) See how far you can reduce the gain of the amplifier and still light the LED.

NOTES

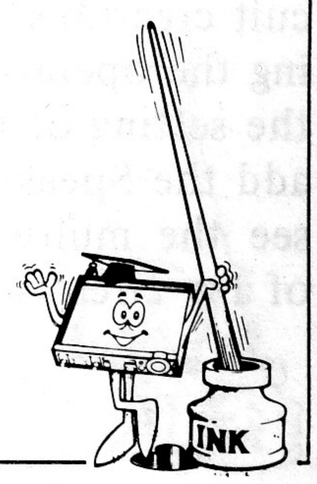

Wiring Sequence

5-152, 6-108, 27-59, 28-40-80-101, 39-79-175, 55-118-176-104-84-81-139, 57-140, 58-105-153-141, 82-138, 103-83-112-113, 102-137, 106-107-114, T1-EARPHONE-T2.

167. SOUND STOP

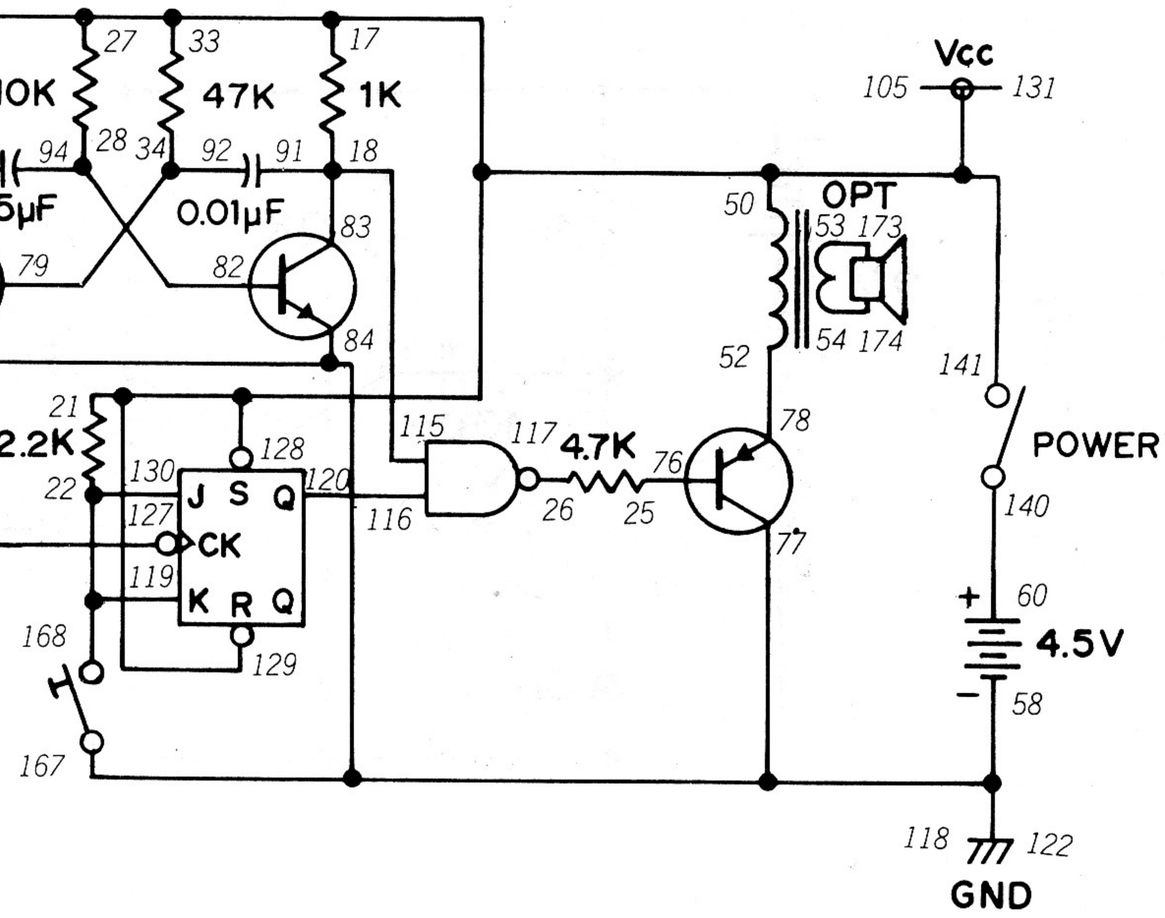

Here's another circuit that will let you see how well you can anticipate whether a digital circuit will be 0 or 1. If you guess right, you can turn off the sound from the Speaker.

You'll notice that this Project uses two multivibrators. The transistor multivibrator produces the pulses you hear from the Speaker. It is turned off and on by the pulses from the NAND gate multivibrator. The J-K flip-flop plays an important part in the circuit ... can you guess why? (*Try reviewing your notes.*) You change the output of the J-K flip-flop by pressing the Key. If the output at Q is 1, the sound will not stop. If the output is 0, the sound stops.

To play this game, turn the Control Knob to ON and you'll hear a sound from the Speaker. Press the Key. Does the sound stop? If not, try pressing the Key again and again until you finally manage to turn off the sound.

After you play the game a few times, you might suspect that there is some sort of pattern to pressing the Key at the right moment to stop the sound. Keep careful notes of when you press the Key and what happens – try using a clock or watch with a second hand to make your notes as accurate as possible. Is there really a pattern?

NOTES

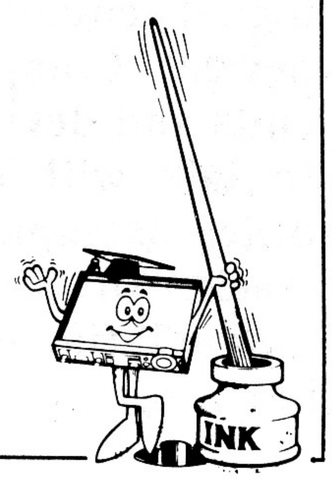

Wiring Sequence

14-100-127-108, 15-13-106-107-114, 16-99-112-113, 18-91-83-115, 20-93-80, 22-119-130-168, 25-76, 26-117, 28-94-82, 34-79-92, 50-33-21-27-17-19-141-128-129-131-105, 52-78, 53-173, 54-174, 58-118-122-167-84-81-77, 60-140, 116-120.

168. MULTIVIBRATOR SWITCHER

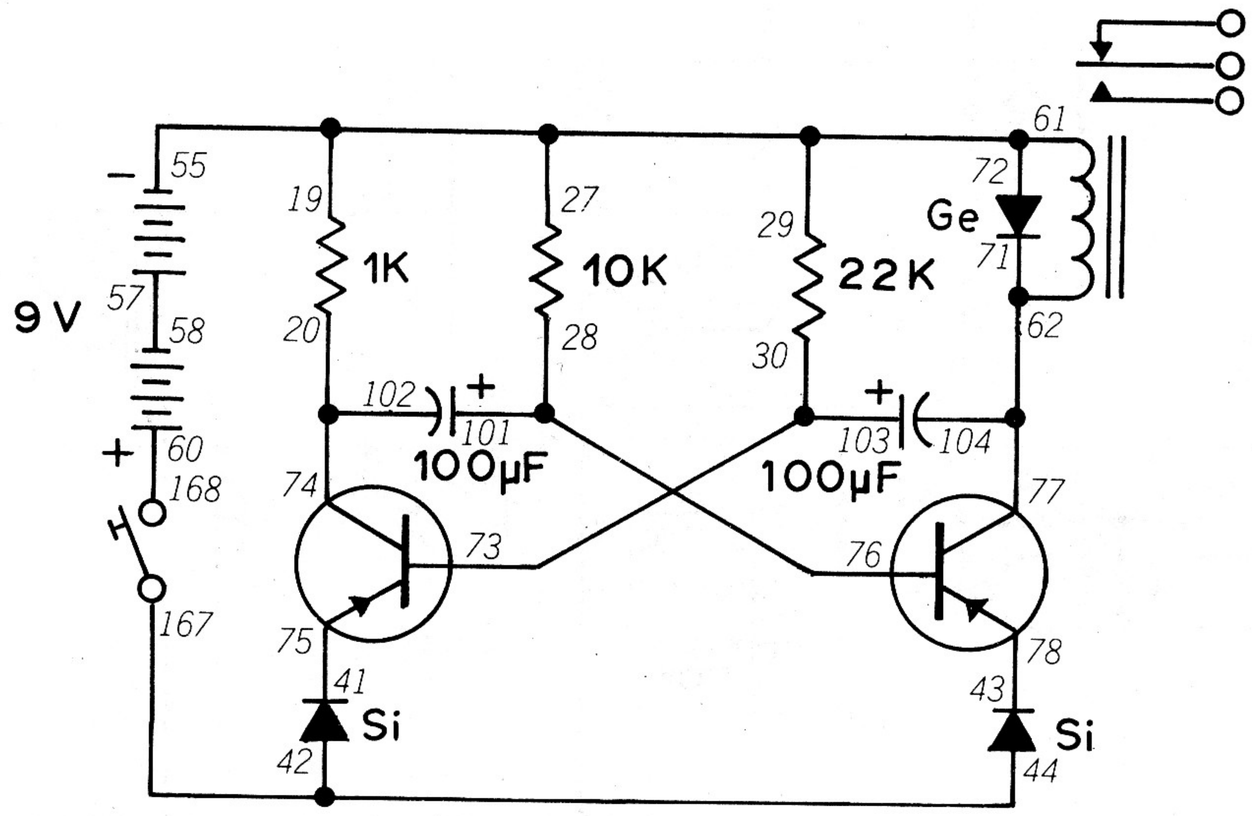

Do you know what *interfacing* means? Make a note of what you think ... this Project will give you some clues.

Unlike most of our earlier multivibrator circuits, this one doesn't connect to a LED or another digital circuit ... this one operates the Relay. After you finish the wiring connections, press the Key. Listen carefully and you'll hear the Relay switch ON and OFF as the multivibrator generates pulses. Since the Relay is a type of switch, you can control other devices by connecting them to the Relay.

You might notice that there is a good bit of time between pulses. Try substituting different values for the 22K resistor and 100µF capacitor.

Oh yes – *interfacing!* Interfacing is how digital circuits work together with the outside world. This is a very simple Project, but it does show a digital circuit can be used to control various devices. Computers are big users of interface circuits and devices – that's how we humans are able to talk with computers. Can you think of some other examples of interface circuits? (Ask your teacher or librarian for some books on computers – you'll find examples of many interfacing devices in them.)

NOTES

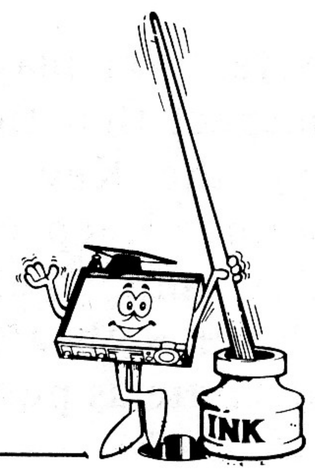

Wiring Sequence

20-74-102, 28-76-101, 30-73-103, 41-75, 42-44-167, 43-78, 55-61-29-27-19-72, 57-58, 60-168, 71-77-62-104.

169. WINKING LEDS

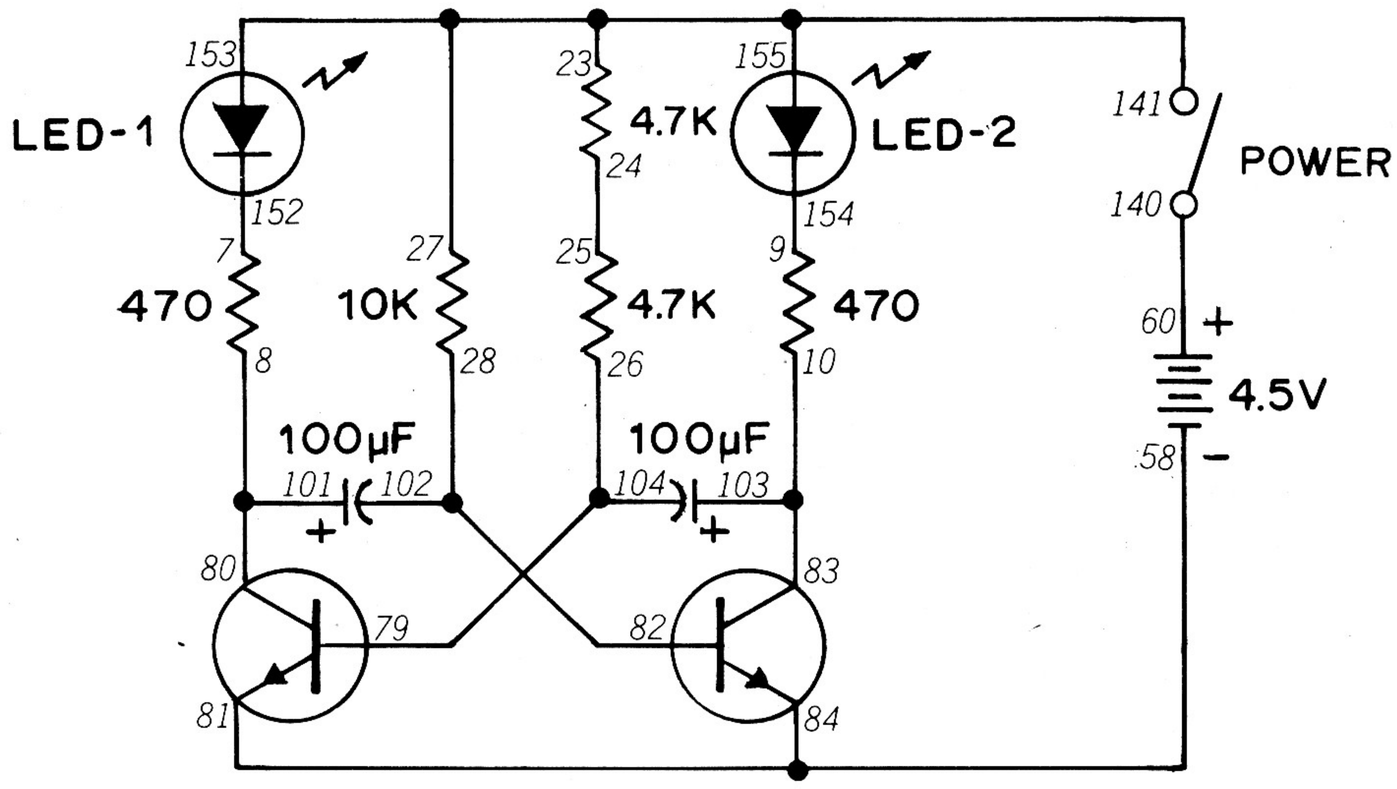

If you have been making up some of your own circuits, chances are you've come up with something similar to this Project. Multivibrators and LEDs seem to naturally go together.

The schematic will let you see how this Project works. Do you think that the two LEDs will light up and go off together or will they take turns lighting? Try to figure out what will happen before you build the circuit. (And, if you need some help, look back at the notes you made for other multivibrator circuits ...)

You can vary the speed of the pulses from the multivibrator by using different values for the 100 μF capacitors and the 10K resistor. You should be able to predict what will happen as you change values by reviewing the notes you've been keeping.

You can use this Project in many of your own circuit creations. Try adding some method of changing the operation of the multivibrator by changing the setting of the Control. You might also want to add the Speaker in some way so you can hear and see the multivibrator operating. Keep schematics of any circuits you create ...

One final thing — what kind of multivibrator circuit is this Project? (Try to answer without peeking at your notes or this Manual.)

It's an astable multivibrator.

NOTES

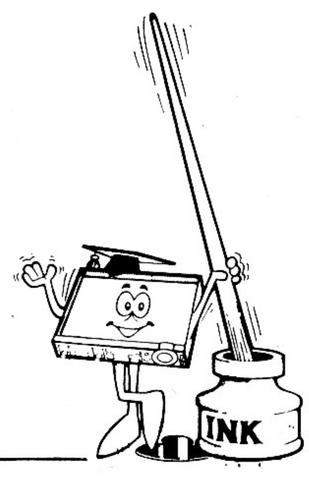

Wiring Sequence

7-152, 8-80-101, 9-154, 10-83-103, 23-27-141-153-155, 24-25, 26-79-104, 28-82-102, 58-84-81, 60-140

170. A PHONY COUNTER?

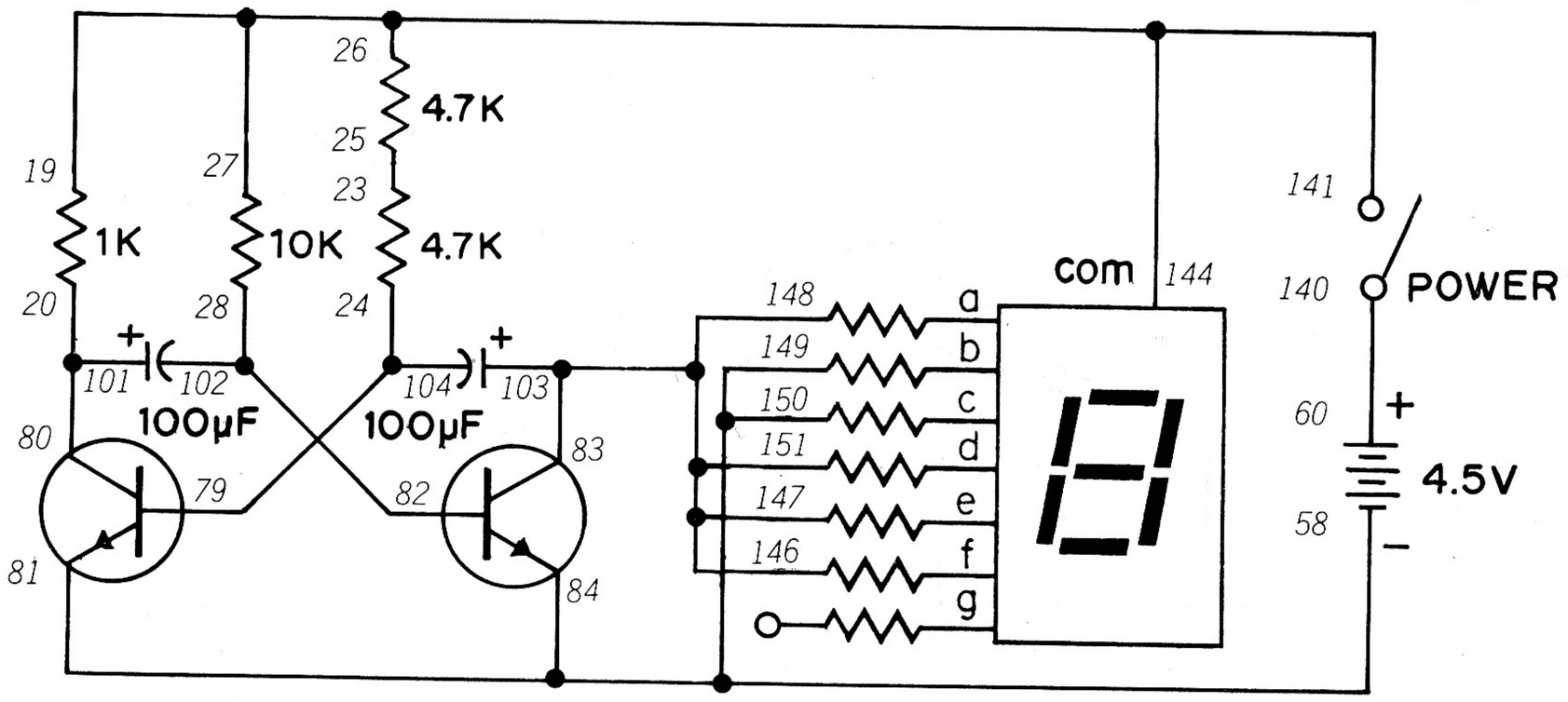

Did you try adding the Digital Display to our last Project in place of the two LEDs? If you didn't, here's a chance to make a multivibrator circuit imitate a counter.

Turn the Control Knob to the right to switch power ON when you finish the wiring. You'll see the numbers 0 and 1 appear in turn on the Display. You'll notice that two of the segments on the Display stay lit all the time. Four other segments light up and go off according to the output of the multivibrator.

This Project produces an effect similar to Project 160. But are both Projects the same? Think about it a minute (you might want to compare schematics for them) and then check your answer below.

They're not the same. Project 160 is a digital circuit that actually counts. This Project does not count the pulses from the multivibrator – the circuit only switches the Display back and forth each time the multivibrator changes states. It may look like it's counting, but it's not.

Before going on to the next Project, see if you can produce some different indications on the Display. Keep notes of what you managed to come up with – because you'll soon see how to produce different indications.

NOTES

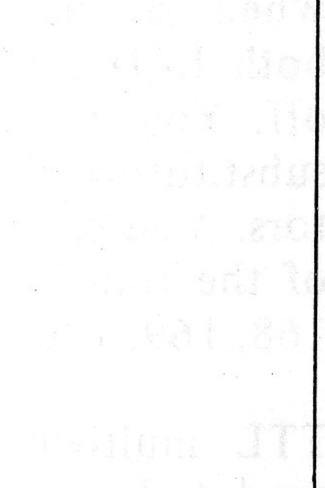

Wiring Sequence

20-80-101, 23-25, 24-79-104, 26-27-19-144-141, 28-82-102, 58-84-81-149-150, 60-140, 83-103-148-151-147-146.

171. ALPHABET FLASHER

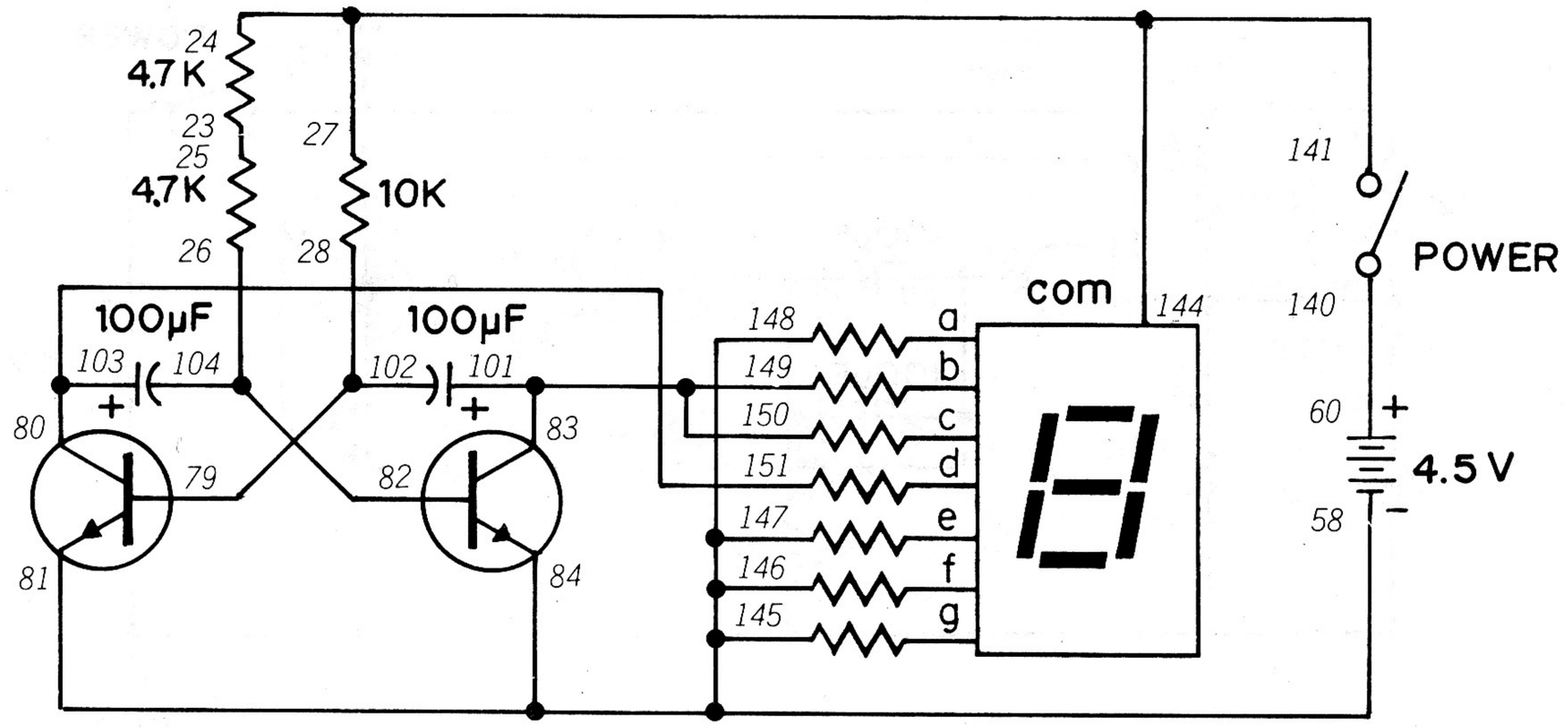

Did you figure ways to make the Digital Display in our last Project indicate something other than 0 or 1? This circuit will flash the capital letters A and E at you.

This circuit is the same astable multivibrator used in our last Project. By altering the connections to the Display, A and E are flashed over and over instead of 0 and 1. But A and E aren't the only letters that you can show on the Display – C, F, H, J, L, P and U can also be displayed! (*But we're not going to tell you how – figure it out yourself and enter it in your notebook.*)

You can dream up some other interesting circuits the multivibrator by altering the values of ... c'mon, by now we don't have to tell you which parts to change! (*We're right, aren't we?*)

You can dream up some other interesting circuits using a multivibrator on your own. Take a look back at some of our Projects using line decoders (such as Project 140) and see if you can discover a way to light two or more LEDs at different times using a multivibrator.

NOTES

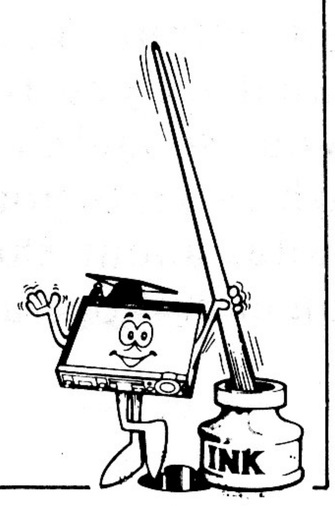

Wiring Sequence

23-25, 24-27-144-141, 26-82-104, 28-79-102, 58-84-81-148-145-146-147, 60-140, 80-103-151, 83-101-149-150.

172. A ONE-SHOT TTL

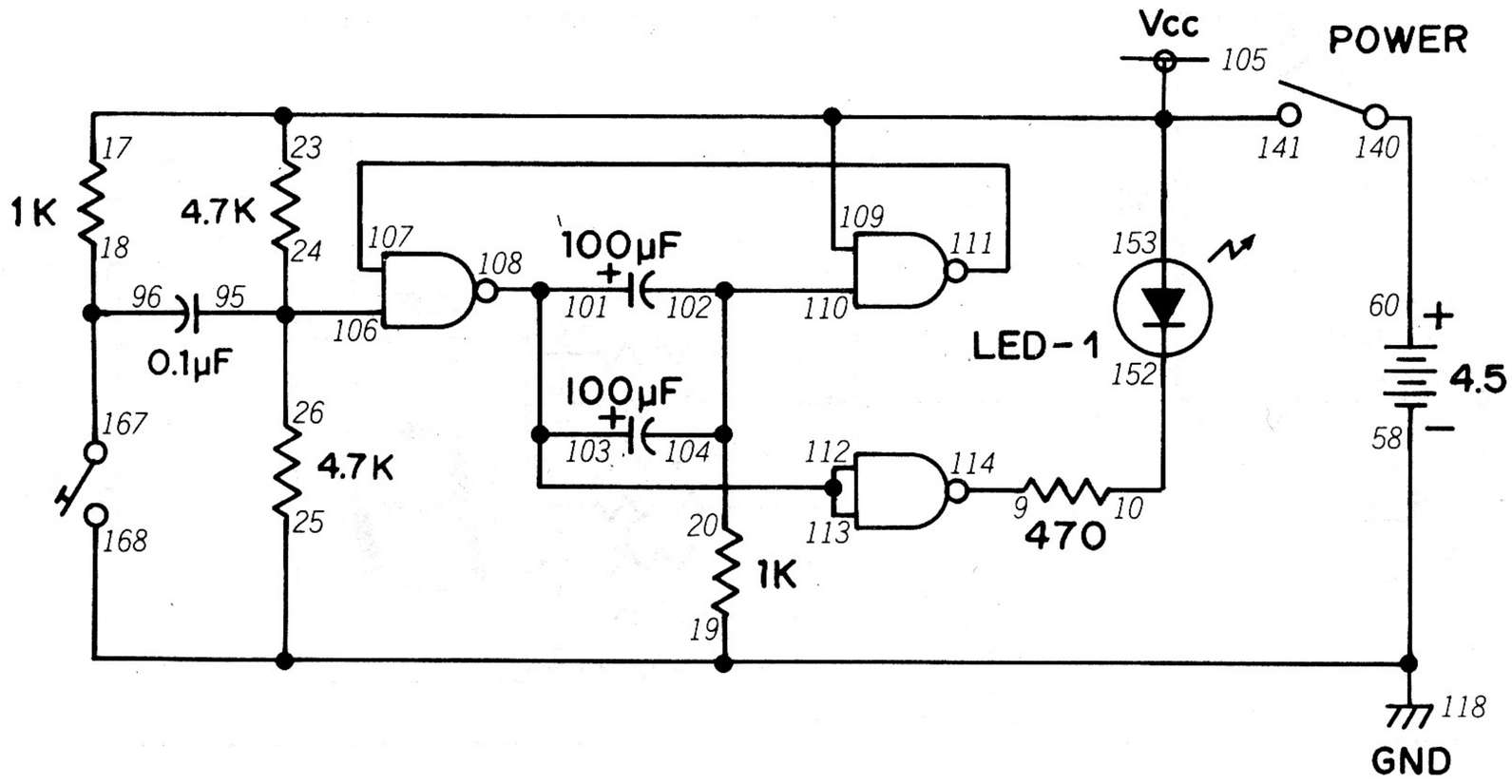

Does the term "one-shot" mean anything to you? (*No, it's not a nickname for some cowboy ... or a gun that holds just one bullet!*) If you're stumped, take a look back at Project 69.

When you finish the wiring connections, turn the Control Knob clockwise to ON. Press the Key once and watch what happens to LED 1. Try holding the Key down for different periods of time ... does LED 1 stay on the same length of time or does it vary?

You see that a one-shot multivibrator will have an output for a certain length of time regardless of the length of the input (it "fires one shot"!). This means that it can be used in many circuits as a timer. You might also see this circuit called a *monostable* multivibrator.

Since this is a multivibrator, you might suspect that there's some way to vary the time it produces an output. You're right – there is a way – and we'll let you try to discover what it is. (Actually, you shouldn't have much trouble discovering which parts you need to change. Be sure to make notes about the effect of higher and lower values on circuit operation.)

NOTES

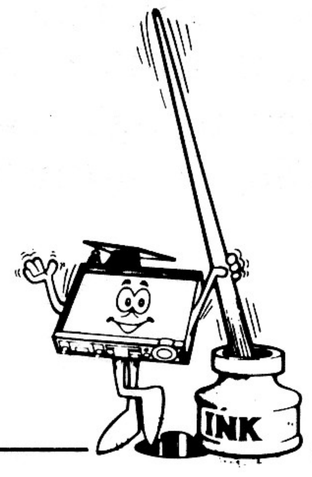

Wiring Sequence

9-114, 10-152, 17-23-141-153-105-109, 18-96-167, 19-25-58-118-168, 20-102-104-110, 24-26-95-106, 60-140, 107-111, 103-101-112-113-108.

173. WINKING LEDS II

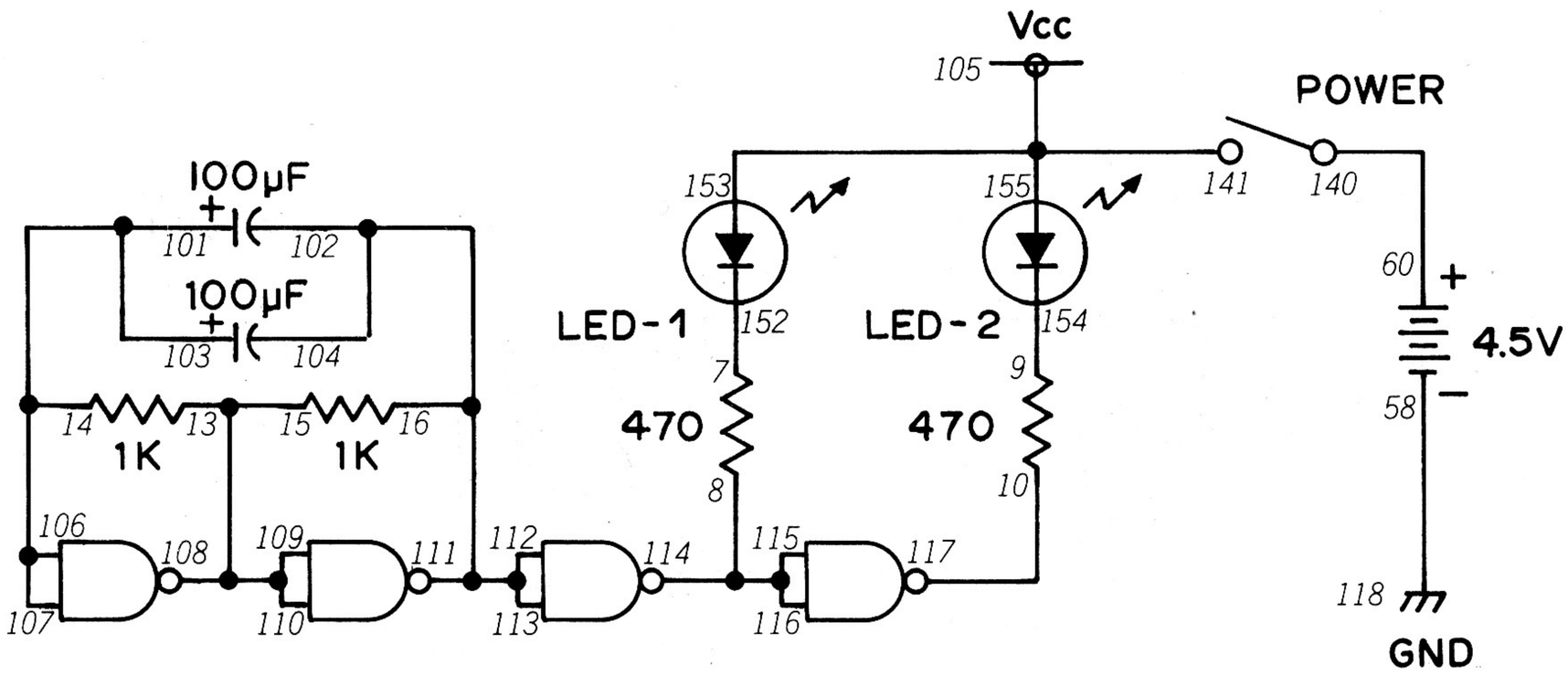

Here's a circuit similar to the one you built back in Project 169, but this time the multivibrator circuit is made using the TTL IC in your Kit. If you're a little bit rusty about how TTL multivibrators work, look back at Project 147 and the notes you made for it.

When you turn the Control Knob to ON, you'll see both LED 1 and LED 2 take turns going on and off. You can change the speed of the pulses by substituting different values for the 100 µF capacitors. You can use this TTL multivibrator in place of the transistor multivibrator in such Projects as 168, 169, 170 and 171.

TTL multivibrators are becoming more widely used today in place of transistor multivibrators. Can you think of some reasons why? Think about it for a minute and then turn this Manual upside down.

TTL multivibrators take up much less space than transistor multivibrators. TTL ICs also use less current than similar transistor arrangements.

NOTES

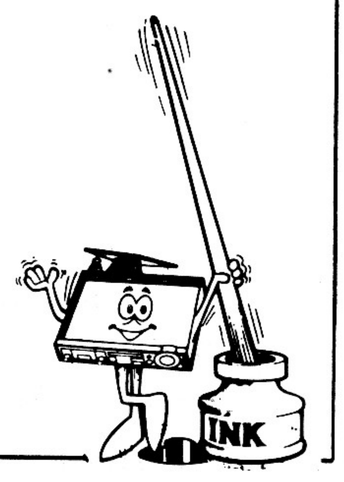

Wiring Sequence

7-152, 8-114-115-116, 9-154, 10-117, 13-15-108-109-110, 14-101-103-106-107, 16-102-104-112-113-111, 58-118, 60-140, 105-155-153-141.

174. TRANSISTOR TIMER

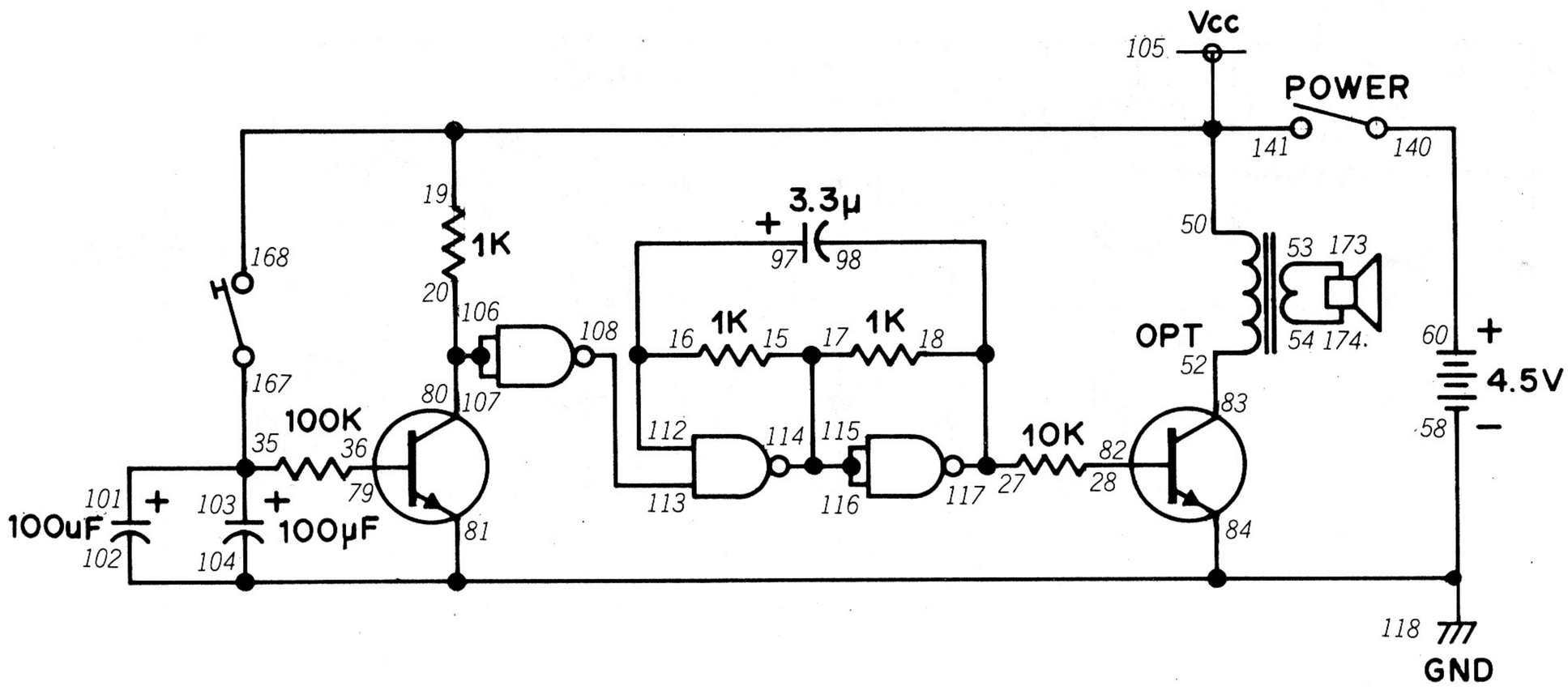

Here's another type of "one shot" circuit, but this time you hear the results.

You can see from the schematic that this Project uses a combination of digital and analog electronics. (Forgot what *analog* means? Check back to Project 106.) When you press the Key, the two 100 µF Capacitors are changed and lets the Transistor in the left corner of the schematic operate. You can see that the collector of this Transistor serves as both inputs for the first NAND gate.

The digital portion of this circuit controls the operation of the Transistor in the right corner of the schematic. Set the Control Knob to the right to switch power ON. When the output of the digital portion is 1, the Transistor has current applied to its base and operates ... and you hear a sound from the Speaker. When the two 100 µF capacitors discharge, the first Transistor can no longer operate. The output of the digital section becomes 0, and the second Transistor can no longer operate.

After you've experimented with this Project a bit, try this: press the Key and then release it. When the sound stops, find the wire running between terminals 108 and 113. Disconnect the wire from terminal 108 – does anything happen? If something does happen, can you explain why it did?

NOTES

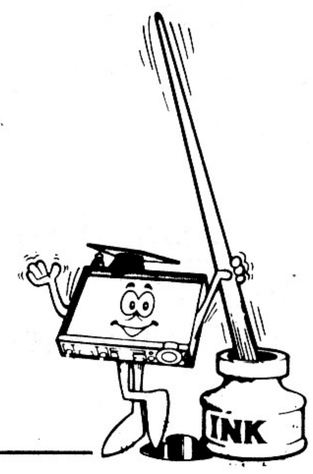

Wiring Sequence

15-17-114-115-116, 16-97-112, 18-27-98-117, 19-141-168-105-50, 20-80-106-107, 28-82, 35-101-103-167, 36-79, 52-83, 53-173, 54-174, 60-140, 104-102-81-84-58-118, 108-113.

175. TTL TONE GENERATOR

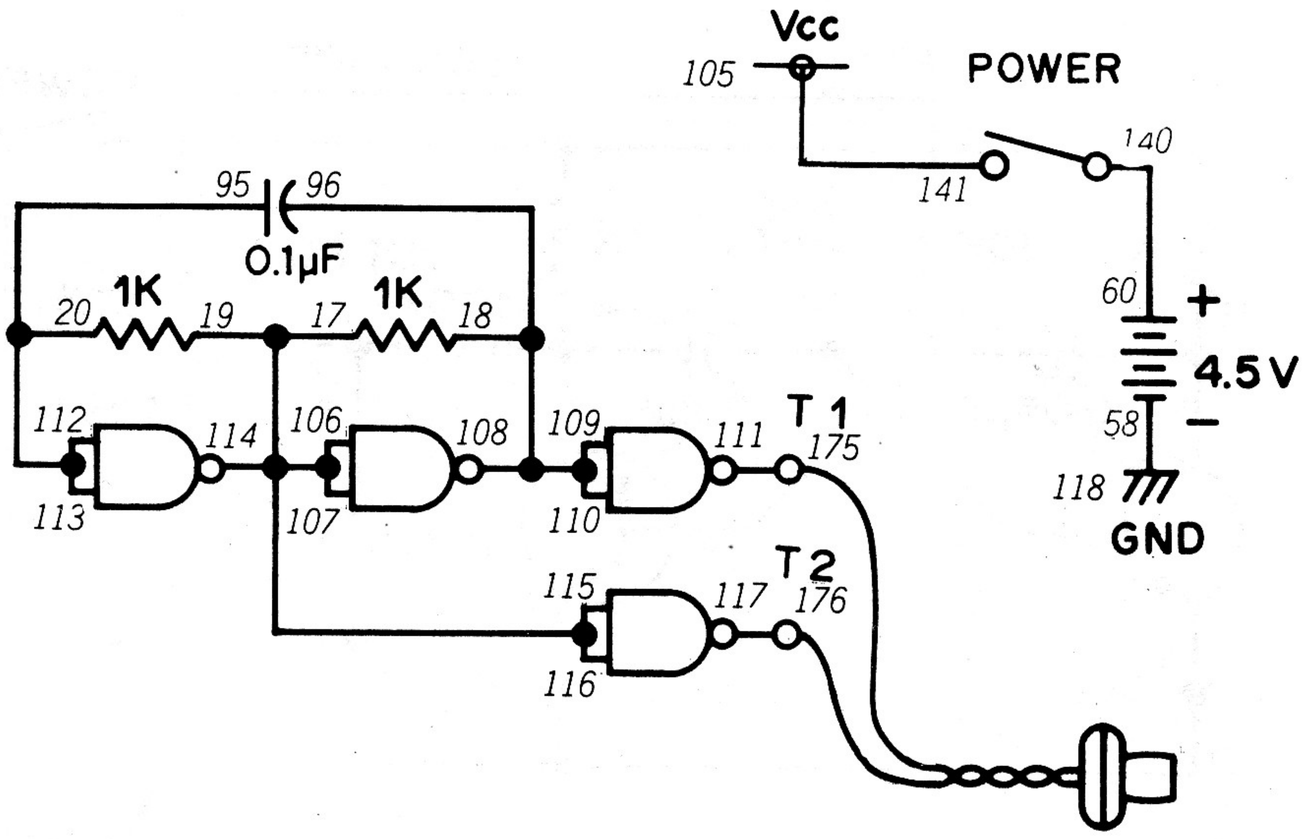

We've been producing tones with audio oscillators for so long that it might seem as if there's no other way to produce tones from electronic circuits. Not so – a multivibrator made from NAND gates will do the job nicely.

When you finish the wiring, connect the Earphone to Terminals 1 and 2 on your Kit and set the Control Knob to ON. You'll hear a tone produced by the multivibrator. Try changing the value of the capacitors from 0.1 μF to 0.5 μF. What effect does this have on the sound you hear?

Try some sort of arrangement so you can switch different value capacitors in and out of this circuit to vary the tone. You might also want to try different capacitors in this Project (don't try using any of the electrolytic capacitors, however). Can you think of any way to use this circuit with any other digital circuits?

NOTES

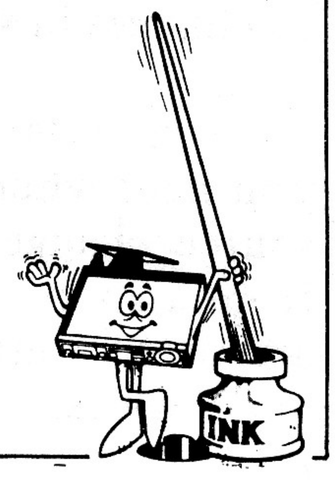

Wiring Sequence

17-19-106-107-114-115-116, 18-96-108-109-110, 20-95-112-113, 58-118, 60-140, 105-141, 111-175, 117-176, T1-EARPHONE-T2.

176. MEET THE VCO

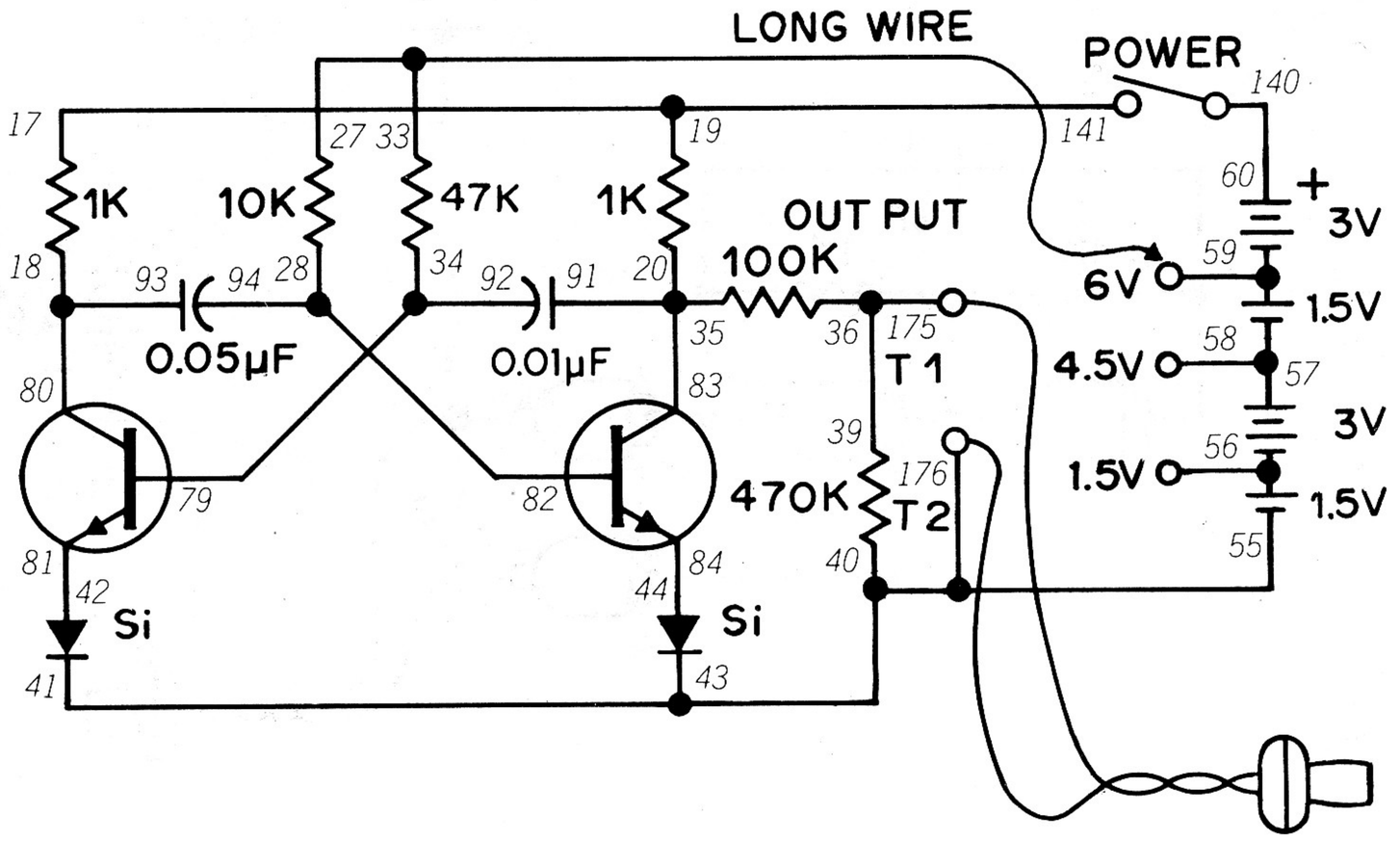

VCO?? What's that???

"VCO" is short for "voltage controlled oscillator." The name alone should give you a big hint how this Project will work.

When you finish wiring this circuit, turn the Control Knob clockwise to turn power ON. Connect the Earphone to Terminals 1 and 2 on the front panel of your Kit. Take the long wire from terminal 33 and first touch terminal 56 with it. What kind of sound do you hear through the Earphone? Now touch terminal 57 with the long wire. Do you still hear the same sound? Try touching terminals 59 and 60 as well. What effect, if any, does changing the voltage have upon the sound you hear?

This Project uses the familiar astable multivibrator that we've used in many of our other Projects. The frequency of other types of oscillators is sensitive to changes in voltage as well.

VCO circuits have a variety of uses. They can let you hear when the voltage from a circuit or power source changes. They can warn when the voltage from a source gets too high or too low. And they are often found in electronic musical instruments and devices.

Try to think of some other applications for VCO circuits. You might also want to substitute the Meter or an LED in place of the Earphone to "see" what you've been hearing.

NOTES

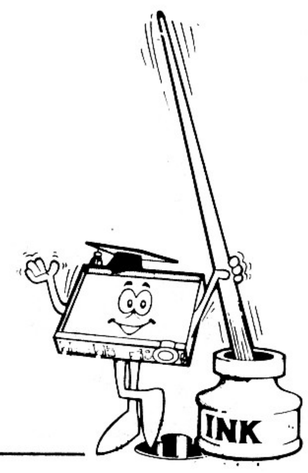

Wiring Sequence

17-19-141, 27-33-LONG WIRE, 35-20-83-91, 36-39-175, 41-43-40-55-176, 42-81, 44-84, 57-58, 60-140, 92-34-79, 80-18-93, 82-28-94, T1-EARPHONE-T2.

177. SOUND OUT TIMER

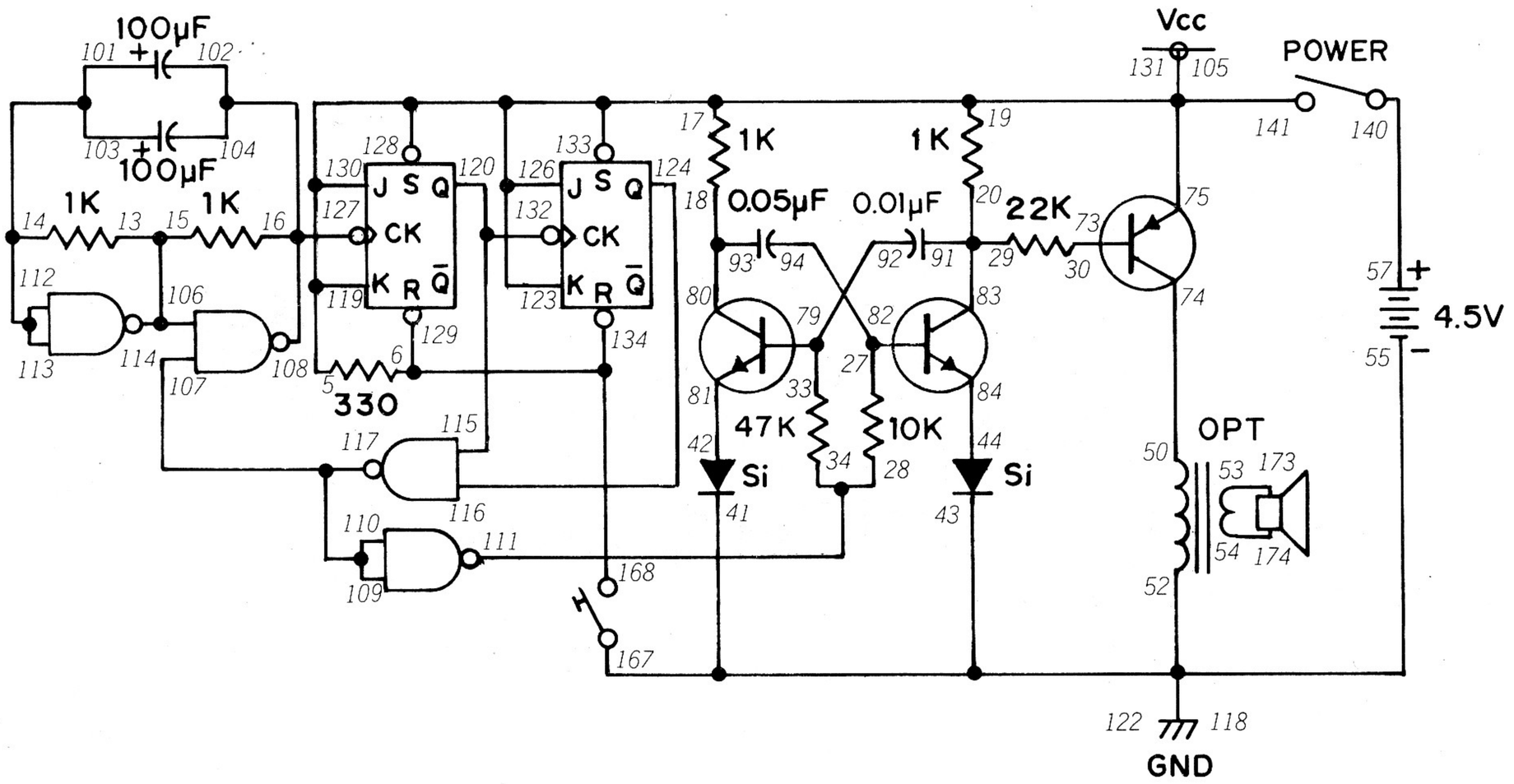

Look closely at the schematic for this Project – notice anything familiar about it? If not, check back to Projects 156, 157 and 162. This circuit uses a divide by 4 counter just like those Projects. That should give you a BIG hint how this circuit works before you build it!

Turn the Control Knob clockwise to ON when you finish the wiring connections. You'll hear a sound from the Speaker. Now press and release the Key. The sound from the Speaker will stop ... *only to resume a short time later!*

You can easily spot the astable multivibrator in this Project. You may have also spotted the multivibrator made up of NAND gates (if you didn't, take at look back at Project 147). Have any idea how these two multivibrators help this circuit operate? Here's a hint: when the Q output of both J-K flip-flops is 1, the NAND multivibrator stops working. And you can also see that the Q outputs of both J-K flip-flops also lead back to the transistor multivibrator through a couple of NAND gates.

Try using just one 100 μF capacitor in the NAND multivibrator circuit. What effect does this have on circuit operation? Did you expect this to happen?

NOTES

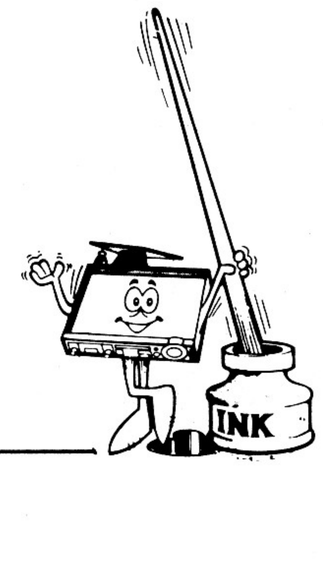

Wiring Sequence

5-119-130-128-123-126-133-17-19-75-141-131-105, 6-129-134-168, 13-15-106-114, 14-112-113-103-101, 18-93-80, 27-82-94, 29-20-83-91, 33-79-92, 28-34-111, 30-73, 42-81, 44-84, 50-74, 53-173, 54-174, 55-122-118-52-41-43-167, 57-140, 104-102-16-108-127, 107-117-109-110, 115-120-132, 116-124.

178. BUZZIN' LED

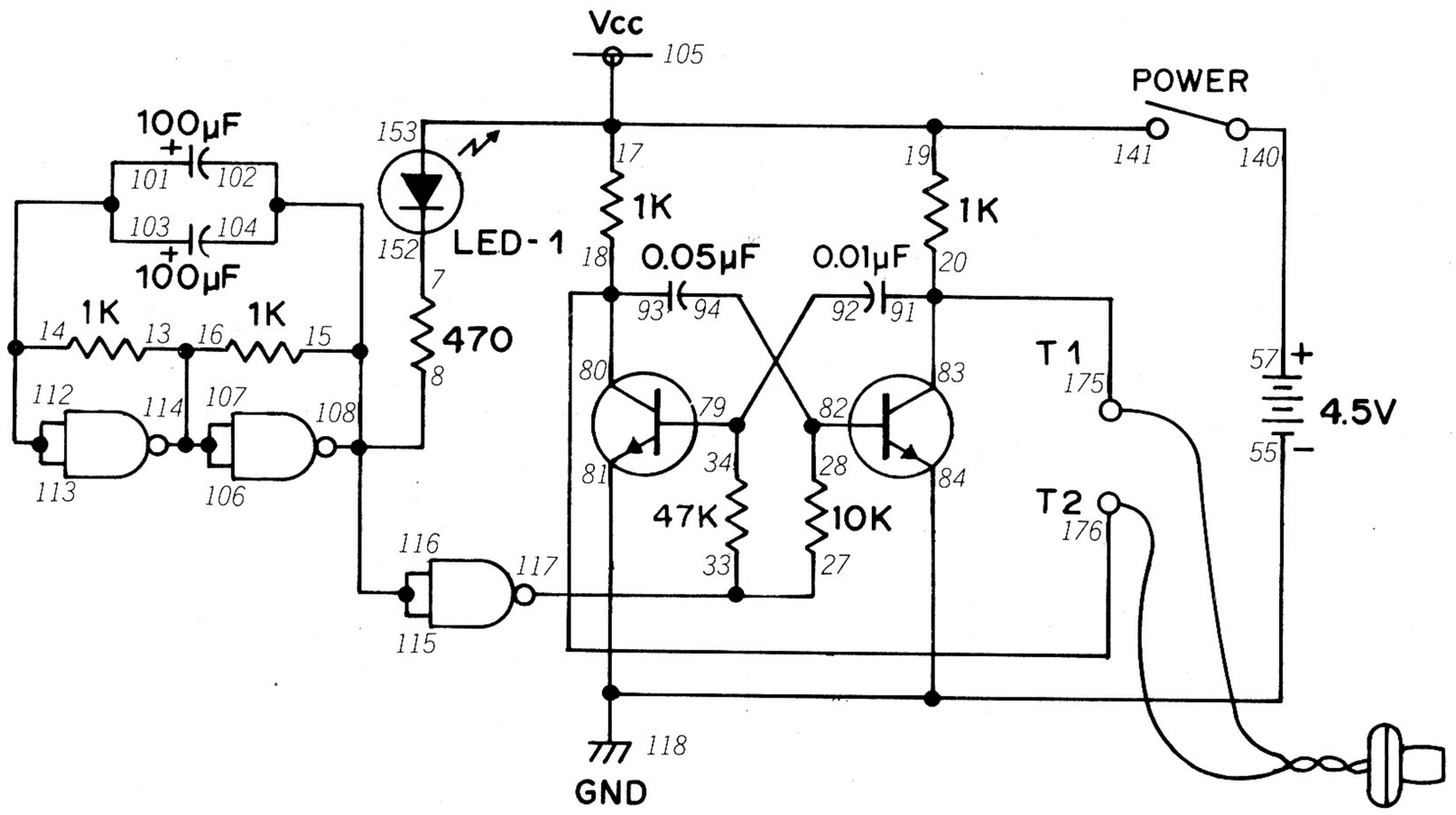

Here's another circuit making use of both transistor and NAND multivibrators. Together they light up LED 1 at the same time you hear a sound through the Earphone.

When you finish building this Project, connect the Earphone to Terminals 1 and 2 and turn the Control Knob clockwise to switch ON. You'll hear a pulse in the Earphone each time the LED lights up. Can you guess why this happens? Here's a clue – suppose the output of the NAND multivibrator is 0. Trace that output from the NAND multivibrator on through to the transistor multivibrator. Do you suppose that the operation of the transistor multivibrator is affected by the NAND multivibrator? (*If the answer is yes, how is it affected?*)

Try using just one 100 µF capacitor in the NAND multivibrator and see what effect it has on circuit operation. Try playing around with the transistor multivibrator and see how you can alter its operation.

It's possible to use the Speaker instead of the Earphone with this Project. You'll need the 2SA Transistors, the Output Transformer and maybe a Resistor or two. Try adding the Speaker – be sure to make a note of the circuit you finally come up with.

NOTES



Wiring Sequence

7-152, 8-15-102-104-115-116-108, 14-101-103-112-113, 16-13-107-106-114, 17-19-141-153-105, 27-33-117, 28-82-94, 34-79-92, 55-118-84-81, 57-140, 91-20-83-175, 93-18-80-176, T1-EARPHONE-T2.

179. SON OF BUZZIN' LED

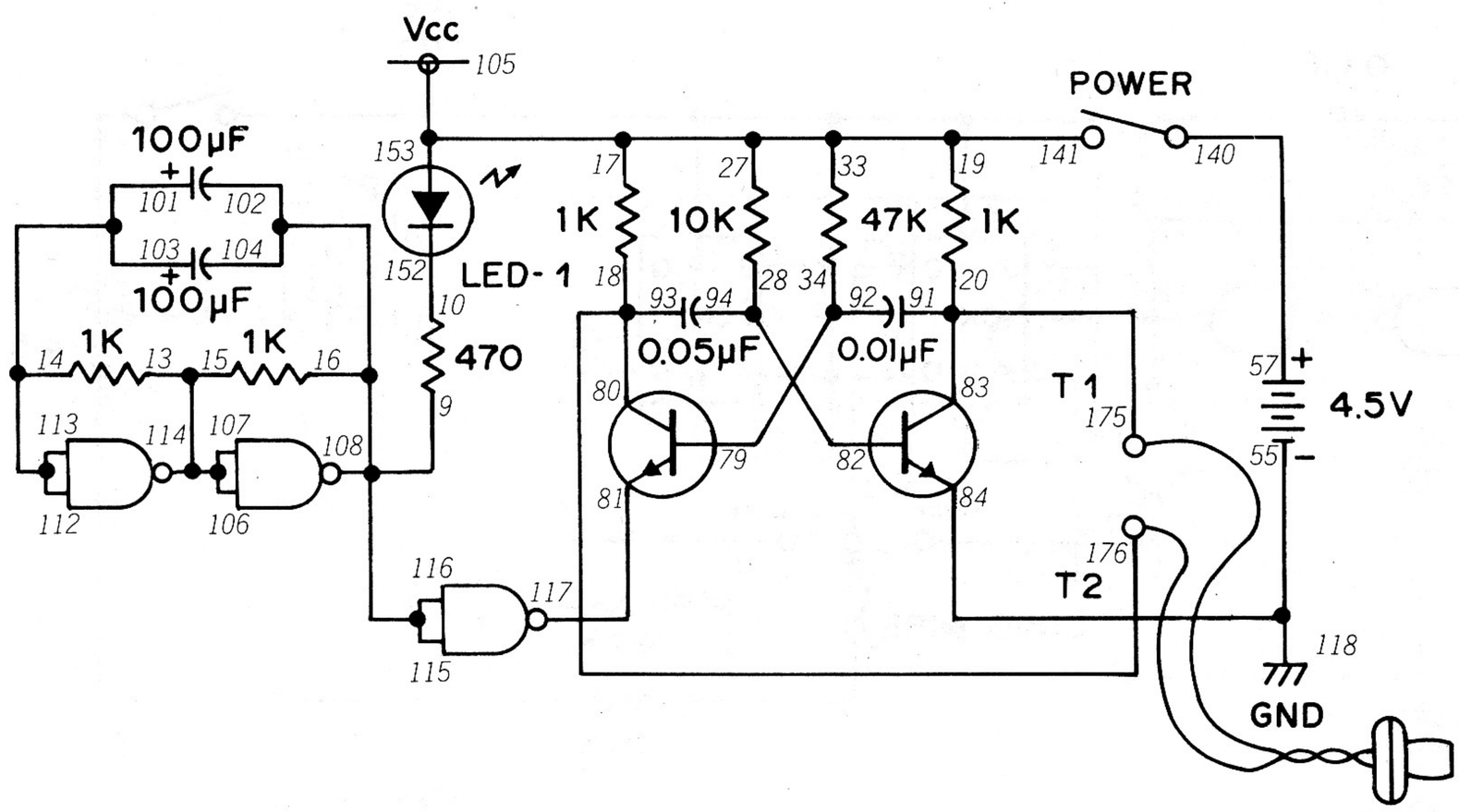

Carefully compare the schematic for this Project with the schematic for the last Project. They're alike in many ways, but there's an important difference. Can you spot what it is? Better still, can you tell what effect this difference will have on the way this Project works compared to the last one? Make your best effort to answer those two questions before building this circuit.

Connect the Earphone to Terminals 1 and 2 and set the Control Knob to ON. You'll see that LED 1 lights up, but you hear nothing in the Earphone. But when LED 1 goes out, then you hear sound in the Earphone!

Try to figure out why this happens. When you think you have the answer, turn this Manual upside down and find out.

When the output of the NAND multivibrator is 0, current can flow through LED 1 to light it but the transistor multivibrator won't work because the left Transistor has a 1 signal applied to its emitter. When the output of the NAND multivibrator is 1, LED 1 won't light but a 0 signal is applied to the emitter of the left Transistor. The transistor multivibrator can then work, and you can hear the sound in your Earphone.

NOTES

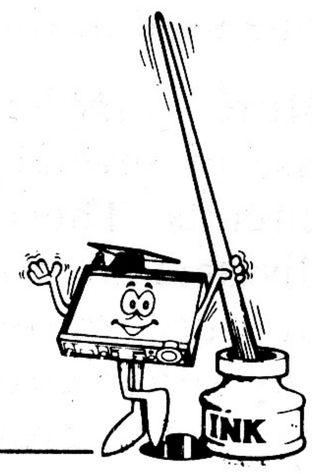

Wiring Sequence

9-16--104-102-108-116-115, 10-152, 13-15-107-106-114, 14-113-112-101-103, 34-92-79, 55-118-84, 57-140, 80-18-93-176, 81-117, 82-28-94, 91-83-20-175, 141-19-33-27-17-153-105, T1-EARPHONE-T2.

180. OCTAVE GENERATOR

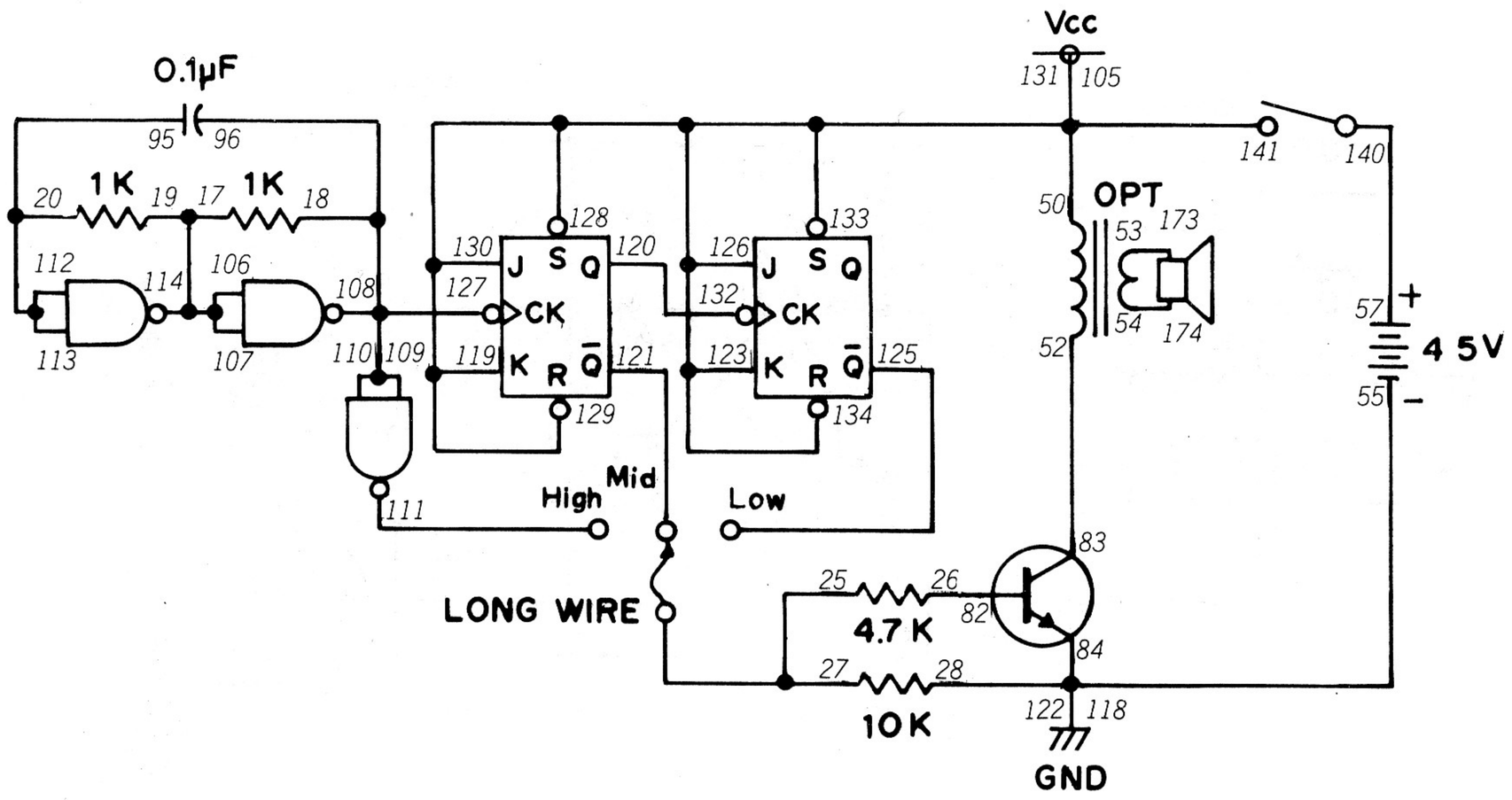

Have you ever heard some electronic music or read something about it? You probably have – electronics is becoming very common in music today. Electronic circuits are being used to imitate the sound of various musical instruments or to create entirely new sounds. Here's a Project that will let you see how some electronic musical instruments work.

You can see from the schematic that this Project is made up of a NAND multivibrator and a J-K flip-flop divider circuit. Using the long wire from terminal 27, you "sample" the output from the multivibrator at three different points: from the multivibrator itself, after it's been divided once and after it's been divided twice. Take the long wire and touch the exposed end to terminals 111, 121 and 125 in sequence, you'll notice that each time the multivibrator's output has been divided, the sound you hear gets lower.

You can further change the sound you hear by substituting a different capacitor for the 0.1 μF one used in the NAND multivibrator.

More complex electronic musical devices make use of several different multivibrator and divider circuits. The outputs from the multivibrators and dividers are combined in several different ways to produce unusual musical effects. Can you think of any other circuits you've played with that could be used to produce music?

NOTES

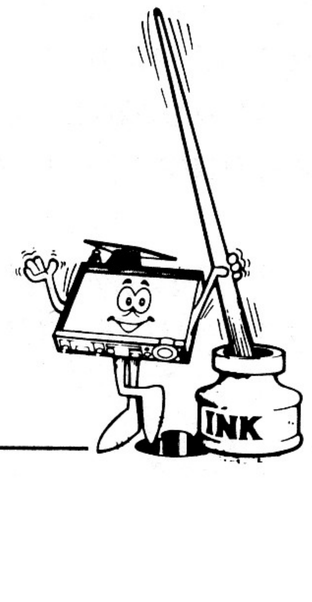

Wiring Sequence

19-17-106-107-114, 25-27-LONG WIRE, 26-82, 28-84-55-118-122, 52-83, 53-173, 54-174, 57-140, 95-20-112-113, 96-18-108-109-110-127, 129-119-130-128-134-133-123-126-50-141-105-131, 120-132.

181. CROSSING SIGNAL

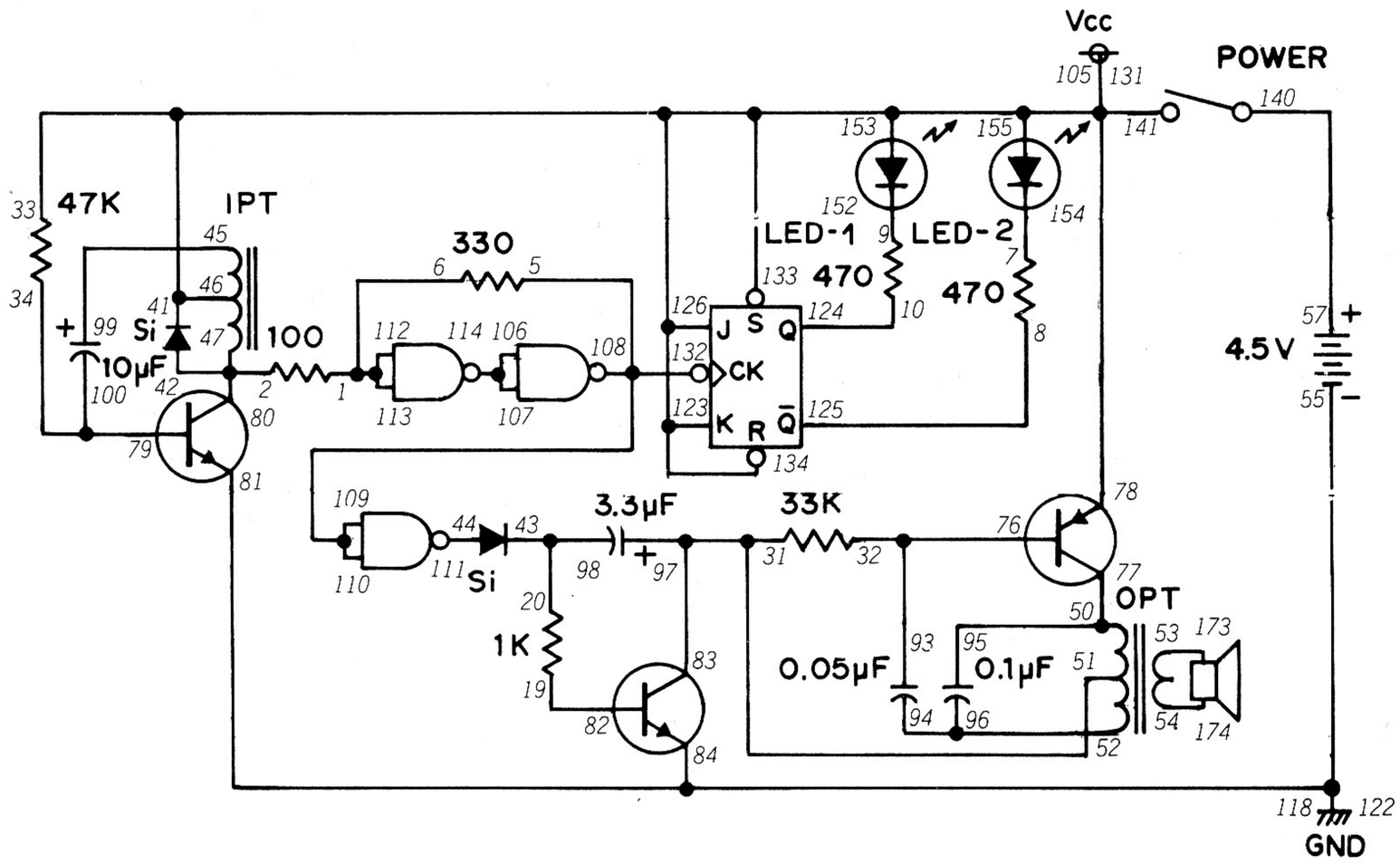

This Project is an all-electronic version of the signal you've seen many times at train crossings. You can also use this circuit as an alarm or "surprise" Project as well.

You can figure out how this Project works by looking at the schematic. LED 1 and LED 2 are connected to the outputs of a J-K flip-flop, and they go on and off as the outputs switch between 0 and 1. An audio oscillator supplies sound to the Speaker. The circuit that generates the clock signal for the J-K flip-flop is called a *Schmitt trigger.* A Schmitt trigger is a bistable pulse generator (*bistable* means the circuit has two steady operating conditions it can be in). A Schmitt trigger takes a slowly changing signal and converts it into one with sharp changes (much like the on-off output of an astable multivibrator). In this Project the Schmitt trigger takes the output of the blocking oscillator and uses it form the clock signal for the J-K flip-flop.

You can see this circuit in action just by setting the Control Knob to ON. The sound and flashing LEDs make this ideal for other applications. Look back at Projects 79 and 93 along with the notes you made for them. Can you figure out ways to use this Project for similar purposes?

NOTES

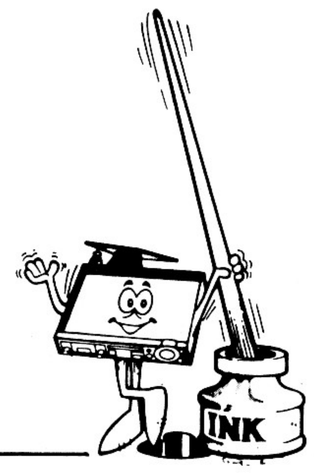

Wiring Sequence

1-6-112-113, 2-47-80-42, 5-132-108-109-110, 7-154, 8-125, 9-152, 10-124, 19-82, 33-41-46-134-123-126-133-155-153-78-141-131-105, 32-76-93, 34-100-79, 43-20-98, 45-99, 44-111, 51-31-83-97, 52-96-94, 53-173, 54-174, 55-84-118-122-81, 57-140, 77-50-95, 106-107-114.

182. DIGITAL TIMER

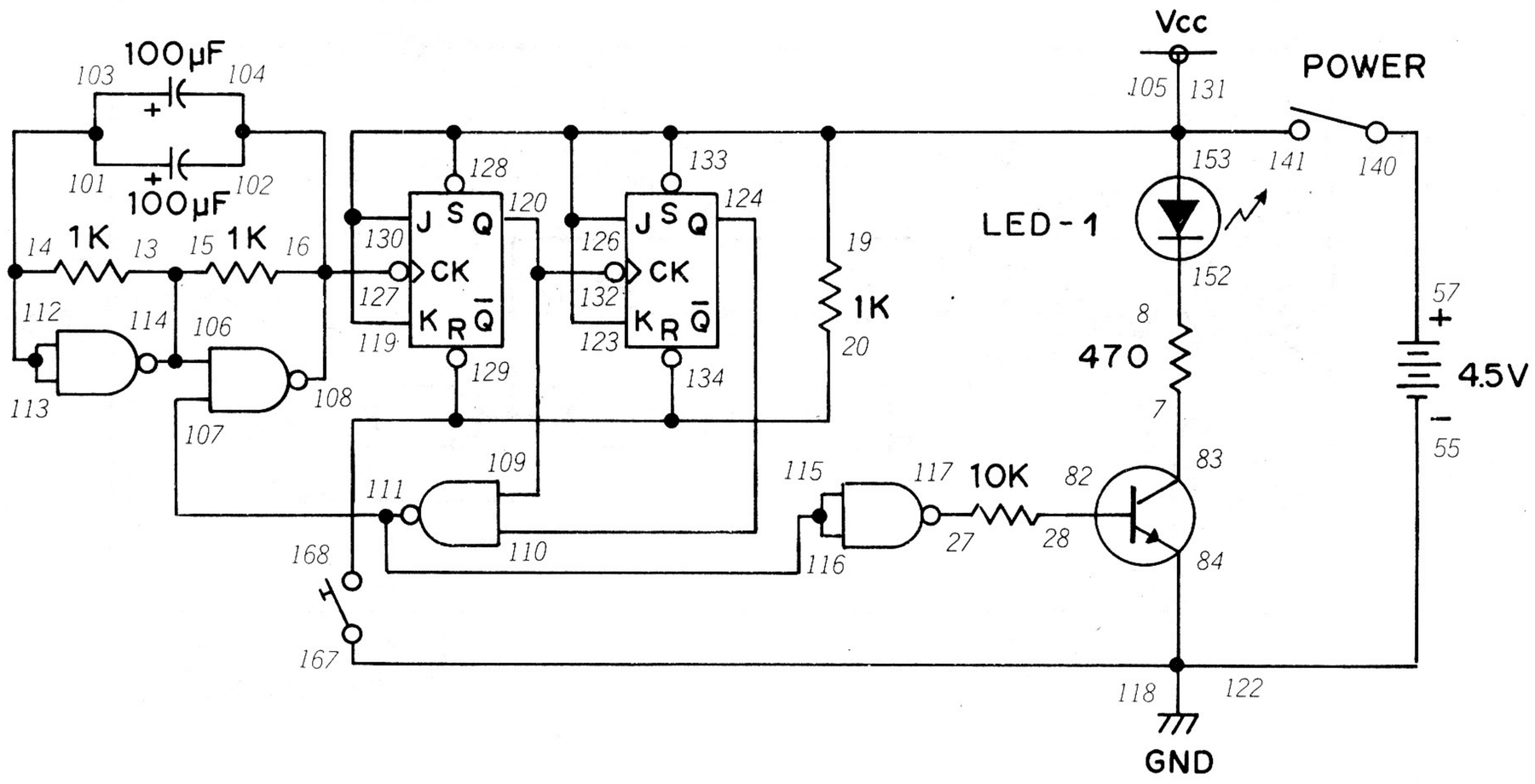

We've built some timer circuits before (like Project 35) but this one is different – it uses digital electronics. The other timers have made use of the discharging rate of capacitors. Can you guess how this Project works from the schematic?

After you build this Project, turn the Control Knob clockwise to switch power ON. The LED many or may not be on. Press the Key once and the LED should go out. Release the Key and watch the LED. After a few moments, the LED will light up.

You can see this Project uses a NAND multivibrator and a J-K flip-flop counter circuit. When you press the Key, the counter is "reset" and the LED is turned off. When you release the Key, pulses from the multivibrator are fed into the clock input of the first J-K flip-flop. After three pulses are input, the Q outputs of both flip-flops are 1. This 1 output goes to a NAND gate, producing a 0 output. The 0 output goes to another NAND gate, where it produces a 1 output. This enables the Transistor to operate, lighting up the LED. You'll also notice that the 0 output also goes to the NAND multivibrator, where it stops the multivibrator from operating.

Try altering the operation of the multivibrator and see what effect it has on the timer. Can you think of any advantages this type of timer would have compared to circuits like Project 35?

NOTES

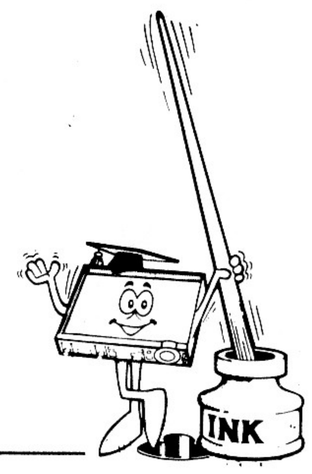

Wiring Sequence

7-83, 8-152, 13-15-114-106, 20-134-129-168, 27-117, 28-82, 55-84-122-118-167, 57-140, 103-101-14-112-113, 104-102-16-108-127, 107-111-116-115, 109-120-132, 110-124, 119-130-128-123-126-133-19-153-141-105-131.

183. SET/RESET BUZZER I

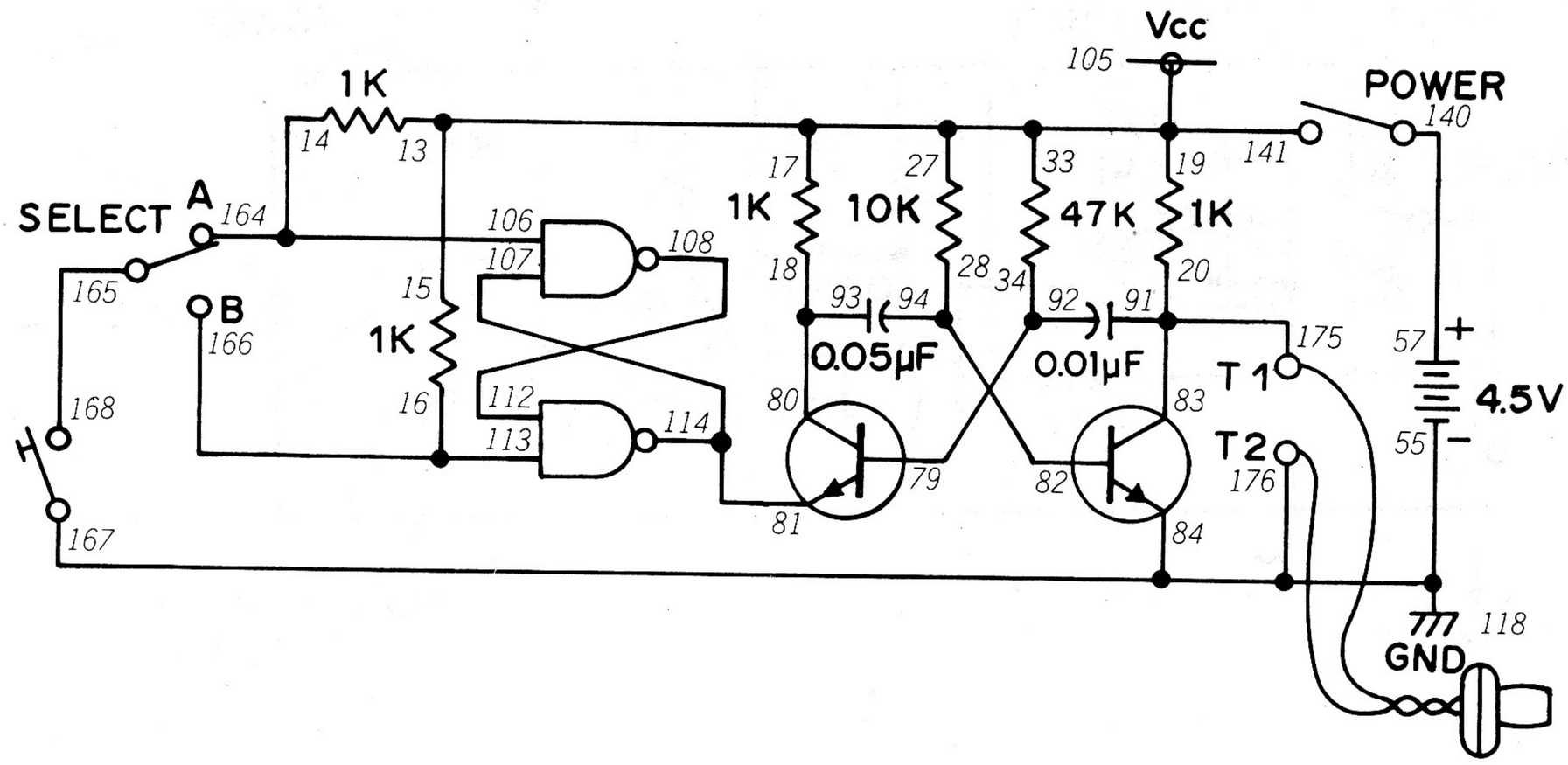

Anything look familar about the schematic for this Project? If not, take a look back at the schematic for Project 142. You'll see that this circuit uses an R-S flip-flop circuit made from NAND gates.

After you finish wiring this Project, set the Select Switch to A. Turn the Control Knob clockwise to ON and press the Key. You'll hear a sound through the Earphone. Try pressing the Key several times. You'll still hear a sound in your Earphone. Now move the Select Switch to B and press the Key one more time. What happens now?

Circuits like this can be used in alarms. They're especially useful since intruders often can't figure out how to make the sound stop. You might also want to experiment using LEDs instead of sound to alert you that the circuit has been set or reset.

NOTES

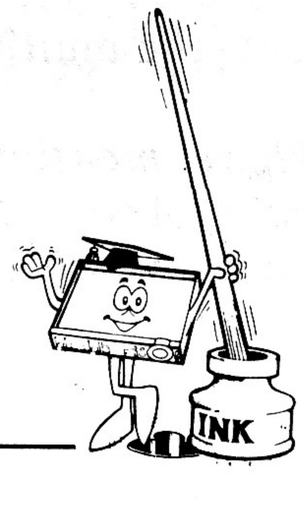

Wiring Sequence

13-15-17-27-33-19-141-105, 14-164-106, 18-93-80, 20-83-91-175, 28-94-82, 34-79-92, 55-176-118-84-167, 57-140, 81-114-107, 112-108, 113-16-166, 165-168, T1-EARPHONE-T2.

184. SET/RESET BUZZER II

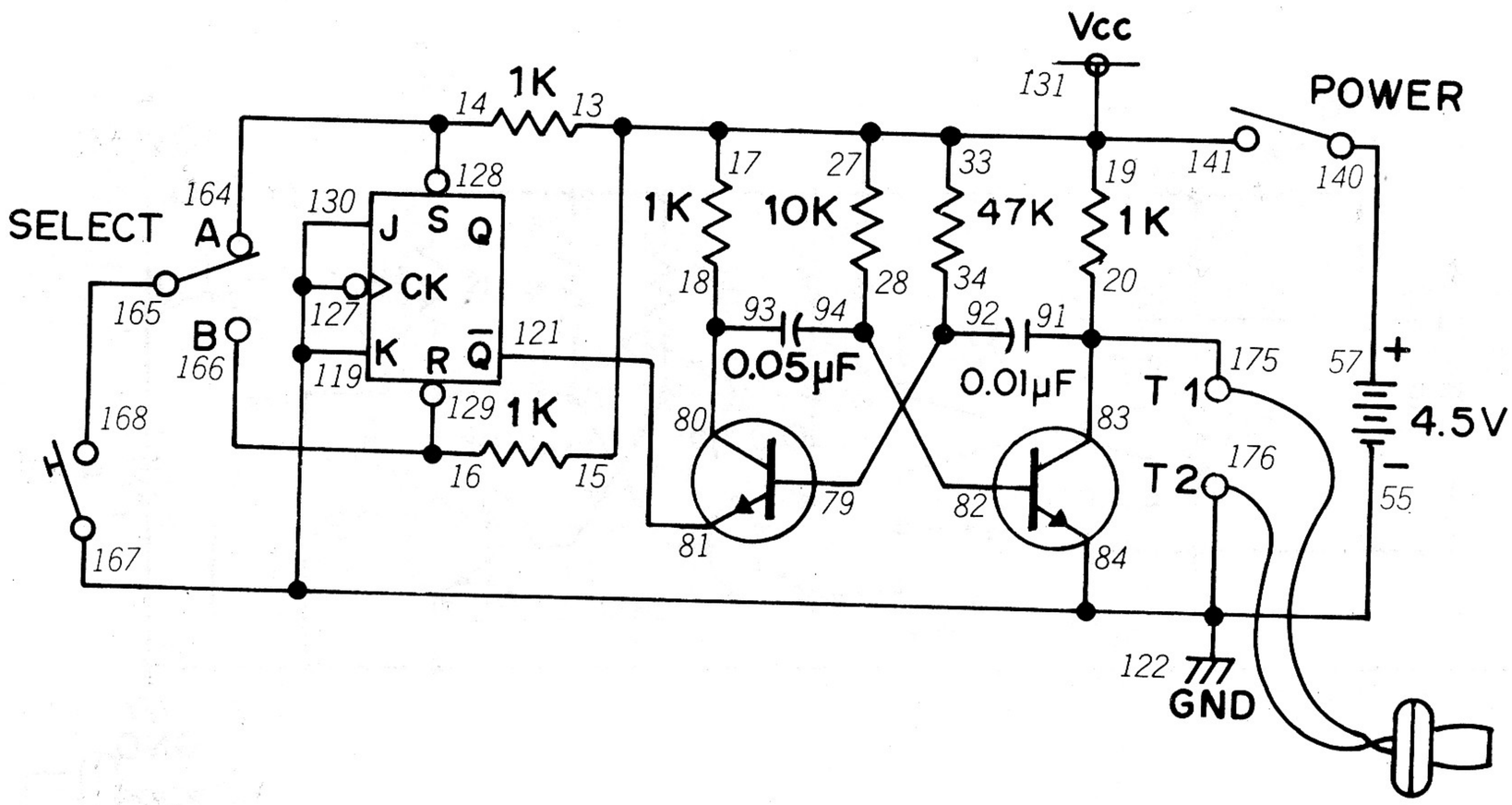

Here's another version of our last Project, this time using a transistor multivibrator and a J-K flip-flop.

Set the Select Switch to A before setting the Control Knob to ON. When you do set the Control Knob to ON, press the Key. You'll hear a sound in your Earphone. Just as in our last Project, you'll continue to hear sound in the Earphone no matter how many times you press the Key again. Set the Select Switch to B and press the Key one more time. You'll hear the sound stop.

You can see from the schematic that the transistor multivibrator is controlled by the $\overline{Q}$ output of the J-K flip-flop. When you have the Select Switch at A and press the Key, $\overline{Q}$ will be 0 and the transistor multivibrator will keep on working regardless of how many more times you press the Key. But if you press the Key when the Select Switch is at B, Q becomes 1. This output goes to the emitter of the left Transistor in the multivibrator and prevents the multivibrator from working.

(We've mentioned this before – but we'll say it again. Aren't transistors terrific in the way they can be switched on and off so easily?)

NOTES

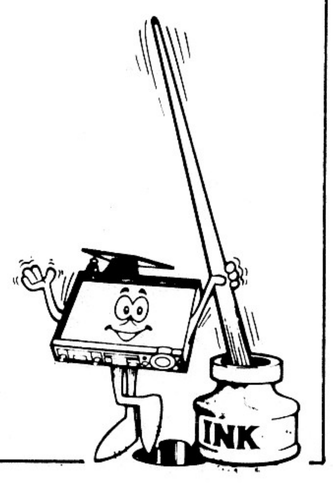

Wiring Sequence

13-15-17-27-33-19-141-131, 14-128-164, 16-129-166, 18-93-80, 20-91-83-175, 28-94-82, 34-92-79, 55-127-167-130-119-84-176-122, 57-140, 81-121, 165-168, T1-EARPHONE-T2.

185. SET/RESET BUZZER III

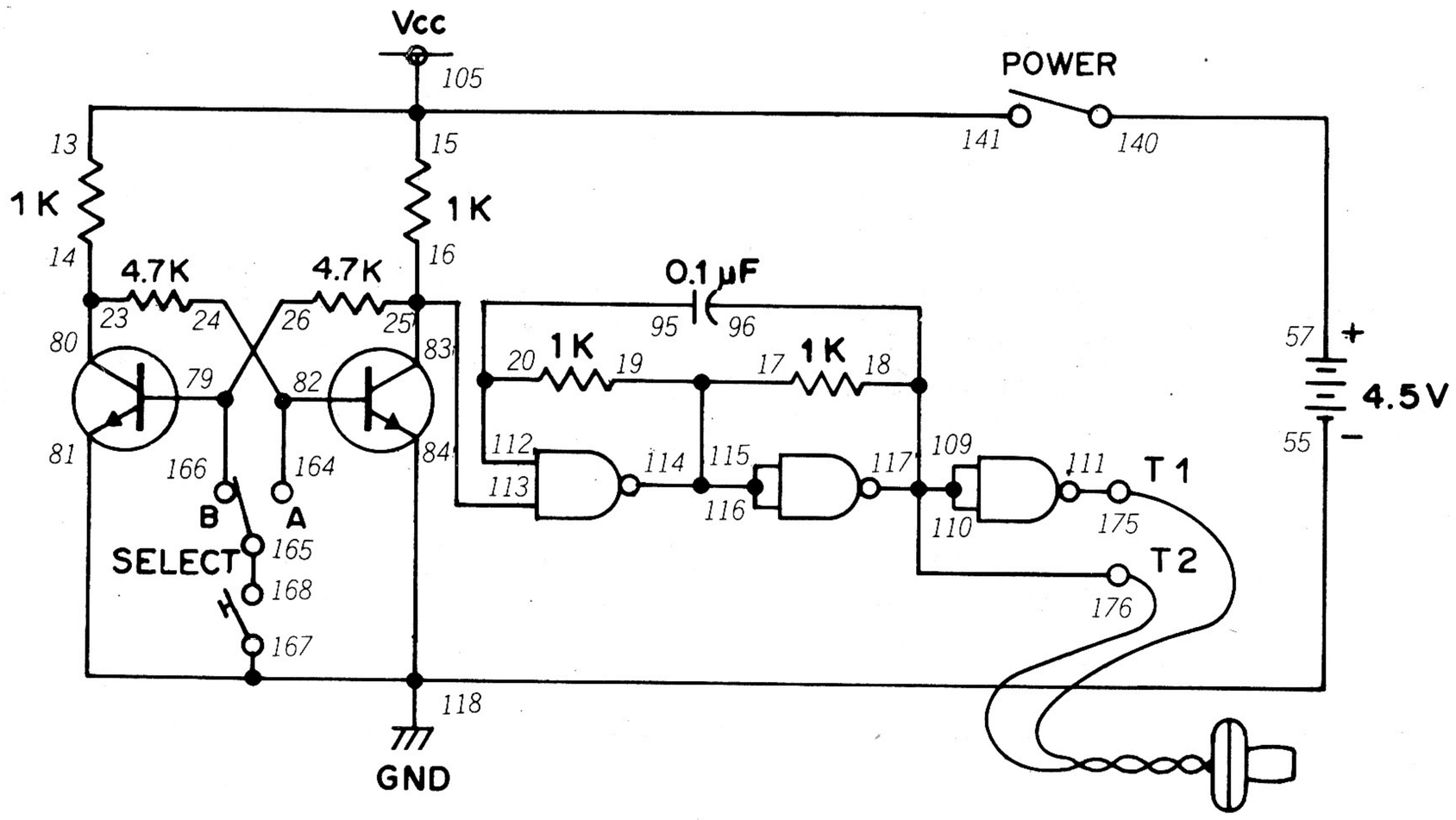

Here's *another* version of our last two Projects. This time we used a NAND multivibrator and an R-S flip-flop made using transistors.

This circuit works like our last two. When you set the Select Switch to A and press the Key, you'll hear a sound in the Earphone. You'll continue to hear the sound no matter how may times you press the Key again. Set the Select Switch to B and press the Key and you'll hear the sound stop.

You might want to compare the operation of these last three Projects. Is there any difference between the three circuits? Can you think of some situations where one circuit might be better suited than the other two? Be sure to make some notes about what you found out.

NOTES

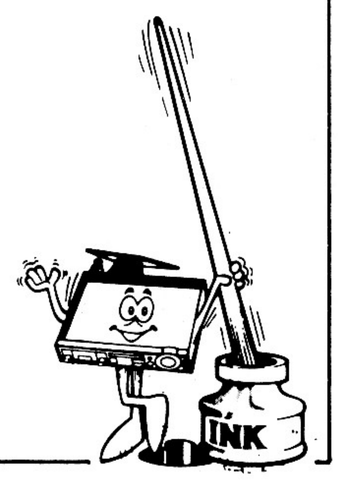

Wiring Sequence

13-15-141-105, 14-23-80, 16-25-83-113, 17-19-114-115-116, 18-96-109-110-117-176, 20-95-112, 24-82-164, 26-79-166, 55-118-167-84-81, 57-140, 111-175, 165-168, T1-EARPHONE-T2.

186. OPTICAL COUNTER

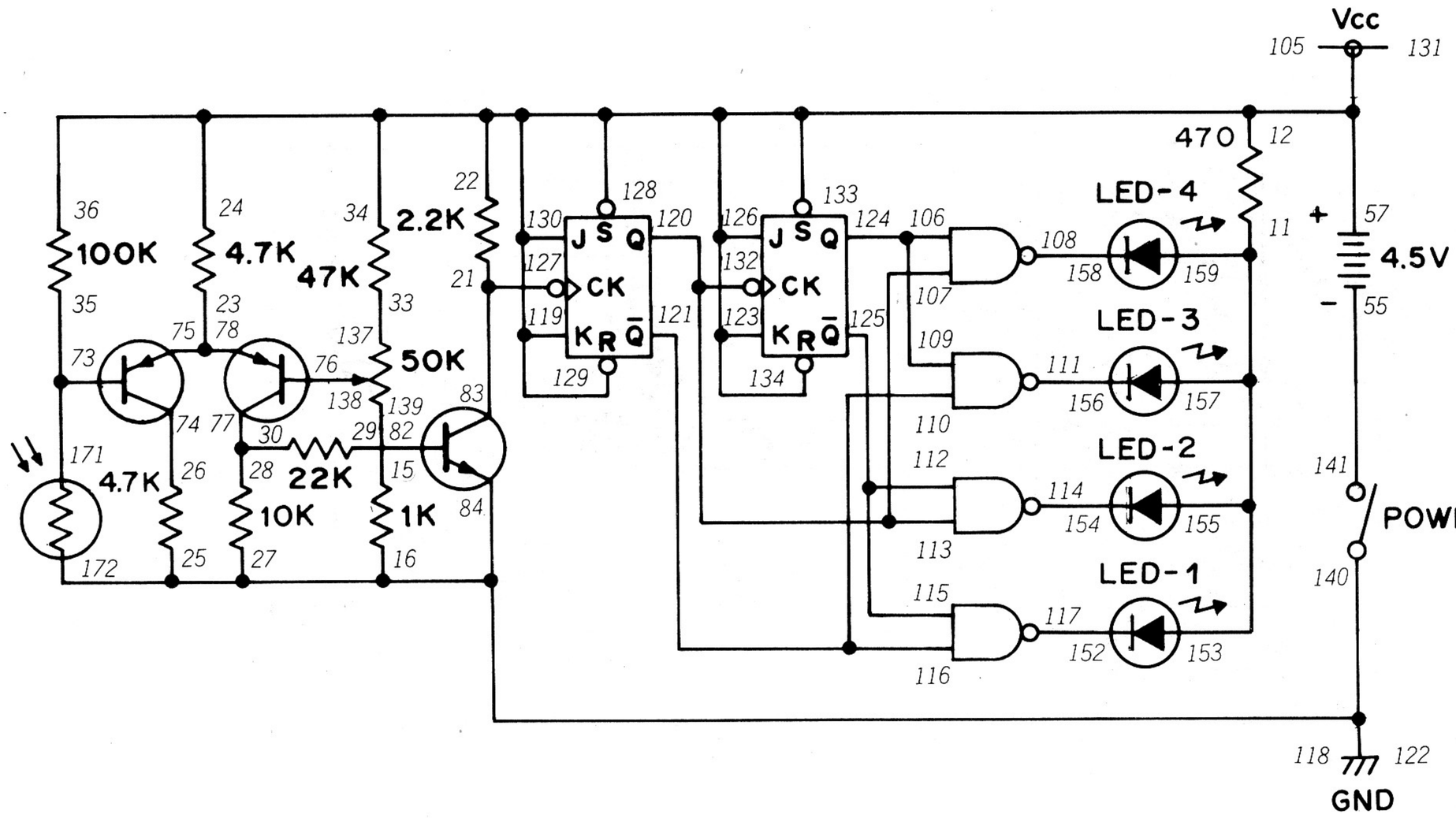

This Project is a simpler version of a circuit that's in use every day around the world. If you've ever wondered how such places as stores or airports are able to count how many people enter their buildings each day, this Project will show you how it's done.

As you can see from the schematic, this Project uses a divide by four counter circuit and line decoder. Each time the light falling on the CdS Cell is interrupted, a clock signal is sent to the first J-K flip-flop. A different LED will light to represent the number of "interruptions" the circuit manages to count.

You'll find this Project works best in a dark room using a light (such as a flashlight) directly striking the CdS Cell. Wave your hand between the beam of light and the CdS Cell and you'll notice the LEDs go on and off to indicate the count. You'll have to adjust the Control Knob to set how "sensitive" this Project is to change in light. You might also want to use different values for the 100K resistor to see what effect they will have on the operation of this Project.

You can see more complicated versions of this circuit located near doorways, stairs, elevators, etc., in many buildings. Each time a person crosses a certain point, a beam of light is interrupted and the counter circuit advances by one. Of course, a digital display of some sort is used instead of LEDs. Very often these devices are located very close to the ground or floor – at foot or ankle high level. You can identify them by a light on one side and another opening on the other side. How many of these devices can you spot in the buildings in your town?

NOTES

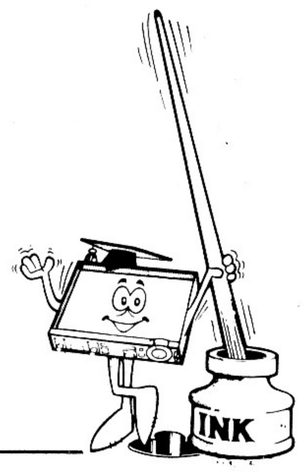

Wiring Sequence

11-153-155-157-159, 12-22-24-36-34-128-129-130-131-133-134-126-123-119-105-57, 15-139, 21-83-127, 23-75-78, 26-74, 28-30-77, 29-82, 33-137, 35-73-171, 55-141, 76-138, 106-109-124, 107-113-120-132, 108-158, 110-116-121, 111-156, 112-115-125, 114-154, 117-152, 118-122-84-27-25-16-140-172.

187. LED SOUND METER

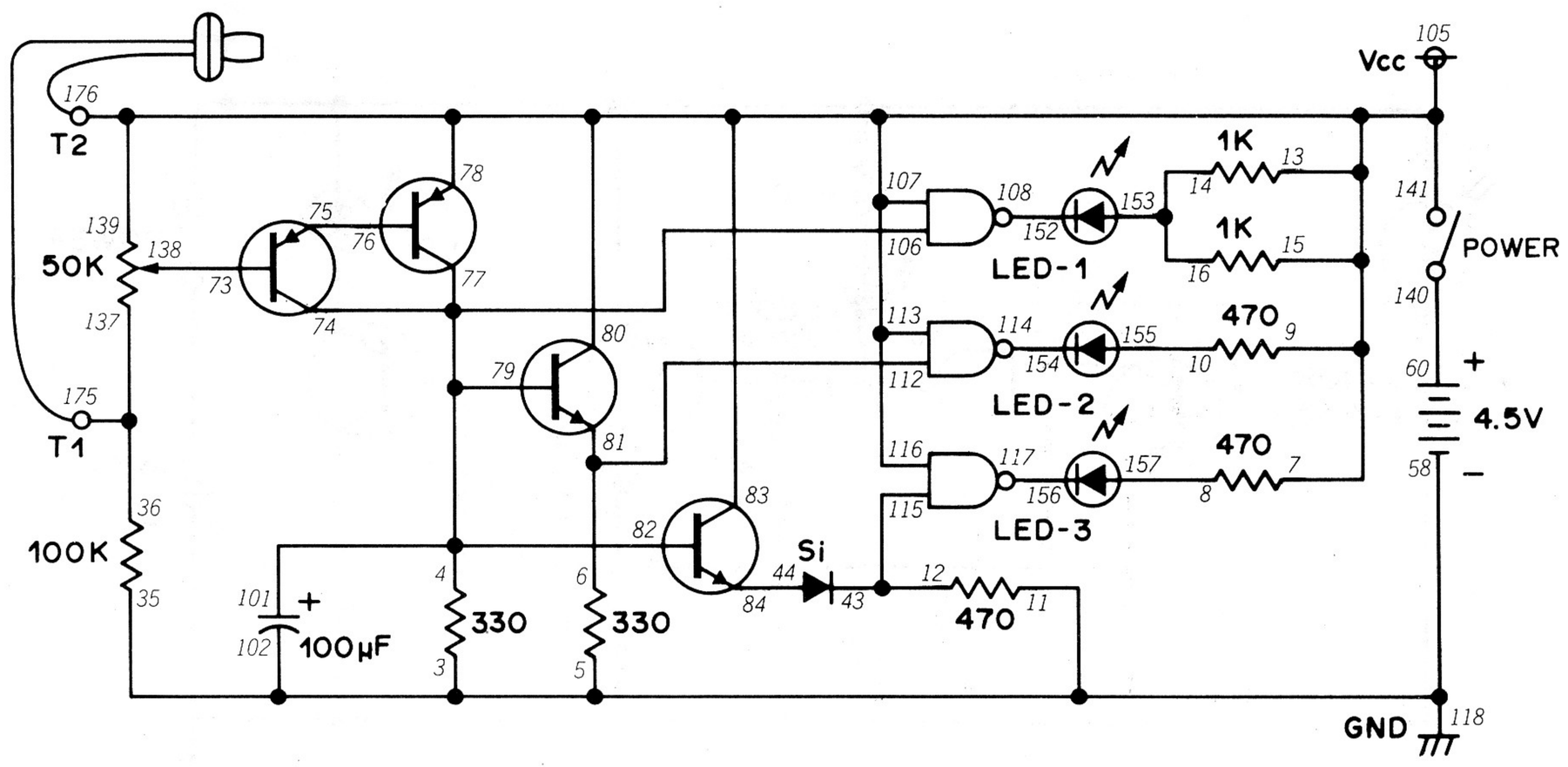

Every seen how loud a sound is ? Probably not, but here's a Project that will let you do just that. (To help you understand how this Project works, you might want to take a look back at Project 41 before starting to build this circuit ...)

Turn the Control Knob to the right, and set it to the center position. When sound enters the Earphone, it's converted to a faint electric current (remember piezoelectricity from Project 71?). This faint current is then amplified by the two Transistors and is applied to the TTL NAND gates which control the LEDs. If the voltage is over 1.5 volts, LED 1 will be lit (the voltage at which the LED will light is called the TTL's *threshold* voltage).

As you remember from Project 41, diodes have a voltage drop across them. Since transistors are two diodes back-to-back, it's not surprising that they have a voltage drop between base and emitter. When the voltage from the 2SA Transistors exceeds about 2.1 volts, LED 2 will be lit (notice that the NAND gate which controls LED 2 has a B-E junction in series with its input). Finally, when the voltage is over about 2.7 volts, LED 3 will light (the Diode and B-E junction of the 2 SC Transistor makes two diode voltage drops).

Now put on your thinking cap – based on what we've told you about the voltage needed to light up the different LEDs, what do you suppose the voltage drop is across each diode (or base-emitter junction of Transistor) in this Project? The answer's below – but don't peek!

You can use this circuit for checking the loudness of your voice, a radio, TV, etc. Can you figure out a way, based on your notes and earlier Projects, to use the Speaker in your Kit instead of the Earphone?

To make the circuit more sensitive, turn the Control Knob clockwise.

Oh yes, the answer to the question about the diode voltage drop – it takes 1.5 volts to light up a LED without a diode or a transistor in series. With one Transistor in series, it takes about 2.1 volts. a difference of 0.6 volts. With both a transistor and a diode in series, it takes about 2.7 volts. That's 1.2 volts difference, or twice 0.6 volts. So the voltage drop across a diode is about 0.6 volts!

Wiring Sequence

4-74-77-79-82-101-106, 5-3-11-35-102-118-58, 6-81-112, 8-157, 10-155, 12-43-115, 13-15-7-9-139-141-78-80-83-113-105-107-116-176, 14-16-153, 36-137-175, 44-84, 60-140, 73-138, 75-76, 108-152, 114-154, 117-156, T1-EARPHONE-T2.

188. SHOT IN THE DARK III

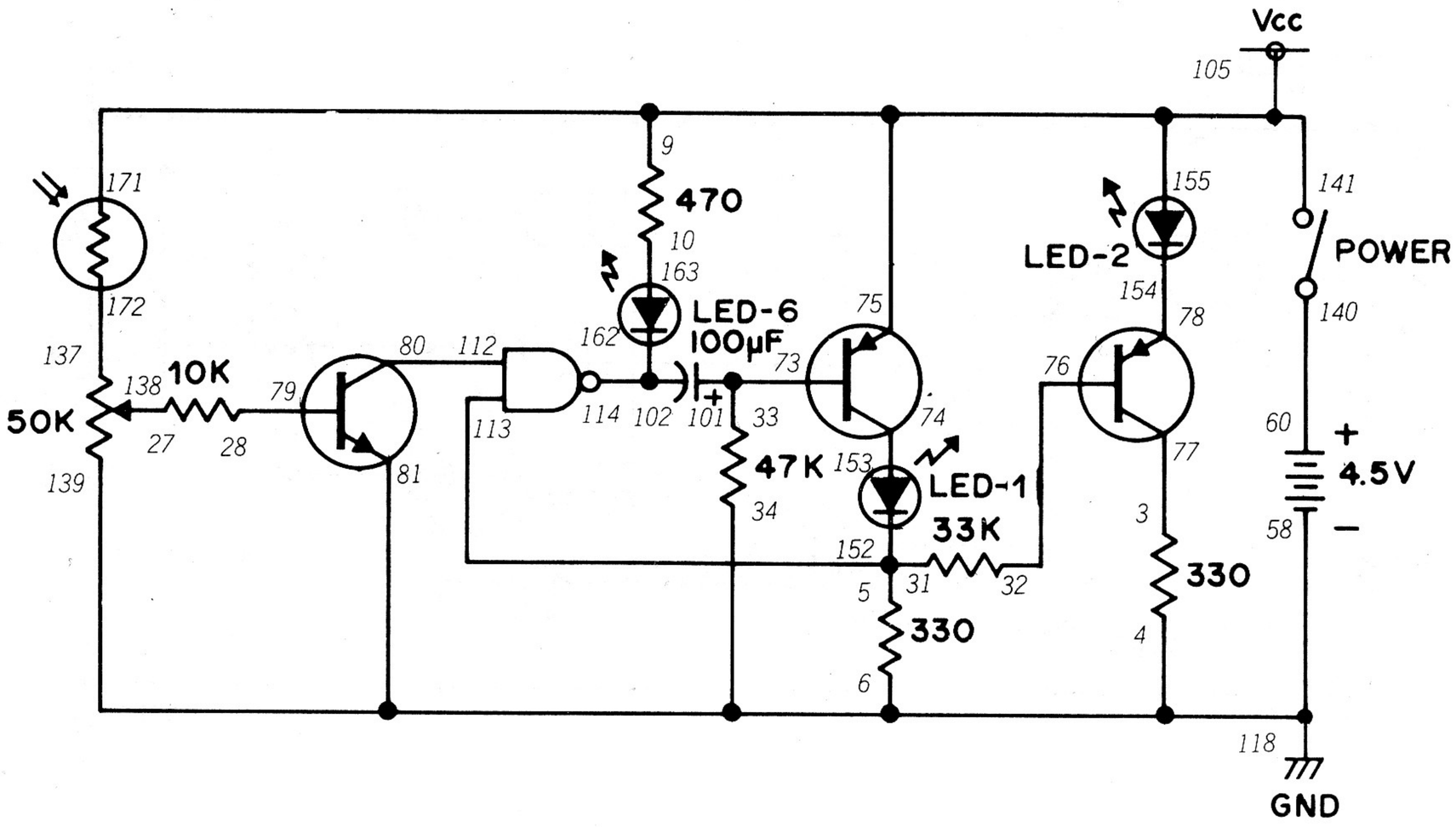

It's been over a hundred Projects since our last "Shot in the Dark" circuit. (*Haven't had one since Project 86!)* Here's another one, but this time using digital electronics.

Like our earlier "Shot in the Dark" Projects, this one measures your skill at hitting the CdS Cell with a beam of light in a darkened room. Your "gun" is an ordinary flashlight.

To play, take your Kit into a darkened room. Turn the Control Knob all the way to the right (fully clockwise). Slowly start turning the Control to the left (counter-clockwise) until you reach the point where LED 6 lights. Now stand a few feet away and try to hit the CdS Cell with the beam from your flashlight. If you're successful, you'll see LED 2 light up and LED 1 will go out. Turn off your flashlight and wait for LED 2 to go out. When this happens, you're ready to "shoot" the "target" again!.

Look back at your notes and earlier Projects and see if there is some way to modify this circuit so you can *hear* when you hit the CdS Cell.

NOTES

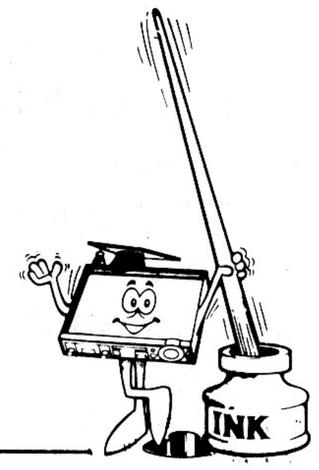

Wiring Sequence

3-77, 5-31-152-113, 9-75-141-155-171-105, 10-163, 27-138, 28-79, 32-76, 33-73-101, 60-140, 74-153, 78-154, 80-112, 114-102-162, 118-58-81-34-4-6-139, 137-172.

189. SET/RESET MATCH

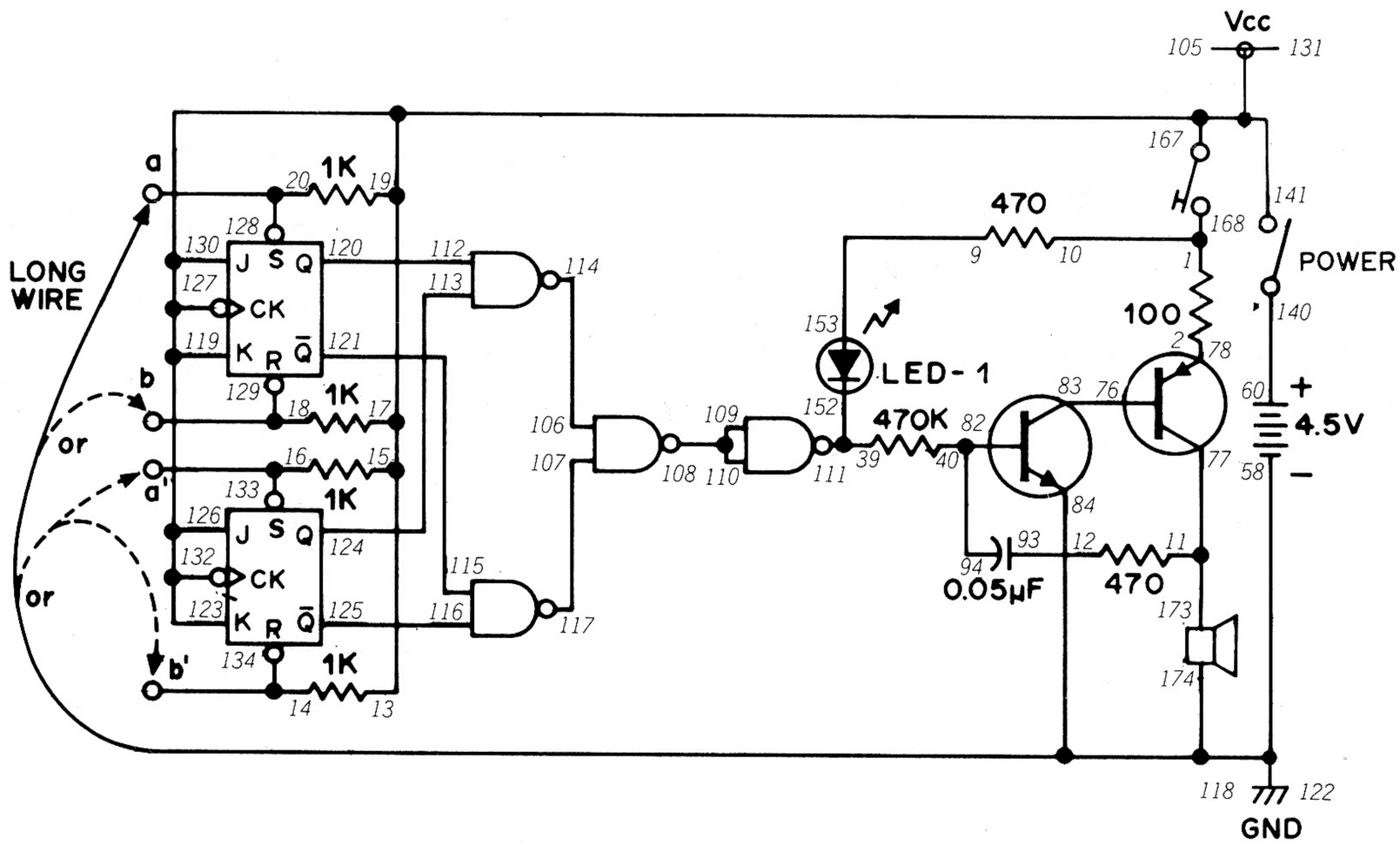

You can't tell if a J-K flip-flop is set or reset just by looking at it. This Project takes that simple fact and makes a game out of it.

As you can see from the schematic for this Project, you use the long wire from terminal 174 to set or reset both J-K flip-flops. You can use this circuit as a game for two people. First turn the Control Knob to ON. Next one player takes the long wire from terminal 174 and touches either terminal 128 or 129. The other player then takes the long wire and touches either terminal 133 or 134. Then one player presses the Key. If both players managed to "match," LED 1 lights. If not, a sound comes out of the Speaker.

Be sure to play with this circuit a few times and find out whether the LED lights when both flip-flops are set or reset (or both). You can also use this circuit to "test" the compatibility of two people. If the LED lights, the two people are compatible; if you hear sound from the Speaker, then the people aren't compatible! Try some variations of this basic circuit – see if you can add a multivibrator or the Select Switch, for example.

NOTES

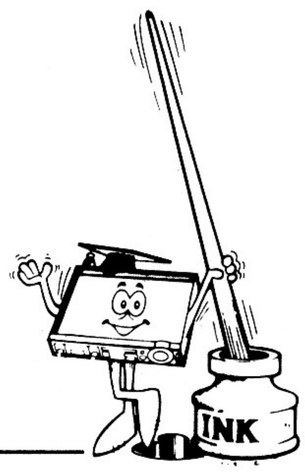

Wiring Sequence

1-10-168, 2-78, 9-153, 11-77-173, 12-93, 13-15-17-19-141-167-127-130-131-132-126-123-119-105, 14-134, 16-133, 18-129, 20-128, 40-82-94, 58-118-122-84-174-LONG WIRE, 60-140, 76-83, 106-114, 107-117, 108-109-110, 111-39-152, 112-120, 113-124-115-121, 116-125.

190. NUMBER DISPLAYS

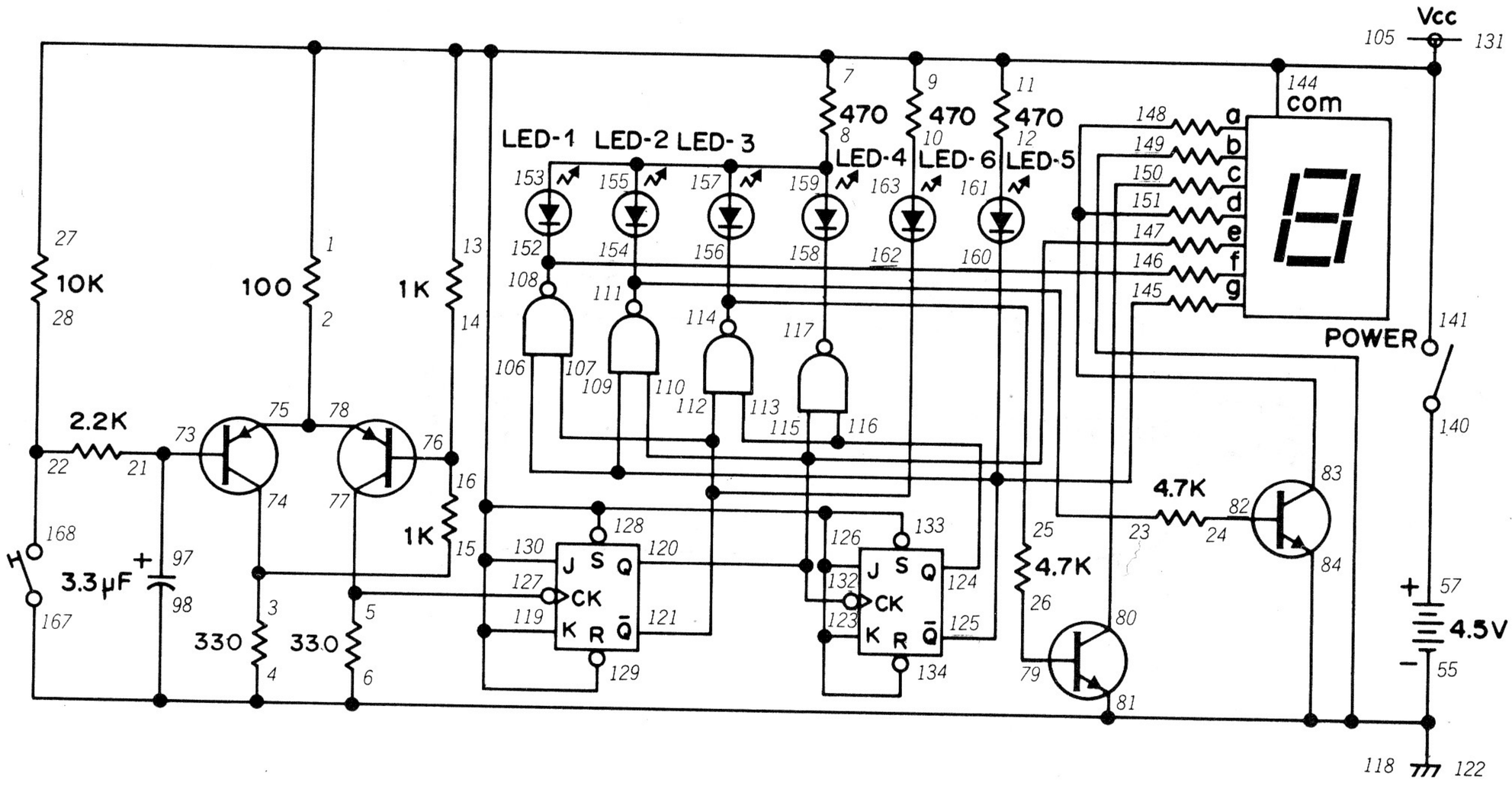

Ever heard of *binary* numbers? (*Surely you remember what we said back in Project 160?*) They're numbers made up of only 0s and 1s. This Project will count the presses of the Key and display the results in binary and decimal (1, 2, 3, etc.) form.

You can see from the schematic that this Project uses a divide by four counter and a line decoder. Each time you press the Key, you input a clock signal and cause the counter to advance by one.

When you finish building this Project, set the Control Knob to ON. Press the Key slowly. You'll see the Display show the numerals 0, 1, 2 and 3. LEDs 1 through 4 will light up in turn as the Key is pressed. But look at LEDs 5 and 6 – why are they lighting up like they do?

LEDs 5 and 6 are displaying binary numbers. Suppose 0 represents an LED that is off and 1 represents an LED that is lit. As you press the Key, here's what you'll see LEDs 5 and 6 do:

(0 0) (0 1) (1 0) (1 1) (0 0)

That illustrates how the binary number system goes. (Remember? Let's review ...) 0 is 0 just like in our decimal system, and 1 is also 1. But what happens when we reach 2? In our decimal system, we use the digits 0 through 9 to make up all numbers. When we reach 9 in the decimal system, we go to 10. The same thing happens in the binary system. "10" represents 2, "11" represents 3 ... and "100" represents 4. Since our counter only counts 0, 1, 2 and 3, "11" is the largest binary number displayed by this circuit. Ask your math teacher to recommend some books about the binary number system.

We've already mentioned that binary numbers are used to store numbers in computers. Sometimes you'll see the words *octal* and *hexadecimal* used to describe the numbers used in microcomputer systems. Try looking up the meanings for those two words in a dictionary.

NOTES

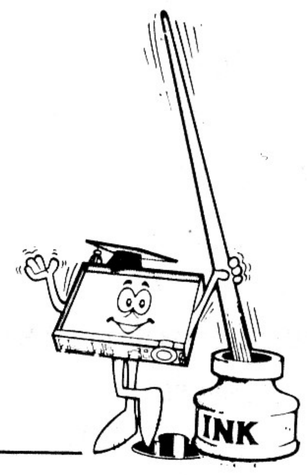

Wiring Sequence

2-75-78, 5-77-127, 6-4-149-98-81-84-167-122-118-55, 8-153-155-157-159, 10-163, 12-161, 14-16-76, 15-3-74, 21-73-97, 22-28-168, 23-154-111, 24-82, 25-156-114, 26-79, 27-11-13-1-7-9-141-144-128-129-130-131-133-134-126-123-119-105, 57-140, 80-150, 83-148-151, 106-109-125-160-145, 107-112-121-162, 108-152-146, 110-115-120-132-147, 113-124-116, 117-158.

191. CIRCUIT CONTINUITY CHECKER

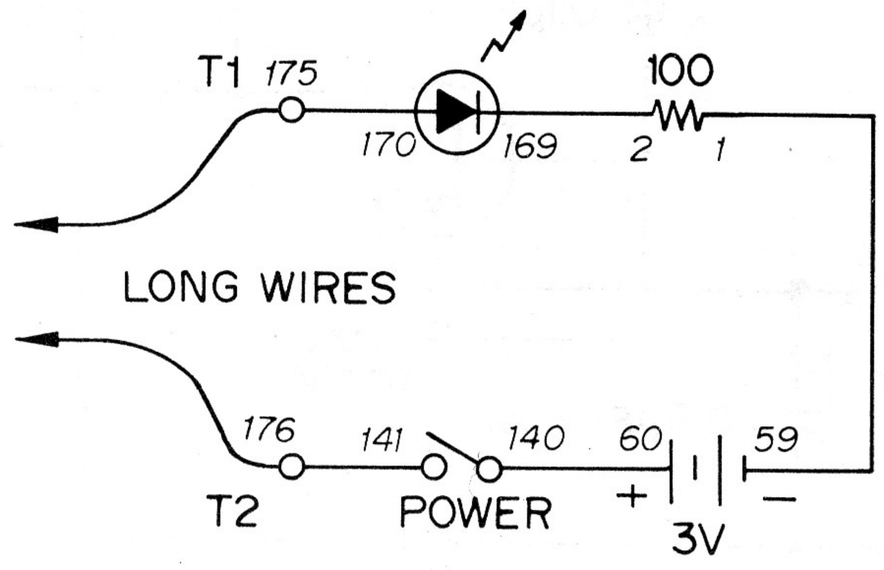

We're now going to look at how we test electronic circuits. One of the simplest things we might want to find out is whether or not a part of a circuit is *open or closed.* (Remember those terms from Project 24?). This Project is simple but it does the job.

You can probably figure out how to use this Project just by looking at the schematic. Turn the Control Knob clockwise to switch power ON and place two long wires at opposite ends of the circuit part you want to test. If the electricity is able to flow through the circuit, the LED will light. If it does not light at all, you'll know the circuit portion is open.

This is an especially handy circuit for testing items such as insulated wire or cable. You can't tell if a plastic-covered wire can conduct electricity by looking at it – you have to use a tester like this. This device is also helpful in trying to find out if there's an electric current flowing along a path where it's not supposed to. (This is called a *short* circuit.)

You can use this circuit to check the conductivity of a wide variety of objects around your home. But don't use this Project to check the conductivity of anything connected to a wall electric outlet (such as an electric range or record player). *In fact, don't use this circuit to check anything connected to a source of electricity – even if it's only batteries.* You can test batteries separately (They are not hooked up to anything) to see if they are still fresh. If you try to check something that has an electric current flowing through it, you could burn out the LED.

NOTES

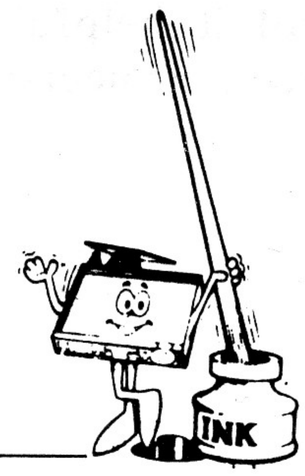

Wiring Sequence

1-59, 2-169, 60-140, 141-176, 170-175, Tl-LONG WIRE, T2-LONG WIRE.

192. ACOUSTIC OHMMETER

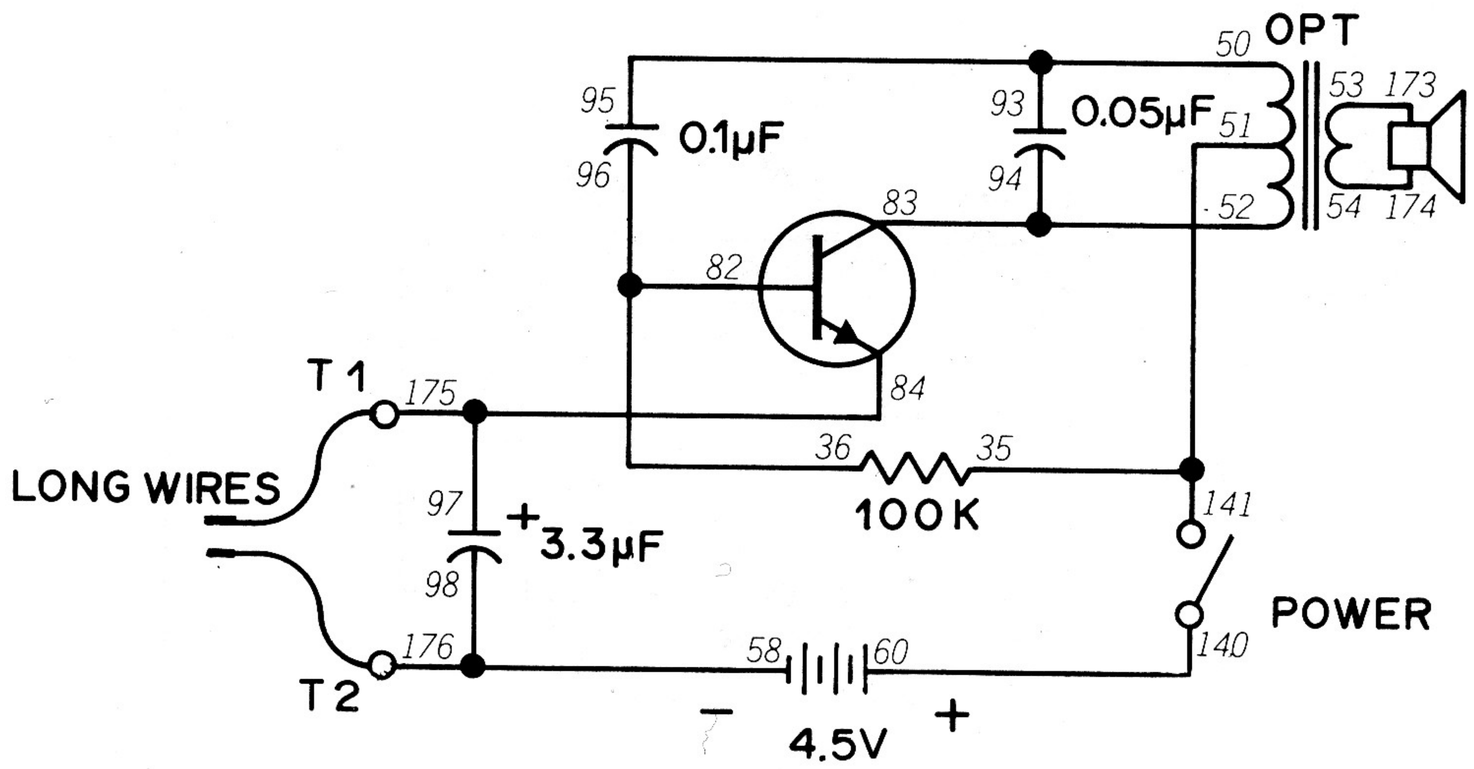

An *ohmmeter* is a device that measures the resistance of a circuit or a part (remember that resistance is measured in ohms). Most ohmmeters have a meter or LED display to indicate the resistance. This Project is a bit different – it lets you *hear* the difference in resistance between various parts.

This Project is actually a version of the audio oscillator circuit we've used in many other Projects. When a resistance is connected across the two long wires, it provides negative feedback so the circuit can oscillate. After you finish the wiring connections, set the Control Knob to ON. Measure the resistance of several different resistors in your Kit. What differences in sound do you notice when you measure different value resistors? Is there a pattern to these changes? (You'll probably find it helpful here to review the notes you've made on audio oscillator Projects.)

Try touching the end of the two long wire together. What do you hear now from the Speaker? Can you explain why this happens? (Again, you'll find it helpful to check the notes you made on earlier Projects.)

NOTES

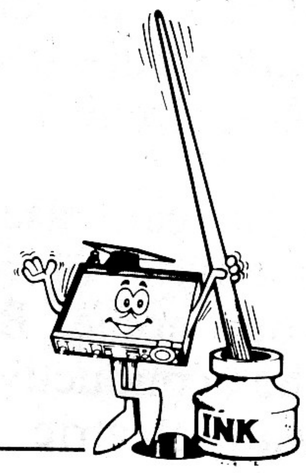

Wiring Sequence

36-82-96, 50-93-95, 51-35-141, 52-83-94, 53-173, 54-174, 58-98-176, 60-140, 84-97-175, T1-LONG WIRE, T2-LONG WIRE.

193. DC VOLTMETER

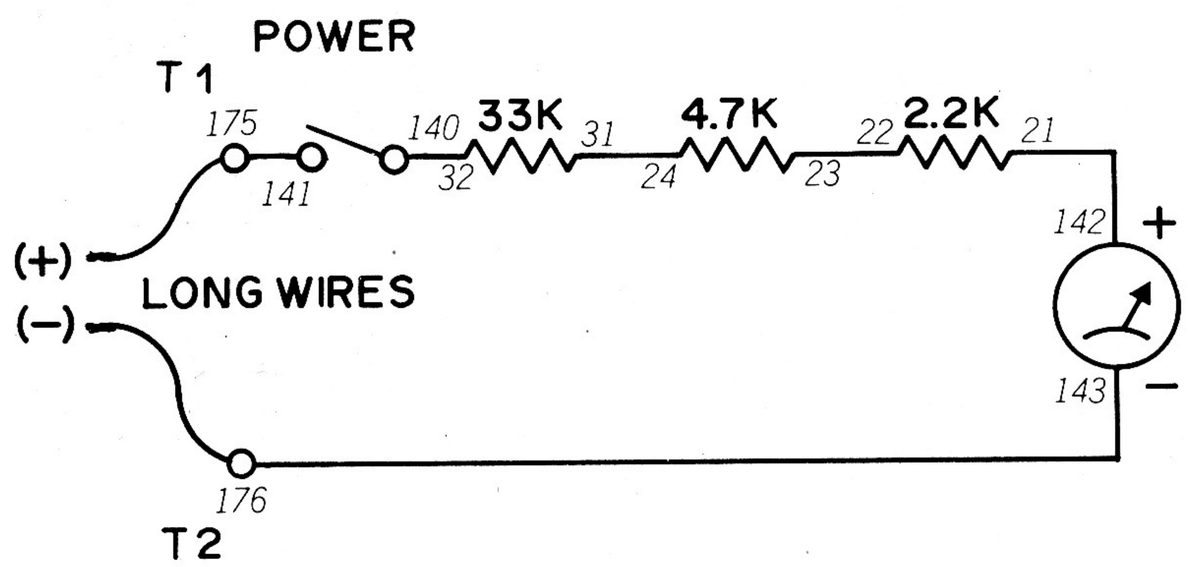

Measuring voltage might be the most commonly performed measurement in electronics. This Project is a simple DC voltmeter that will let you measure up to 10 volts.

You can see from the schematic what a simple Project this is. The Meter itself can handle 0.16 volts. To measure larger voltages, resistors must be inserted in series with the Meter to reduce the voltage down to 0.16 volts. To use this circuit, you'll have to connect the long wires so that the + side of the voltage is connected to the + long wire and the – side of the voltage to the – long wire. Set the Control Knob to ON and you'll notice the Meter move according to how large the voltage is.

First try measuring the voltage of the Batteries used in your Kit. (This circuit is a handy way to check batteries used in flashlights, toys, etc.) You might also want to use this Project to measure voltages at different points in other Projects. You might want to measure the voltage drops across diodes and resistors ... or measure voltages from emitter to base and from collector to emitter in transistor circuits.

Don't try to measure voltage if you think the voltage might exceed ten volts. **And don't try to measure a voltage in any device that's plugged into an AC wall outlet.** If you apply more than 10 volts to this circuit, or try to measure an AC voltage, the Meter will be damaged.

NOTES

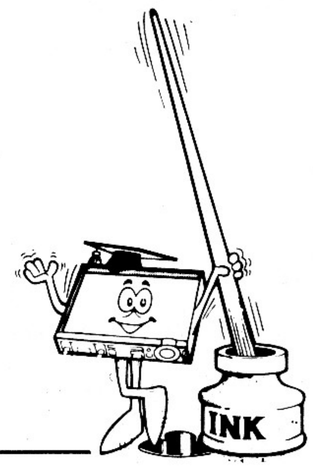

Wiring Sequence

21-142, 22-23, 24-31, 32-140, 141-175, 143-176,
T1-LONG WIRE, T2-LONG WIRE

194. VOLTAGE LEVEL DETECTOR

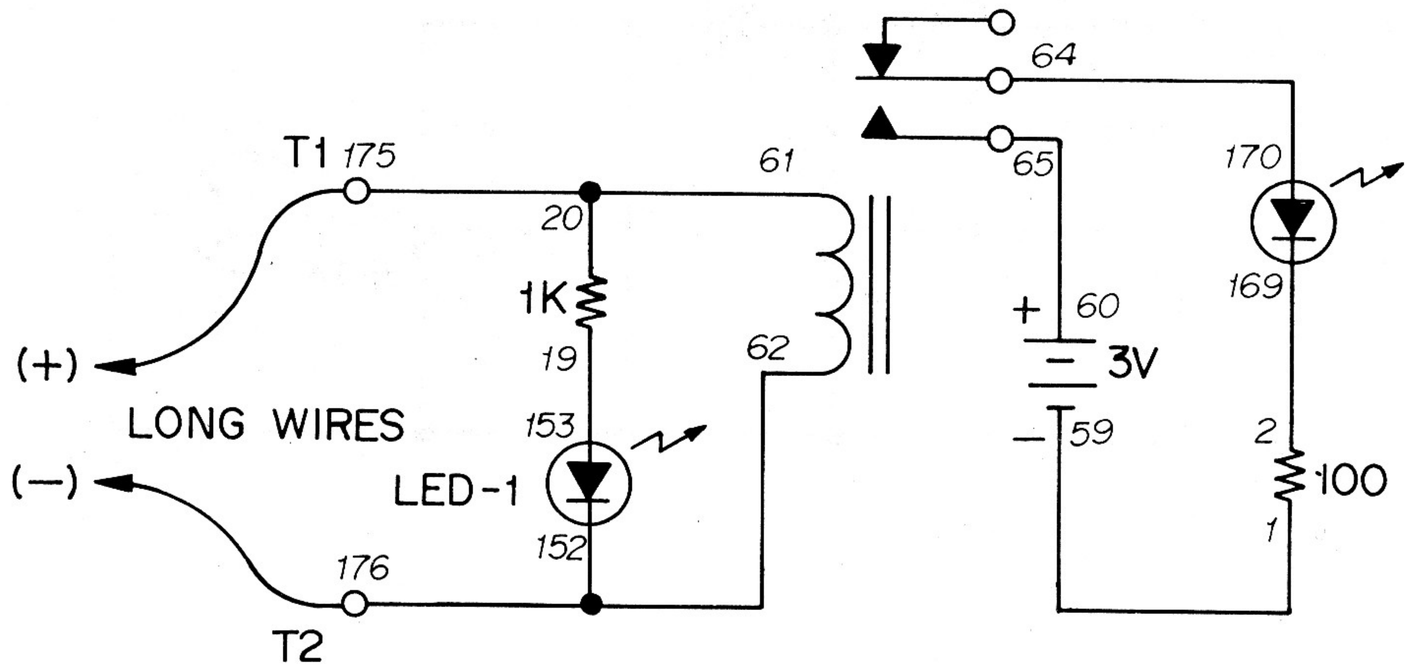

Sometimes we might need to know when a voltage exceeds a certain level. We could use a voltmeter, but we might not want to look at the Meter all the time. The solution would be a circuit that would alert us, by an LED, when voltages exceed certain levels. Here's a circuit that does just that.

You can figure out how this Project works by looking at the schematic. When the two long wires are connected to a voltage less than 2 volts, nothing will happen. But when a voltage of over 2 volts is applied, LED 1 will light up. This is because the voltage is high enough to overcome the resistance of the 1K resistor connected in series with LED 1. When the voltage rises from anywhere between 5 to 7 volts, the Relay will operate and the main LED will come on along with the LED 1.

You can use this Project to make sure battery voltages are above certain levels. It can also be used to warn when voltages in a circuit are getting too high. Don't use this circuit to measure voltages above 10 volts – higher voltages might cause damage to the parts used in the Project. Can you think of some situations where a circuit like this might be used? *(An electric power generating facility is one example...)*

NOTES

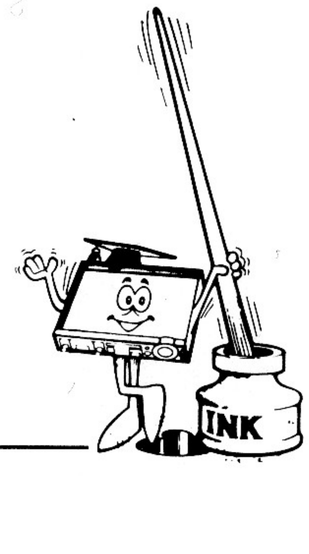

Wiring Sequence

1-59, 2-169, 19-153, 20-61-175, 60-65, 62-152-176, 64-170, T1-LONG WIRE, T2-LONG WIRE

195. AC VOLTMETER

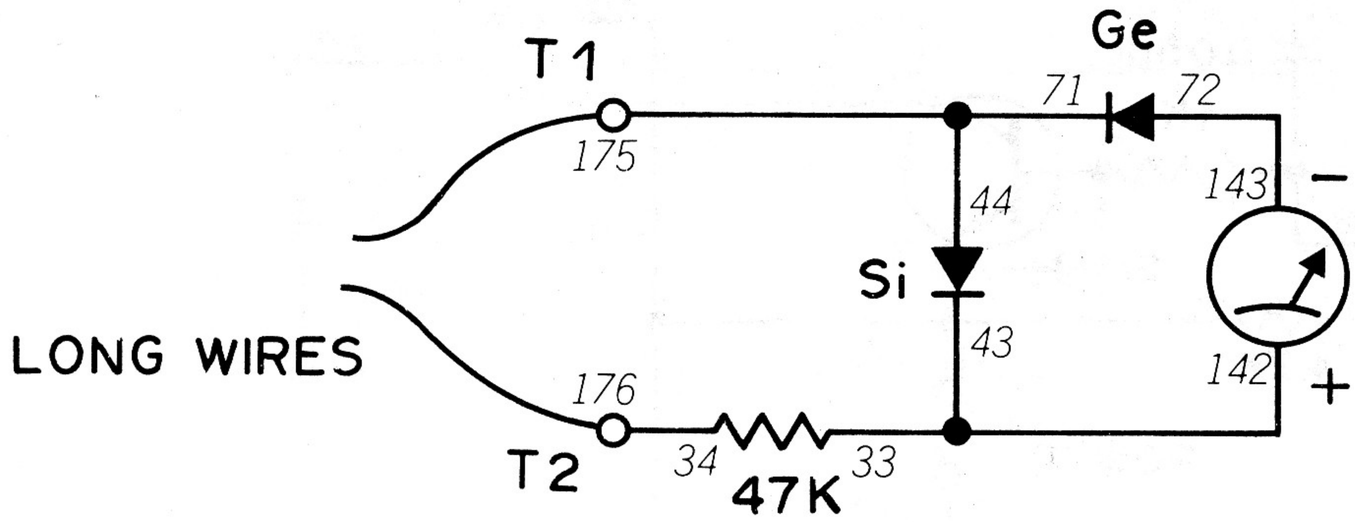

You may have noticed that we called Project 193 a "DC voltmeter." That's because it can be used **only** to measure DC voltages. Before AC voltages can be measured, they must be converted (*rectified*) into DC. This Project will let you measure AC voltages.

You can see on the schematic that diodes are used to change the AC into DC so that it can be measured by the Meter. But can you tell how this circuit works by looking at the schematic?

Remember that AC is current that's flowing in two different directions. Each time the current goes in one direction and then the other is called a *cycle*. The time when the current is flowing in just one direction is called a *half-cycle*. On one half-cycle the germanium (Ge) diode conducts and passes the current on to the Meter. The silicon (Si) diode is reverse-biased (remember that term from Project 43?) and acts like an open circuit. But when the AC reverses direction, the silicon Diode conducts but only applies the voltage drop across it (about 0.6 volt) to the Meter. The Germanium Diode is reversed-biased now and does not conduct.

Is 10 volts AC the same thing as 10 volts DC? Think about it ... DC flows continuously while AC flows in two directions. AC also first starts flowing at a low voltage in one direction, rises and then drops in voltage as the current gets ready to change direction. All this means that 10 volts AC and 10 volts DC aren't the same thing.

When we talk about AC voltages, we often refer to two measures – the *peak* and the *average*. The peak voltage is the largest voltage AC reaches during a cycle. The average voltage, like its name says, is the average of all the values of the AC during one cycle. Usually, a 10 volt peak AC voltage will have an average voltage of 6.37 volts.

You can use this circuit to measure the output of some of the audio oscillator circuits we've built so far. **Don't use this circuit to measure voltages in any device powered by AC voltage.** Such high AC voltages can damage the parts in your Kit or even cause injury.

Wiring Sequence

33-43-142, 34-176, 71-44-175, 72-143, T1-LONG WIRE, T2 -LONG WIRE

196. AUDIO SIGNAL GENERATOR

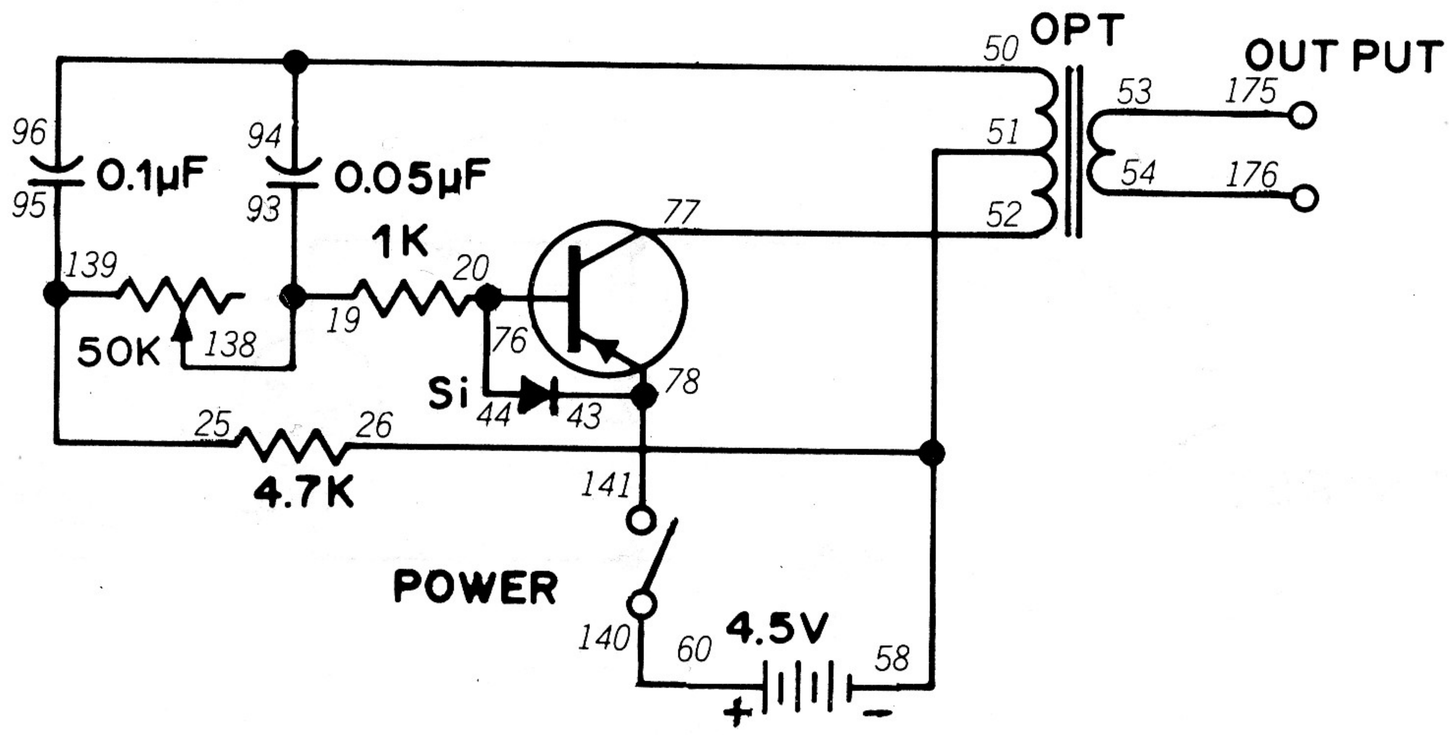

Very often electronic technicians need an audio signal to test amplifiers, speakers, headphones, etc. This Project is a simple audio signal generator that operates on the same principles as the ones used in professional electronics laboratories.

This circuit is an audio oscillator similar to those we've used in earlier Projects. But notice that the output of this circuit is at Terminals 1 and 2. Here you connect the circuit or component you want to have tested, like an amplifer or the Speaker. You can adjust the tone of the audio signal using the Control Knob.

Audio signal generators are often used to adjust stereo equipment. They help make sure the tone that goes into a stereo amplifier is the same tone that comes out of the amplifier. If the amplifier changes the tone of the signal, this is called *distortion*.

NOTES

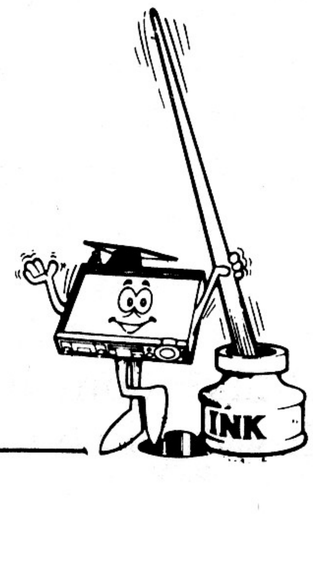

Wiring Sequence

19-93-138, 20-76-44, 25-95-139, 26-51-58, 43-78-141, 50-94-96, 52-77, 53-175, 54-176, 60-140.

197. VOLUME LEVEL METER

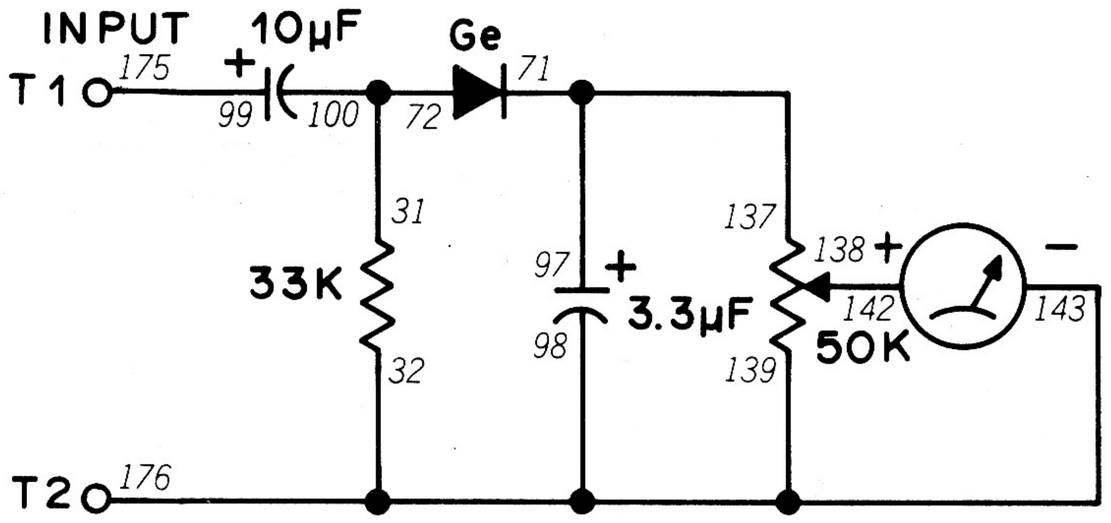

Sometimes we need some way to measure the output of an oscillator or other device. This Project takes the AC output of an oscillator or other device, rectifies it and indicates the output on the Meter.

You can connect the output of an audio oscillator to Terminals 1 and 2 and measure it. You can also connect the Speaker in place of Terminals 1 and 2 and use it to measure the sound of your voice, the TV or a radio. (This is similar to Project 58.) You can adjust how far the Meter swings by using the Control Knob.

Try adding the Key and 3 volts of electricity to this Project in place of Terminals 1 and 2. Try pressing the Key and releasing it rapidly. What happens to the Meter? Can you guess why? (If you can't, take a look back at Project 46 and the notes you made for it.)

NOTES

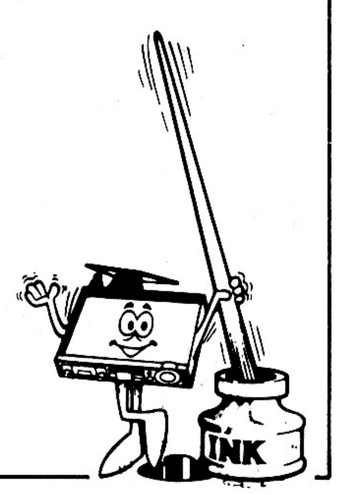

Wiring Sequence

31-72-100, 32-98-139-143-176, 71-97-137, 138-142, 99-175.

198. CAPACITANCE CHECKER

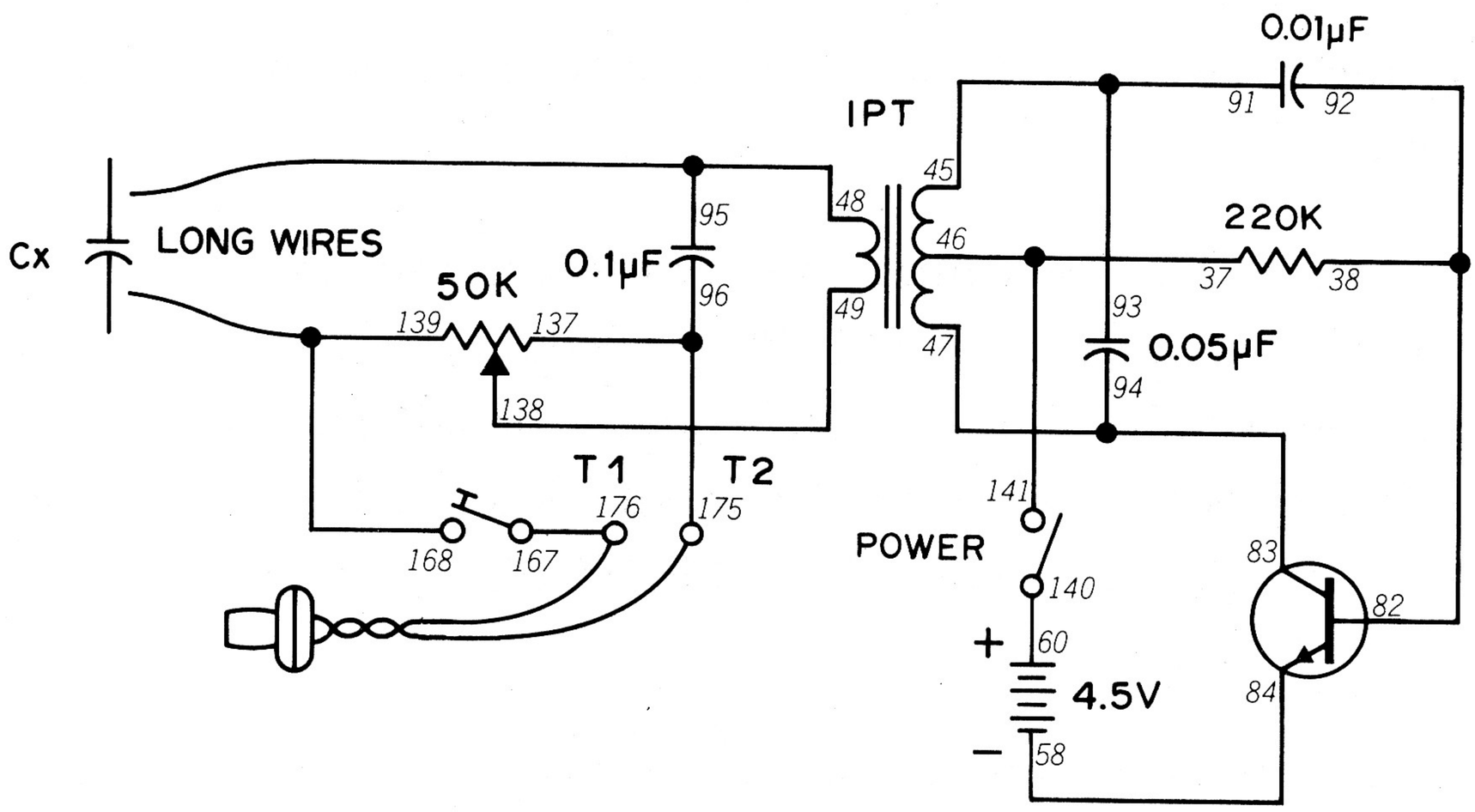

Very often electronics technicians have to find out the value of a capacitor. This Project will let you determine the value of a capacitor by sound.

To use this Project, connect the Earphone to Terminals 1 and 2. Then connect a capacitor to the two long wires. Press the Key and adjust the Control Knob until you get the least volume in your Earphone. Disconnect the capacitor. Note the setting of the Control Knob. Now measure some capacitors whose value you do know (like the others in your Kit). Compare the Control settings you get measuring known capacitor values with the setting you get measuring the unknown value. In this way you can get a fairly accurate idea what the value of the unknown capacitor is.

Make a chart or graph of the Control settings at different known capacitor values. In this way, you can use this circuit to test other capacitors whose values you're not sure of.

NOTES

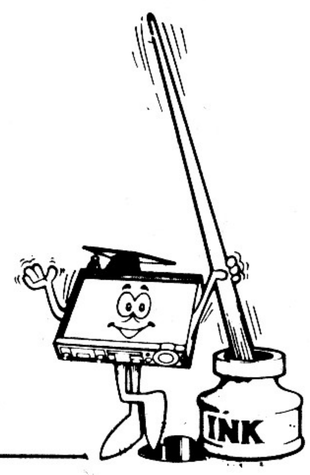

Wiring Sequence

38-82-92, 45-93-91, 46-37-141, 47-83-94, 48-95-LONG WIRE, 49-138, 58-84, 60-140, 137-96-175, 139-168-LONG WIRE, 167-176, T1-EARPHONE-T2

199. DIODE TESTER

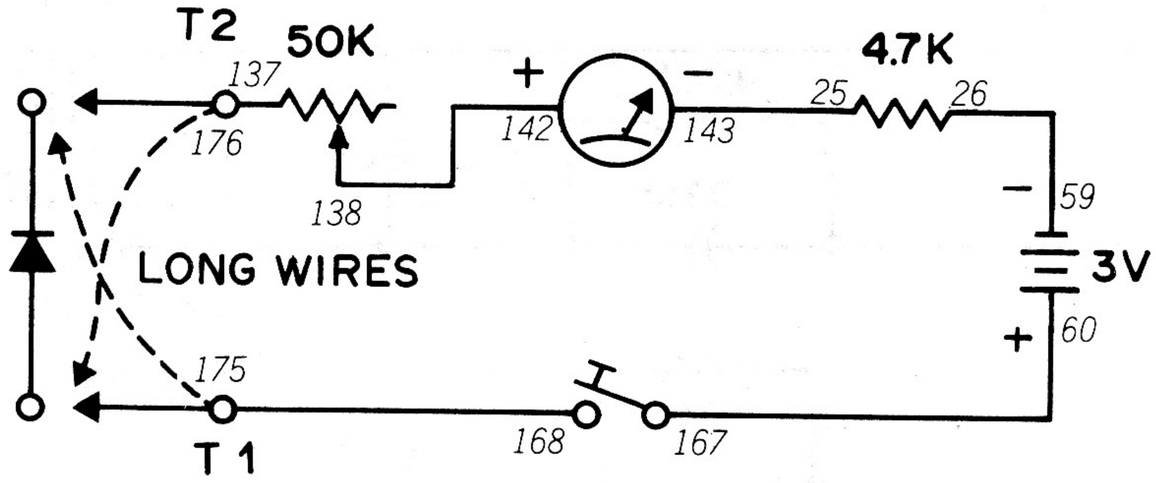

Back in Project 40 (*gee, was it that long ago?*) you found out that diodes only conduct electricity in one direction. If a diode conducts in both directions, it's no good. Unfortunately, you can't tell that just by looking at a diode ... but this Project will let you find out for sure.

To use this Project, connect the long wires to the diode you want to test. Press the Key and adjust the Control Knob so that the reading on the Meter is 10. If you can't adjust the Control so that the Meter reading is 10, reverse the long wires connected to the diode.

Once you adjust the Control so that the Meter reading is 10, reverse the connections to the diode. *Don't change the setting of the Control now.* Press the Key again. If the Meter reading is still 10, the diode is shorted out and can't be used. You might find that the Meter reading is above 1 but below 10 – this means that the diode is working poorly. But if the Meter reading is 1 or less, you have a good diode.

You'll find that good germanium diodes will produce readings of just below 1 on the Meter. Readings of almost zero are normal for properly operating silicon diodes.

You can also use this circuit to check out transistors. (Remember that transistors are actually diodes placed back to back – see Project 89.) You can measure the base to emitter and base to collector paths just like you measured diodes. If you get a Meter reading of just above zero, you know the path is okay.

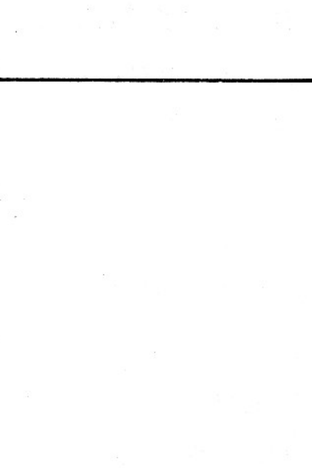

Wiring Sequence

25-143, 26-59, 60-167, 137-176, 138-142, 168-175, T1-LONG WIRE, T2-LONG WIRE

200. TRANSISTOR CHECKER

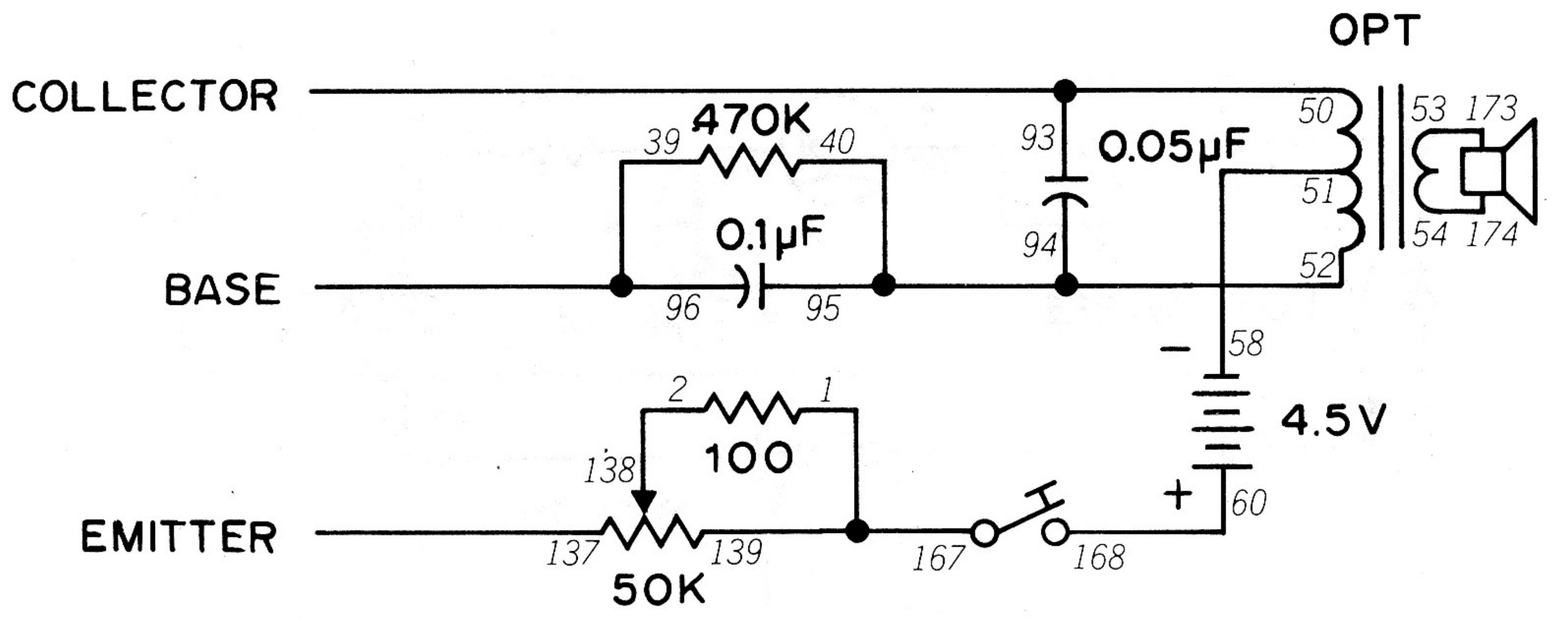

Transistors might well be the most common components you'll have to test. You can't tell if a transistor is working or not by looking at it ... but this Project will let you *hear* if it is. You can also tell if a transistor if NPN or PNP with this circuit.

You'll notice this Project has three long wires – one for the emitter, collector and base. The schematic shows this Project set up to check PNP transistors.

To use, connect the long wires to the base, collector and emitter of the transistor you want to test. Turn the Control Knob all the way to the left (counterclockwise) as far as you can without switching the power OFF. Press the Key and turn the Control to the right (clockwise). If you hear a sound from the Speaker, the transistor is a working PNP transistor. If you hear no sound at all, try reversing the connections made to terminals 58 and 60 and repeat the test. If you get a sound this time from the Speaker, the Transistor is a working NPN type. If you get no sound from the Speaker using either connection to terminals 58 and 60, the transistor is defective.

You'll notice that some transistors you might test will produce a sound from the Speaker at a lower Control setting than other transistors. These transistors have high amplification (or *high gain* as electronics engineers like to call it).

As you start to accumulate parts for other electronic circuits, you'll find this a handy circuit for testing unmarked transistors.

NOTES

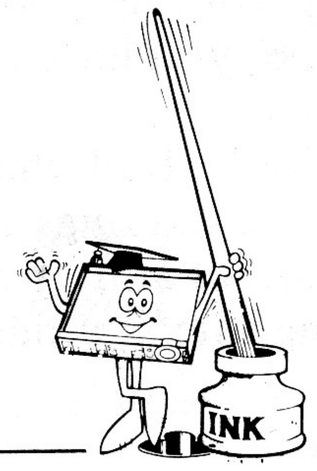

Wiring Sequence

1-139-167, 2-138, 39-96-LONG WIRE (BASE), 50-93-LONG WIRE (COLLECTOR), 51-58, 52-40-94-95, 53-173, 54-174, 60-168, 137-LONG WIRE (EMITTER).

EXPLORING ELECTRONICS ON YOUR OWN

Finished all 200 Projects? If so, congratulations—but that doesn't mean you have to be finished exploring electronics! In fact, you've only scratched the surface of what you can do with electronics.

Your local Radio Shack has everything you need to continue experimenting with electronics. One very handy item you should get is a modular breadboard socket (such as Radio Shack Catalog Number 276-174). A modular breadboard socket lets you build circuits by plugging parts into holes on the socket. You add wires between the parts, much like you did with this Kit. You can build and change circuits quickly and easily with a modular breadboard socket.

You'll also find ICs, resistors, capacitors, transistors, diodes and other components at Radio Shack. Radio Shack also has books about electronics. Some of these will describe circuits you can build and experiment with. Other books will help you increase your knowledge of electronics.

As you become more involved with electronics, you'll probably want to start a collection of electronic test equipment. One of the first items of test equipment you should get is a **multitester**. A multitester will let you measure voltage, current and resistance in electronic circuits. A multitester will probably be the most useful piece of test equipment you can own! Another handy item, especially if you build many digital circuits, is a **logic probe**. A logic probe tells whether the output of a circuit is low, high or switching back and forth between low and high.

You might decide to build some circuits into permanent, finished form. This means you'll want to add a **soldering iron** to your tools. Soldering is the method used to make electrical connections in radios, TVs, etc. You'll also find screwdrivers, pliers, wire cutters, etc., to be useful in your work. Your local Radio Shack also has metal cabinets and knobs to give your finished products a truly professional look.

Finally, don't forget your local public library. It has many good books and magazines about electronics. You'll find these books and magazines to be full of interesting circuits to build and play around with. This will also help you keep up-to-date with what's happening in electronics. *Remember, there's always something new in electronics!*

Continue keeping a notebook. You'll find it helpful whenever you need to find a certain circuit or understand what effect a change will have on a circuit. (Many electronics hobbyists have several notebooks full of circuits they've created.)

GOOD LUCK..... *AND HAVE FUN WITH ELECTRONICS!*

PARTS LIST

Antenna Holder
Bar Antenna 350μH with 5 leads
Battery Contact, Metal S (4)
Battery Contact, Metal W (4)
Bottom Case, Plastic
Capacitors
  100pF, ceramic disc type
  0.001μF, ceramic disc type
  0.005μF, ceramic disc type
  0.01μF, ceramic disc type
  0.05μF, ceramic disc type
  0.1μF, ceramic disc type
  3.3μF, 25-volt electrolytic type
  10μF, 16-volt electrolytic type
  100μF, 10-volt electrolytic type (2)
CdS Cell KC-5S
Frame, Plastic (L)
Frame, Plastic (R)
Digital Display PCB Assembly
  Consisting of:
    LED Digital Display LT-312
    PCB for Digital Display
Diode, Germanium, 1N60/HP80
Diode, Silicon, 1SS53/1N4148 (2)
Earphone, ceramic type
Front Panel, Plastic
Integrated Circuit, 7400
Integrated Circuit, 7476
Key Lever Contact, Metal Large
Key Lever Contact, Metal Small
Key Lever Holder, Plastic
Key Lever, Plastic
LED Holder, Plastic
Light Emitting Diode LN28RPE (6)
Light Emitting Diode JKL5153D or LTL 4203
Lug, 3mm (2)
Rear Frame, Plastic
Meter 250μA FS, 650 ohm
Nut 3 mm
Paper Panel
Lower Panel
PCB for 7400
PCB for 7476

PARTS LIST

Relay 9-volt, 225 ohm
Resistors
- 100 ohm
- 330 ohm (2)
- 470 ohm (3)
- 820 ohm (7)
- 1K ohm (4)
- 2.2K ohm
- 4.7K ohm (2)
- 10K ohm
- 22K ohm
- 33K ohm
- 47K ohm
- 100K ohm
- 220K ohm
- 470K ohm

Screw 2.6 x 4 mm (2)
Screw 3 x 6 mm (3)
Screw, Tapping, 3 x 8 mm (6)
Screw, Tapping, 3 x 6 mm (7)
Screw, Tapping, 2 x 4 mm (4)
Front Seal, Plastic
Slide Switch
Speaker 50 mm, 8 ohm
Spring, Medium (176)
Toothed Lock Washer
Terminal Knob (black), Plastic
Terminal Knob (red), Plastic
Transformer, Input (4K CT: 2K)
Transformer, Output (900CT: 8 ohm)
Transistors
- 2SA733PNP Si. (2)
- 2SC945 NPN Si. (2)

Knob, Control, Plastic
Knob, Tuning, Plastic
Variable Capacitor (tuning) 265pF
Variable Resistor (control) 50K-B with switch
Wires
- White, 75 mm (39)
- Red, 150 mm (20)
- Blue, 250 mm (15)
- Yellow, 350 mm (4)
- Green, 3m

InterTAN WARRANTY

InterTAN warrants that this product will be free from defects in materials and workmanship for a period of ninety (90) days from the date of purchase. Within this period, simply take the product and your proof of purchase to any InterTAN store or dealer and the product will be repaired without charge for parts and labour. InterTAN reserves the right to charge for transportation. Any product which has been subject to misuse or accidental damage is excluded from this warranty.

This warranty is only applicable to a product purchased through InterTAN's company owned stores and dealers and to a product that is presented for repair in a country where InterTAN offers the product for sale. While this warranty does not confer any legal rights other than those set out above, you may have additional statutory rights which will vary under the laws of the various countries, states, provinces and other governmental entities in which InterTAN operates. This warranty is subject to all statutory rights you may have in the country of purchase.

WE SERVICE WHAT WE SELL

MANUFACTURED IN CHINA IMPORTED FOR/IMPORTE POUR
InterTAN CANADA LTD. BARRIE, CANADA, L4M 4W5
InterTAN AUSTRALIA LTD. A.C.N. 002 511 944
InterTAN U.K. LTD., WEST MIDLANDS, WS2 7PS
TRADEMARK OF InterTAN INC.